2.2 TRUCK DATA - PNEUMATIC TIRE LIFT TRUCKS (OUTDOOR)

		FG15HC-17	FG15HT-17	FG18HT-17
GENERAL				
Power Type		Gasoline	Gasoline	Gasoline
Operation Type		Sit Down	Sit Down	Sit Down
Capacity @ 24 in. (600 mm) Load Center *	lbs. (kg)	3,000 (1,360)	3,000 (1,360)	3,500 (1,580)
Load Distance from Center Axle (2-Stage)	in. (mm)	15.8 (400)	15.8 (400)	15.8 (400)
Load Distance from Center Axle (3-Stage)	in. (mm)	15.9 (405)	15.9 (405)	15.9 (405)

PREVIEW - YOUFIXTHIS.COM

Blurred on purpose. The manual you buy has this page in full quality.

Download full manual at youfixthis.com

7.3 ENGINE

7.3.1 ENGINE REMOVAL

⚠ WARNING

Always lower the forks and any attachments to the ground, or remove them, before attempting the following operations. The lift truck will tip over forwards if the mast, carriage and forks, or attachment(s) are raised and the counterweight is removed.

⚠ WARNING

Block the wheels before proceeding with engine removal.

1. Disconnect the battery cables.
2. Disconnect wiring to the accelerator pedal and sensors.
3. Remove the overhead guard and the engine bonnet (hood).
4. Remove the counterweight.
5. Disconnect the wiring terminals and plugs shown below.

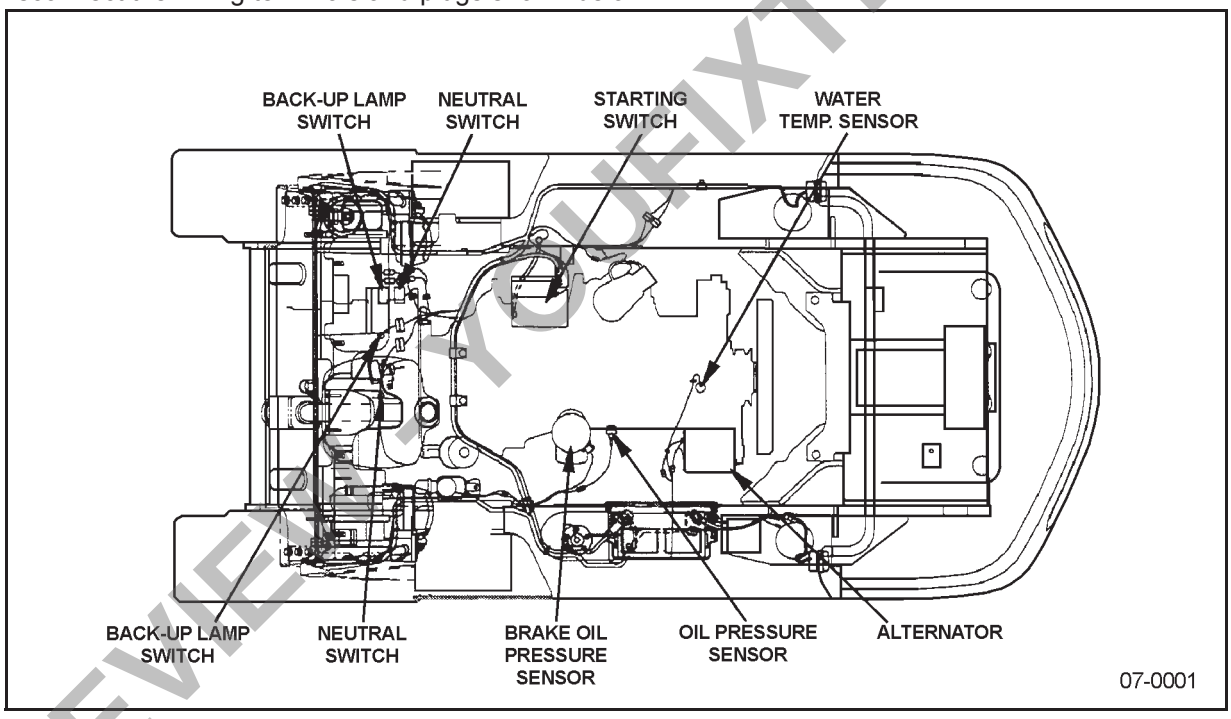

6. Drain the cooling system.
7. Disconnect all water hoses.
8. Disconnect hydraulic hoses to torque converter.
9. Plug hoses to hydraulic pump to prevent oil spillage.
10. Disconnect air cleaner and fuel hoses.
11. Plug fuel hoses to prevent fuel spillage.
12. Remove the radiator, the shroud and the exhaust pipe.
13. Remove pressure Plate Mounting Bolts (Clutch trucks)

PREVIEW - YOUFIXTHIS.COM

Download full manual at youfixthis.com

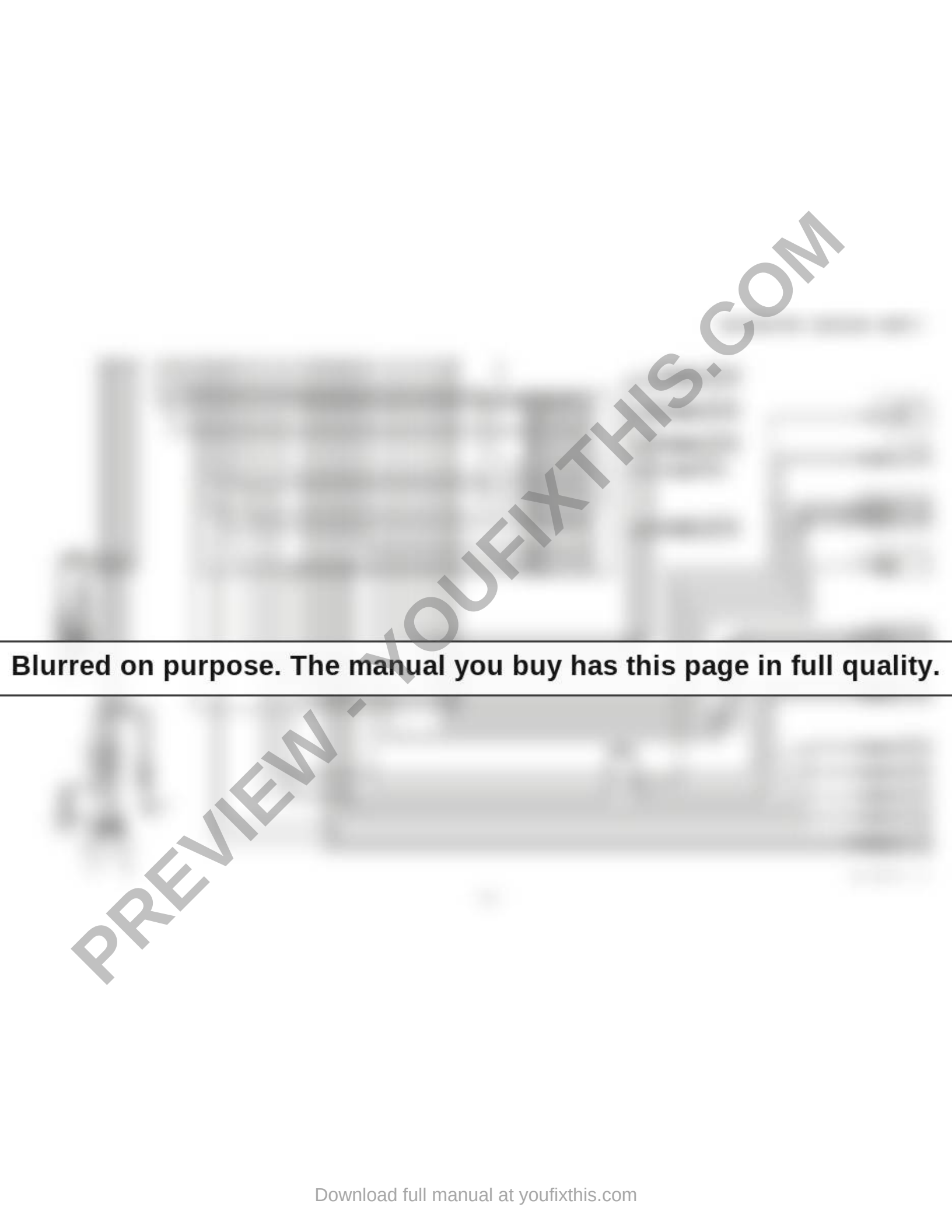

Blurred on purpose. The manual you buy has this page in full quality.

PREVIEW - YOUFIXTHIS.COM

Download full manual at youfixthis.com

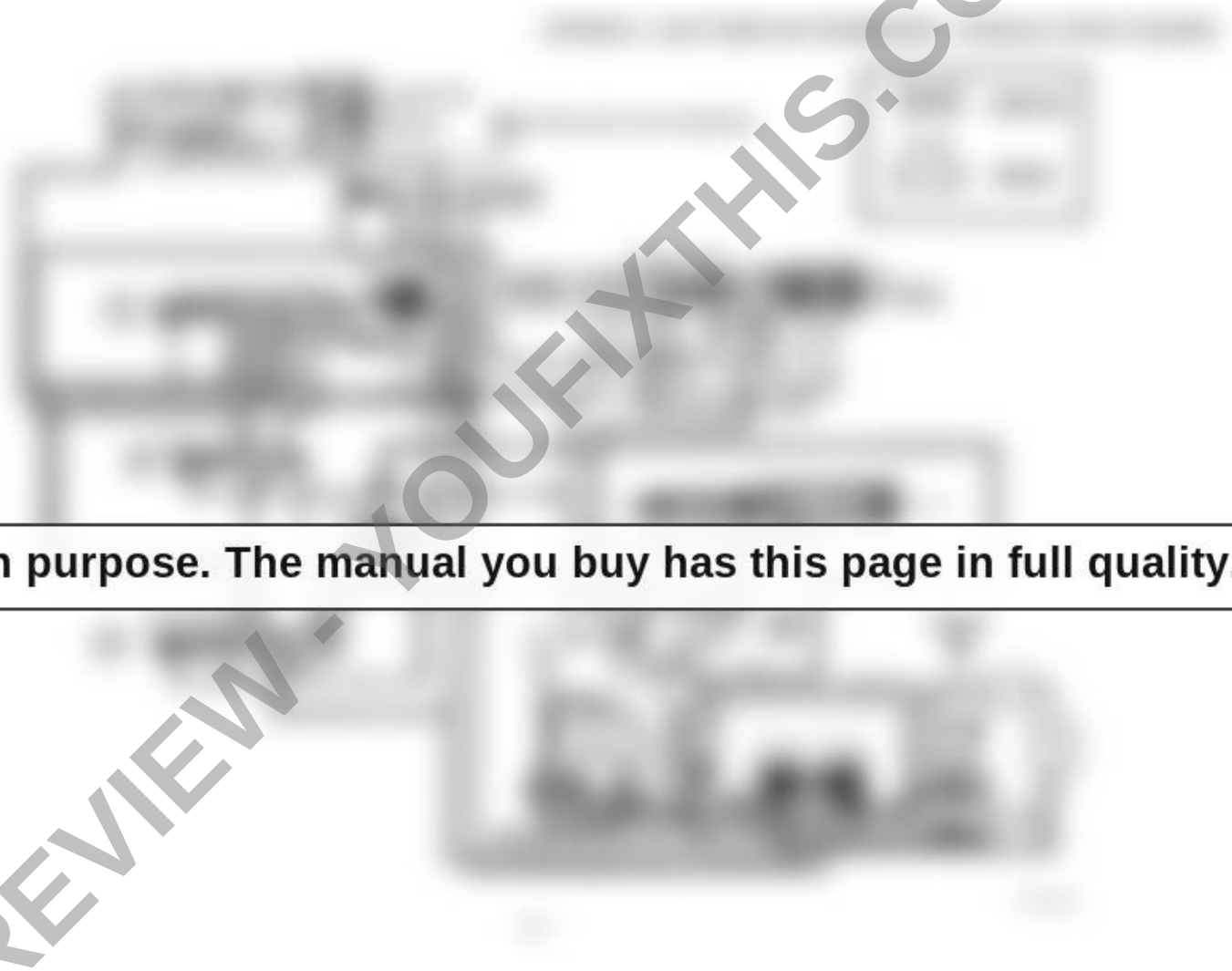

Blurred on purpose. The manual you buy has this page in full quality.

PREVIEW - YOUFIXTHIS.COM

Download full manual at youfixthis.com

APPENDIX 4 - TROUBLESHOOTING DIAGRAM - SHEET 1

The chart below shows common problems and abnormalities and their probable causes.

	Abnormality / Cause	Defective starting: Engine does not start	Defective starting: Engine starts but then stops – Exhaust gas: None	Defective starting: Engine starts but then stops – Exhaust gas: Little	Defective starting: Engine starts but then stops – Exhaust gas: Large amount	Lack of engine output – Exhaust gas color: Normal	Lack of engine output – Exhaust gas color: White	Lack of engine output – Exhaust gas color: Black	Defective exhaust gascolor – When operating: White	Defective exhaust gascolor – When operating: Black	Excessive knocking during combustion	Abnormal noise from engine	Variation in combustion noise	Hunting: When idling	Hunting: When operating	Excessive vibration of engine	Poor return to low speed	Excessive fuel consumption	Lubricating oil: Excessive consumption	Lubricating oil: Dilution of oil by fuel	Lubricating oil: Water in oil	Lubricating oil: Low oil pressure	Excessive blowby	Coolant: Overheats	Coolant: Low water temperature	Air supply: Pressure drops	Air supply: Pressure rises	Exhaust temperature rises	Remedy
Engine system	Defective intake, exhaust valve clearance	○	○			○						○														○		○	Adjust valve clearance
	Leakage of compression from valve seat					○		○		○		○					○					○				○		○	Grind valve seat
	Seizure of intake, exhaust valve	○			○	○		○		○				○	○				○			○				○			Correct or replace
	Blow-out from head gasket					○															○		○						Replace gasket
	Piston ring stuck or broken	○			○		○		○			○		○		○			○	○			○	○					○	Replace piston ring
	Wear of piston ring, piston, cylinder	○			○		○		○										○	○			○						Carry out honing or use oversize part
	Seizure of crankshaft pin bearing, shaft bearing	○	○									○		○	○	○							○						Repair or replace
	Defective positioning of piston ring end gap		○				○												○				○						Correct position of end gap
	Reverse assembly of piston ring						○		○										○				○						Correct assembly
	Wear of crankshaft pin and journal bearing					○						○		○	○	○						○							Measure and replace
	Loose connecting rod bolt											○				○						○							Tighten to specified torque
	Foreign substance in combustion chamber	○										○							○				○						Disassemble and repair
	Excessive gear backlash											○																	Adjust meshing of gear
	Wear of intake, exhaust valve guide						○												○				○						Measure and replace
	Defective governor		○											○	○	○	○												Repair and adjust
	Defective intake, exhaust valve timing	○					○	○	○	○		○																	Adjust valve clearance, check opening/closing timing of intake/exhaust valve
Cooling system	Excessive cooling by radiator								○									○											Defective thermostat (stays closed)
	Insufficient cooling by radiator							○															○					○	Defective thermostat (stays open), fan belt slipping
	Lack of coolant							○															○					○	Checkforwaterleakagefromcoolingsystem,cleancoolingsystem
	Cracked water jacket																				○	○	○						Repair or replace
	Loose fan belt							○															○					○	Adjust belt tension
	Defective thermostat							○	○														○	○					Check or replace

PREVIEW - YOUFIXTHIS.COM

Download full manual at youfixthis.com

1.1 SAFETY MANAGEMENT

WARNING — OPERATION MANUAL AND SAFETY LABELS

- Read the instructions in this Manual and the Safety Labels attached to the various parts of the lift truck, and make sure that you understand and follow them. If you do not understand or do not follow the instructions, this will lead to improper operation which may lead to damage, personal injury or death.
- Be sure that you understand the proper method of using the lift truck and the procedure for carrying out an inspection, and ensure that they are carried out safely.
- Read this Manual and the Safety Labels again from time to time. If the Operation and Maintenance Manual or Safety Labels have been lost or become dirty and cannot be read, obtain replacements from your Komatsu Forklift dealer and attach the Safety Labels in the specified positions.

WARNING — OPERATING QUALIFICATIONS

- This lift truck should be operated only by qualified personnel. Be sure you have proper qualifications before operating the lift truck.
- When operating this lift truck, even if you have experience in operating other lift trucks, obtain instructions from an authorized person who has experience in operating this lift truck or the same type of lift truck.

WARNING — CLOTHING AND PERSONAL PROTECTIVE ITEMS

- Avoid loose clothing, jewelry, and loose long hair. They can catch on controls or in moving parts and cause serious injury or death.
- Always wear a hard hat and safety boots.
- Depending on the working conditions, wear other safety equipment as well.

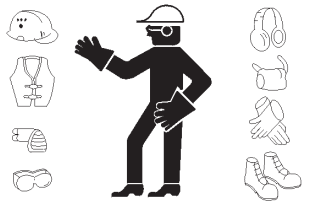
A0055010

WARNING — OVERHEAD GUARD, LOAD BACKREST

Do not use this lift truck unless it is equipped with the overhead guard and load backrest shipped with the lift truck from the factory by Komatsu Forklift.

WARNING — UNAUTHORIZED MODIFICATION

- Any modification made without authorization from Komatsu Forklift can create hazards.
- Before making any modification whatsoever, consult your Komatsu Forklift dealer. Komatsu Forklift will not be responsible for any damage, injury or death caused by any unauthorized modification.
- Do not install any equipment or parts which obstruct or limit the operator’s view.

PREVIEW - YOUFIXTHIS.COM

Download full manual at youfixthis.com

5.3 INSPECT AIR CLEANER ASSEMBLY 5-2
5.3.1 Cleaning the Filter Element 5-2
5.4 INSPECT FOR LOOSE CYLINDER HEAD MOUNTING BOLTS & RE-TORQUE 5-3
5.5 INSPECT ENGINE MOUNTS 5-3
5.6 INSPECT THE ENGINE LUBRICATING SYSTEM 5-3
5.7 INSPECT ENGINE FUEL SYSTEM 5-3
5.8 INSPECT LPG VAPORIZER FOR TAR BUILDUP (EVERY MONTH) 5-4
5.9 INSPECT THE BLOW-BY GAS RECIRCULATION SYSTEM 5-4
5.10 INSPECT COOLING SYSTEM AND RADIATOR 5-5
5.11 INSPECT CHARGING SYSTEM WIRING 5-5
5.12 INSPECT LPG VAPORIZER FOR TAR BUILDUP (EVERY MONTH) 5-5
5.13 INSPECT THE BLOW-BY GAS RECIRCULATION SYSTEM 5-6
5.14 INSPECT COOLING SYSTEM AND RADIATOR 5-7
5.15 INSPECT CHARGING SYSTEM WIRING 5-7
5.16 INSPECT STEERING 5-8
5.17 INSPECT STEERING WHEEL 5-8
5.18 INSPECT THE POWER STEERING SYSTEM 5-8
5.18.1 Power Steering Oil Pressure 5-8
5.19 INSPECT BRAKE SYSTEM RODS, CABLES AND LINKS 5-8
5.20 INSPECT BRAKE PIPING AND CONNECTIONS 5-9
5.21 INSPECT BRAKE MASTER AND WHEEL CYLINDERS 5-10
5.22 INSPECT BRAKE SHOES AND ASSOCIATED PARTS 5-10
5.23 INSPECT BRAKE DRUMS 5-10
5.24 INSPECT BRAKE BACKING PLATES 5-11
5.25 INSPECT LOAD FORKS 5-11
5.26 INSPECT MAST 5-11
5.27 INSPECT FORK CARRIAGE 5-12
5.28 INSPECT LIFT CHAINS 5-12
5.29 INSPECT CHAIN WHEELS 5-13
5.30 INSPECT ATTACHMENTS 5-13
5.31 INSPECT HYDRAULIC TANK 5-13
5.32 INSPECT CHASSIS AND ATTACHMENT PIPING 5-13
5.33 INSPECT HYDRAULIC PUMP 5-13
5.34 INSPECT LIFT CYLINDER 5-13
5.35 INSPECT TILT CYLINDERS 5-13
5.36 INSPECT ATTACHMENT CYLINDERS (IF EQUIPPED) 5-14
5.37 INSPECT LIFT TRUCK CHASSIS AND FRAME 5-14
5.38 INSPECT CAB (IF EQUIPPED) 5-14
5.39 INSPECT THE OPERATOR'S SEAT 5-14
5.39.1 Vehicle Controller 5-14
5.39.2 Tusk Operator Present System TOPS) 5-14
5.39.3 Controller Troubleshooting 5-16
5.40 INSPECT EQUIPMENT USED FOR ACCESSING THE LIFT TRUCK 5-18
5.41 INSPECT DISPLAY PANEL 5-18
5.42 INSPECT OVERHEAD GUARD 5-18
5.43 INSPECT LIGHTS, GAUGES AND WARNING DEVICES 5-18
5.44 INSPECT REAR VIEW MIRROR AND REFLECTORS 5-18

6. MAINTENANCE OPERATIONS

6.1 LUBRICANT LIST 6-2
6.2 CHANGE ENGINE OIL AND FILTER - GASOLINE/LP ENGINES 6-4
6.3 DIFFERENTIAL CASE 6-5
6.3.1 Checking Differential Oil Level 6-5
6.3.2 Changing Differential Oil 6-5
6.4 TORQFLOW TRANSMISSION CASE 6-5

PREVIEW - YOUFIXTHIS.COM

Download full manual at youfixthis.com

WARNING **SPEED AND ACCELERATION**

If a stationary object is not subjected to external force, it will remain stationary. In the same way, if a moving object is not subjected to external force, it will continue to move at the same speed. This is called inertia.

Because of inertia, a force is applied towards the rear when the lift truck starts to move, and is applied towards the front when the lift truck stops. If the brakes are applied suddenly, there is danger of a large force being applied towards the front which may make the lift truck tip or the load come off the forks.

When the lift truck is turned, a centrifugal force is applied to the outside from the center of the turn. This force pushes the lift truck to the outside and makes it tip. The range of stability to the left and right is particularly small, so it is necessary to reduce speed when turning, in order to prevent the lift truck from tipping. If the lift truck is traveling with a raised load, the position of the overall center of gravity is high, so the danger of tipping to the front, left or right becomes greater.

PREVIEW - YOUFIXTHIS.COM

Download full manual at youfixthis.com

5.20 INSPECT BRAKE PIPING AND CONNECTIONS

1. Check brake piping, fittings and connections for damage, brake fluid leakage, contact with other truck parts and loose or missing mounting bolts.
2. Repair or replace parts as necessary.
3. Be sure to check brake fluid levels if leakage is found.

PREVIEW - YOUFIXTHIS.COM

Download full manual at youfixthis.com

7.12.1 DISASSEMBLE CLUTCH RELEASE CYLINDER

1. Remove boot from cylinder.
2. Remove piston assembly from cylinder.

⚠ CAUTION

- **Be careful not to damage the cylinder, piston or cup.**
- **When carrying out disassembly, make sure you understand the structure of the cylinder and lay the disassembled parts out in order.**
- **Do not disassemble the piston assembly.**
- **Do not push on the outside wall of the cylinder with a vise.**
- **If it is difficult to remove the piston, put a block against the end face of the cylinder, then pump in low pressure air gradually from the discharge port.**

Part Name	Check Item	Corrective Action
Cylinder	Scratches, uneven wear, corrosion of inside surface	• Remove small scratches with fine grit sandpaper • If scratches will affect sealing surface, replace the entire cylinder
Piston	Scratches, uneven wear, corrosion of sliding portion	• Remove small scratches with oilstone • If scratches will affect the cylinder and cup, replace the entire piston assembly
	Clearance between cylinder and piston	• Replace if clearance is greater than 0.006 in. (0.15mm)
Cup 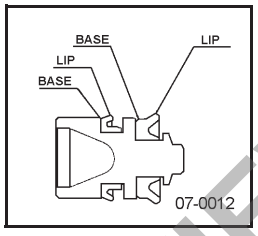	Scratches on lip	• If any scratches are visible, replace entire piston assembly
	Pitting of base	• If pitting is harmful, replace entire piston assembly
	Wear, swelling	• If there is any abnormal deterioration, wear or swelling, replace the entire piston assembly
	Interference	• If the value is below the service limit specification of 0.016 in. (0.4mm), replace the piston assembly. • Note that the cup is a specified periodic replacement part. It is safer to replace this part at every disassembly.
Spring	Scratches, wear, inclination	• Replace if there is marked damage
	Free length	• Replace if it is less than the service limit of 1.497 in. (38mm)
Bleeder Valve	Scratches, deformation of seat surface	• Replace if there is marked damage or deformation
Bleeder Cap	Cracks, deterioration	• Replace if there are visible cracks or deterioration
Push Rod	Curvature, deformation	• Replace if bent or deformed

PREVIEW - YOUFIXTHIS.COM

Download full manual at youfixthis.com

WHEEL BRAKE SPECIFICATIONS

Check Item	Criteria		Corrective Action
	Standard Size	Repair Limit	
Brake Lining Thickness	0.177 in. (4.5mm)	.08 in. (2.0mm)	Replace Parts
Return Spring Deterioration	Static Length 3.82 in. (97mm)	4.14 in. (105mm)	
Return Spring Hook Thickness	.102 in. (2.6mm)	.08 in. (2.0mm)	
Piston-to-Wheel Cylinder Clearance*	0 - .002 in. (0 - .05mm)	.008 in. (0.2mm)	

* Check inner sliding surface (bore) of wheel cylinder for scratches and check cups for deterioration.

7.19.3 ASSEMBLE WHEEL BRAKE

1. Install Brake Backing Plate

   a. Slide the assembly guide over the axle shaft.
   b. Slide the backing plate over the assembly guide.
   c. Align the backing plate mounting holes with the holes in the hub.

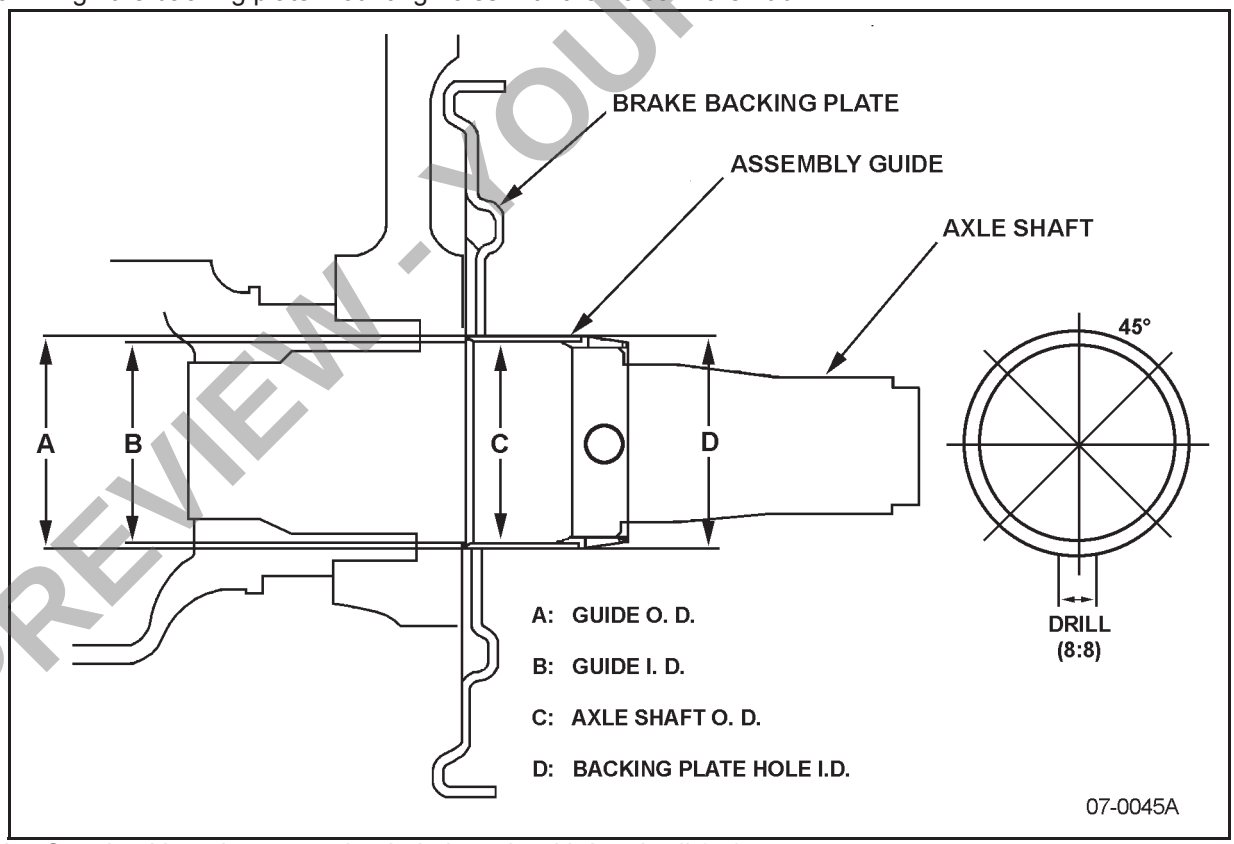

   d. Coat backing plate mounting bolt threads with Loctite # 271.

torque

Torque the mounting bolts to **115.8 - 144.5 lbs./ft (157 - 196 Nm) (16 - 20 kgfm).**

PREVIEW - YOUFIXTHIS.COM
Download full manual at youfixthis.com

Accordingly, if the **inching rod** is further pressed in to the right, the hydraulic pressure lowers by a factor corresponding to the increase of the return spring force. In this way, hydraulic pressure corresponding to the pedal stroke is achieved.

- If the rod is pressed in to the right further, the force of the **return spring** is balanced with the compression spring force (Point (b) in the figure below), and the clutch pressure is out of the control range.

When Clutch Pressure is Turned Off

- In the range from Point (b) to Point (c) in the illustration at right, port (G) is closed and fluid is not supplied to the **selector valve** and **modulator valve**.

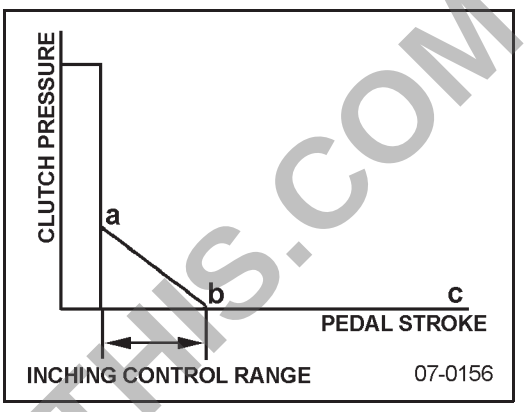

Modulator Valve

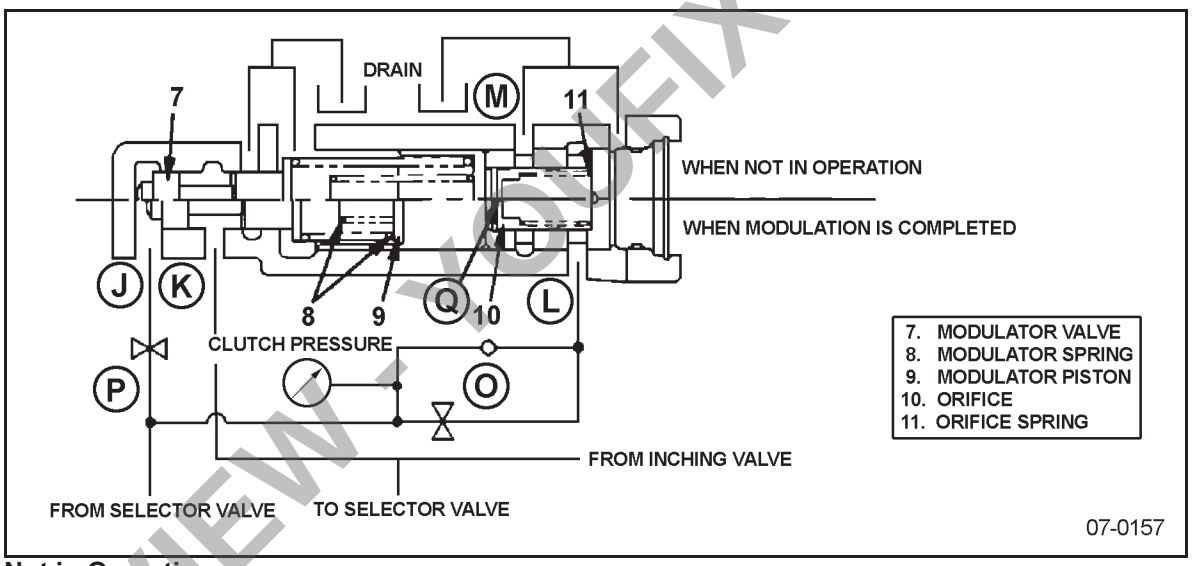

When Not in Operation

- The **modulator valve** is set as shown in the illustration above, and fluid flows from the inching valve port (K).

When in Modulation Mode

- If the gear is shifted to F or R, the fluid from the **selector valve** flows through orifice (P) to port (J). Modulation then begins as shown at Point (d) in the figure below.
- At the same time, the divided fluid flows through orifice (O) to port (L), and then through orifice (Q) made into the orifice valve to the head of the **modulator piston**. Since this fluid moves the **modulator piston** toward the **modulator valve** gradually, the **modulator spring** force increases and the modulation pressure rises gradually.
- Finally, the **modulator piston** makes contact with the **modulator valve** (as shown in the lower half of the above illustration) and the modulation operation is finished (Point (e) in the figure below).
- The time to perform the above operation (modulation time) is controlled with orifices (P) and (Q).

Download full manual at youfixthis.com
PREVIEW - YOUFIXTHIS.COM

PREVIEW ONLY

You're viewing 12 of 248 pages

The full manual includes:

- All 248 pages, complete
- Searchable PDF (find any keyword)
- No watermarks
- Instant download
- Print-ready quality

GET FULL MANUAL NOW

Komatsu FG15HC-17, FG15HT-17, FG15HTLS-17, FG15ST-17, FG15STLS-17, FG18HT-17, FG18HTLS-17, FG18ST-17, FG18STLS-17, AX20, FG15/18ST(LS)-17, FG15/18HT(LS)-17 Service Manual

Scan or click anywhere
youfixthis.com

Click anywhere on this page to get the full manual