REMOVAL AND INSTALLATION OF UNITS

REMOVAL AND INSTALLATION OF UNITS

Remove and install the following units as explained in the flow chart in the previous section.

1. MAST

REMOVAL

Forks — Piping — Tilt cylinder pin — Mast support cap

1. Piping

Raise the fork carriage to make it easy to remove the piping. Remove the piping and the return hose from the control valve.

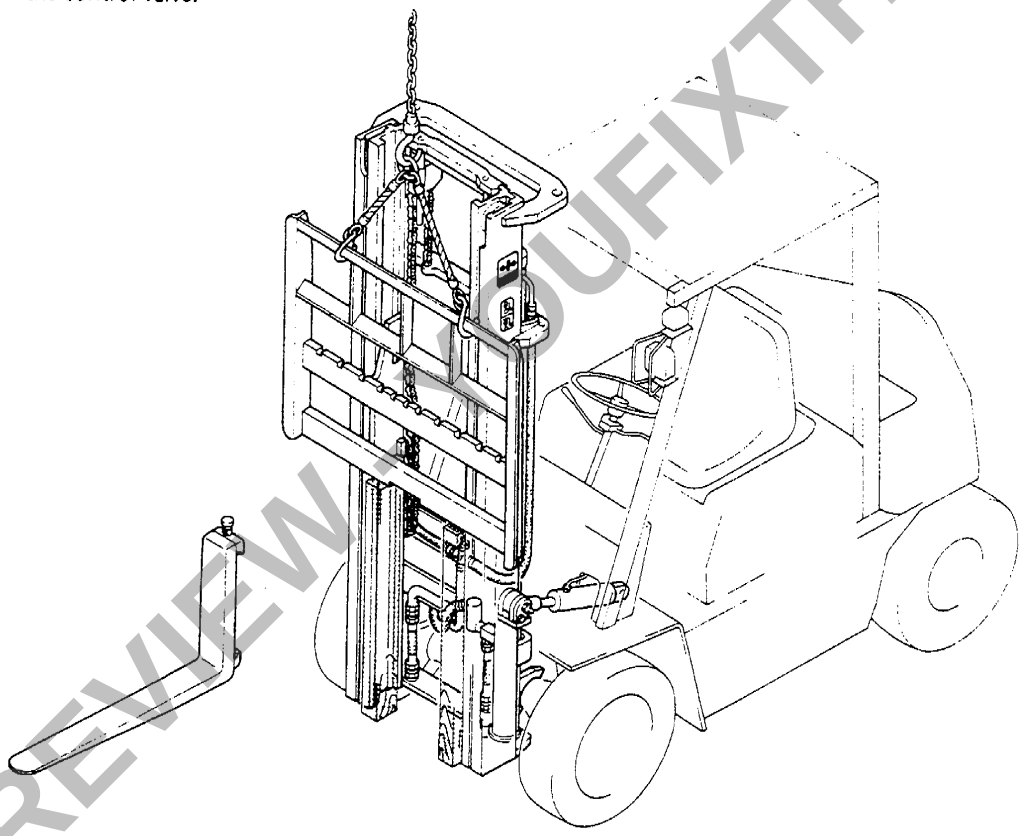

kg

Unit: kg (lb)

3 m Mast		4 m Mast		4.5 m Mast		5 m Mast	
2, 2.5 tons	3.0 tons	2, 2.5 tons	3.0 tons	2, 2.5 tons	3.0 tons	2, 2.5 tons	3.0 tons
660 (1460)	820 (1810)	765 (1690)	815 (1800)	815 (1800)	865 (1910)	880 (1940)	925 (2040)

PREVIEW - YOUFIXTHIS.COM

Download full manual at youfixthis.com

STANDARD TIGHTENING TORQUE FOR BOLTS

TIGHTENING TORQUE when using torque wrench or spana shall be in accordance with Table. This torque shall be used when TIGHTENING TORQUE of espacially narrow range is required.

1. In the case of using impact wrenches or spanners

Unit: kgm (Nm) [ft.lb]

2. In the case of using torque wrenches

Unit: kgm (Nm) [ft.lb]

PREVIEW - YOUFIXTHIS.COM

Blurred on purpose. The manual you buy has this page in full quality.

Download full manual at youfixthis.com

WIRING DIAGRAM

H20, C240 Engine

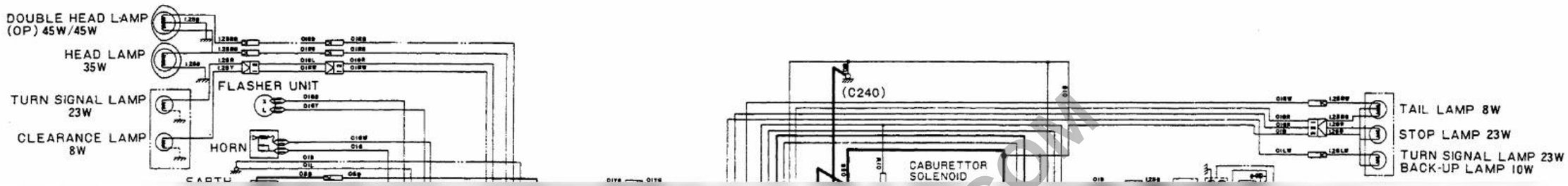

Blurred on purpose. The manual you buy has this page in full quality.

PREVIEW - YOUFIXTHIS.COM

Download full manual at youfixthis.com

HYDRAULIC SYSTEM

GENERAL

The hydraluic system consists of the hydraulic pump, control valve, tilt cylinder and lift cylinder. There is a suction strainer installed at the outlet port of the hydraulic tank and a line filter installed at the inlet port.

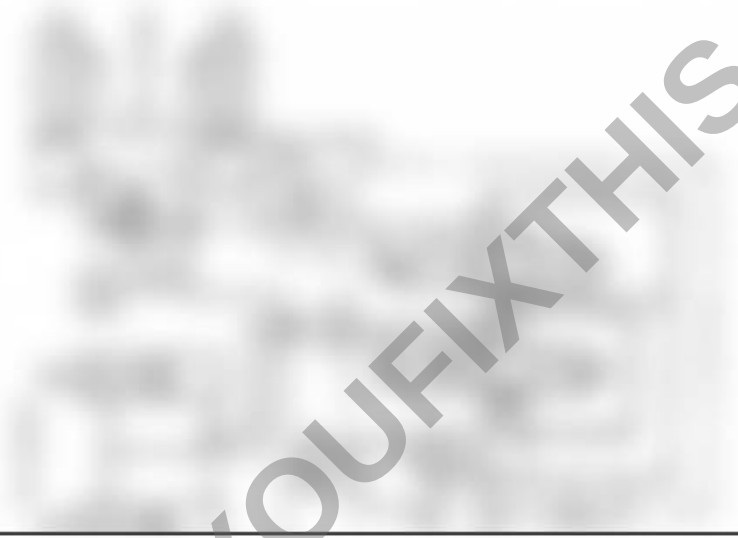

Blurred on purpose. The manual you buy has this page in full quality.



PREVIEW - YOUFIXTHIS.COM

Download full manual at youfixthis.com

ENGINE

Trouble symptom	Probable cause	Remedy
Oil pressure caution lamp fails to go out.	• Low oil level in oil pan. • Oil filter element clogged. • Loose or worn oil pipe joint leaks oil.	• Add oil. • Replace element. • Check and repair
Radiator pressure valve spouts steam.	• Lack of cooling water or water leakage. • Loose fan belt. • Dust and scale accumulated in cooling system.	• Add water or repair. • Adjust belt. • Change water and clean the interior of cooling system.
Water temp. gauge indicates black range, on right.	• Radiator fin clogged or fin damaged. • Thermostat or water temp. gauge faulty. • Radiator filler cap loosening.	• Clean or repair. • Replace. • Retighten cap or replace packing.
Water temp. gauge indicates black range, on left.	• Thermostat faulty. • Water temperature gauge faulty.	• Replace • Replace
Engine fails to start.	• Lack of fuel. • Air mixed in fuel system. • Fuel injection pump or nozzle defective. • Starting motor rotates slowly. • Engine compression insufficient. • Valve clearance out of adjustment.	• Add fuel. • Repair. • Replace. • See "Electrical system." • Adjust clearance.
Engine emits whitish or bluish smoke.	• Excessive quantity of oil in oil pan. • Poor quality of fuel.	• Reduce oil quantity. • Replace with specified fuel.
Engine emits blackish smoke.	• Air cleaner element clogged.	• Clean or replace element.
Irregular fuel feeding sound heard.	• Fuel feed pump faulty.	• Replace pump.
Abnormal sound heard. (Fuel combustion or mechanical sound)	• Poor quality of fuel. • Overheating. • Muffler interior damaged. • Excessively large valve clearance.	• Replace with specified fuel. • See Symptom "Radiator pressure valve spouts steam". • Replace • Adjust clearance.

PREVIEW - YOUFIXTHIS.COM

Download full manual at youfixthis.com

SPECIFICATIONS

Item			Model	FG20C-8	FG20T-8	FG20T2-8	FG20KC-8	FG20KT-8
Performance	Capacity		kg (lb)	2000 (4400)				
	Load center		mm (in)	500 (20)				
	Max. fork height		mm (in)	3000 (118)				
	Free lift		mm (in)	330 (13.0)				
	Tilting angle	FWD/BWD	degree	6/12				
	Lifting speed, Loaded/Unloaded		mm/s (FPM)	480/530 (94/104)			410/440 (81/87)	

PREVIEW - YOUFIXTHIS.COM

Blurred on purpose. The manual you buy has this page in full quality.

Download full manual at youfixthis.com

FOREWORD

Proper operation, maintenance, troubleshooting and repairs are necessary to preserve the performance of vehicles and engines (engine-powered forklift trucks) over a long period of time and to ensure that fault and breakdowns do not occur.
The object of this Shop Manual is to provide the information necessary especially in connection with the performance of inspections and repairs mainly in the maintenance areas.
For this purpose, it includes sections on "General Specifications", "Checks and Adjustments", "General Disassembly and Assembly", "Disassembly and Assembly of Components" and the "Electrical System".
Maintenance data necessary for the performance of maintenance on the machines is also included, but reference should be made to the Operation and Maintenance Manual for further details.
Reference should also be made to this manual in connection with correct operation of the machine.

The content of the items mentioned above is as follows.

General and Specifications
This chapter indicates the name of each part of the machine, and the installation positions of the operating devices and instruments.

Checks and Adjustments
This chapter gives the details required for the disassembly and reassembly of machines such as tightening torque, allowances, as well as the wear limits of the parts. However, when necessary, data in line with the procedure mentioned in the following sections, "General Disassembly and Assembly" and "Disassembly and Assembly of Components" is indicated.

General Disassembly and Assembly
The procedure when disassembling a machine comes within one of the two following categories. In the first, the machine, including the frame, is made up roughly of seven component parts, i.e.: a mast section, a cylinder section, a reach leg, a transfer section, a motor section, a pump section and a frame.
This chapter contains details of how to disassemble and assemble these components. The other category of disassembly and assembly is the disassembly and assembly of component parts referred to in the following chapter.

Disassembly and Assembly of Components
This chapter provides additional explanation concerning those of the seven component parts, as touched upon in the preceding chapter, whose disassembly procedure is particularly complicated and for which special care is needed when adjusting. Mention is also made of the functions and structures of the component parts.

Electrical system
Explanation is provided in this chapter of the electrical parts used inside the machine. Troubleshooting when a breakdown occurs is also described.

Reference should be made to the "General Shop Manual" for safe oprating and working methods which serve as the basis for the performance of repair and inspection works on machines.

PREVIEW - YOUFIXTHIS.COM

Download full manual at youfixthis.com

REMOVAL AND INSTALLATION OF UNITS

3. Power steering piping, brake piping

Disconnect the power steering piping at the hose at the gear box end. Disconnect the brake piping at the pipe at the wheel cylinder end.

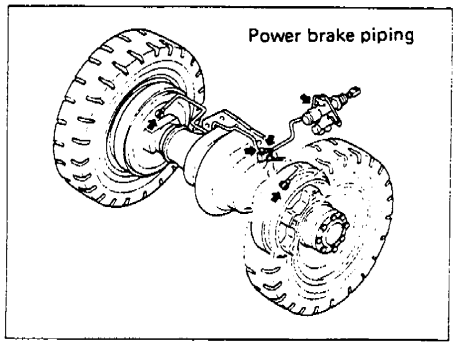

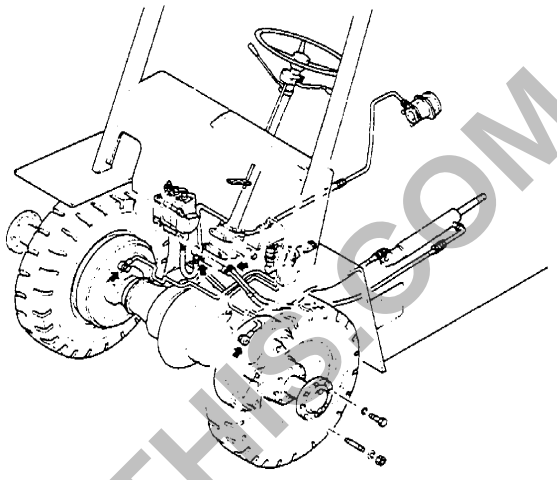

4. Pedal bracket assembly

Remove the return spring and inching pedal link joined to the pedal bracket. Remove three mounting bolts installing to the transmission case, then remove the pedal bracket assembly.

★ Do not remove the stopper bolt or the rod of the inching pedal link.

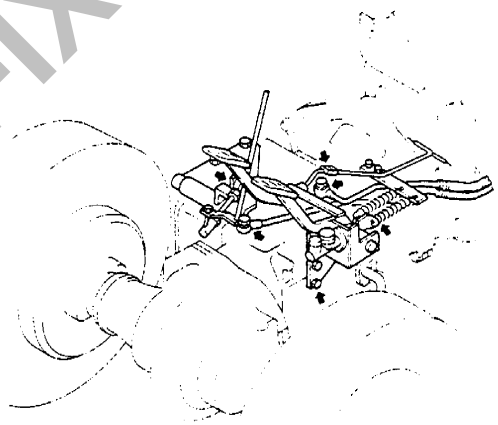

5. F-R, H-L levers (clutch type trucks)

The F-R and H-L levers are secured to the shaft by a taper pin, so remove the nut and tap the pin out from the mast side. Remove the F-R lever first.

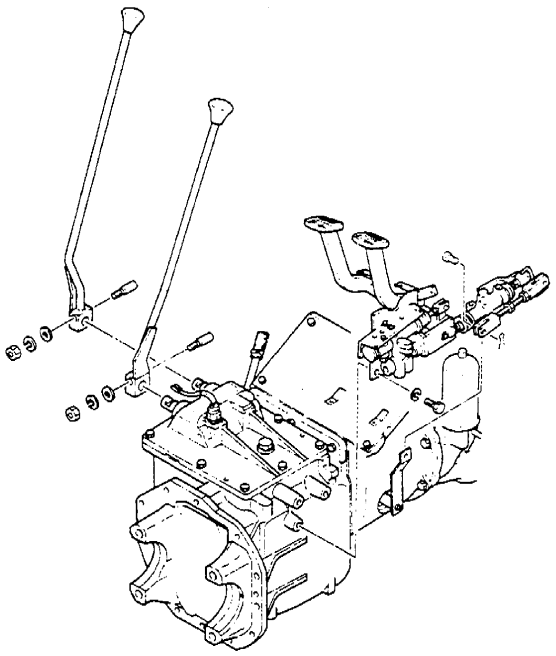

PREVIEW - YOUFIXTHIS.COM

Download full manual at youfixthis.com

2. Adjusting pinion shaft with shims

1) First calculate shim thickness.
2) Assemble calculated shim thickness and check tooth contact.
3) If correct tooth contact is not obrained, adjust shim thickness.
4) Adjust shim thickness to give tooth contact (bebel gear) shown below.

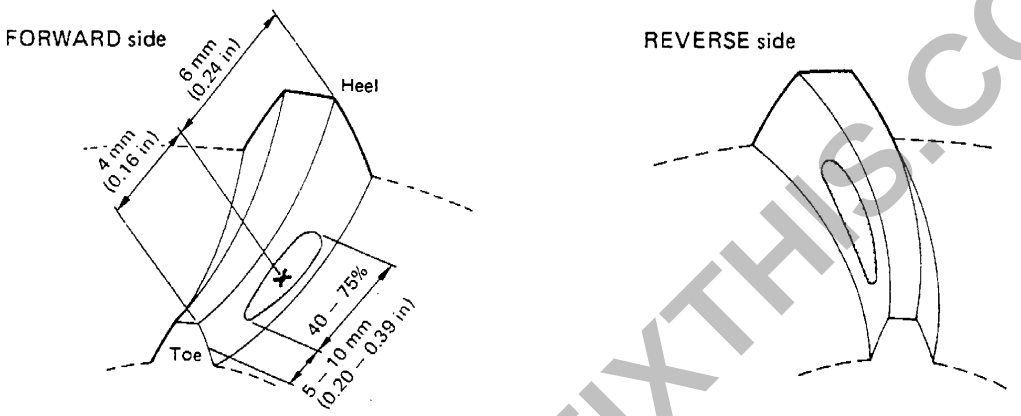

5) See next page for details of adjusting shim thickness and checking tooth contact.

Procedure for adjusting shim thickness

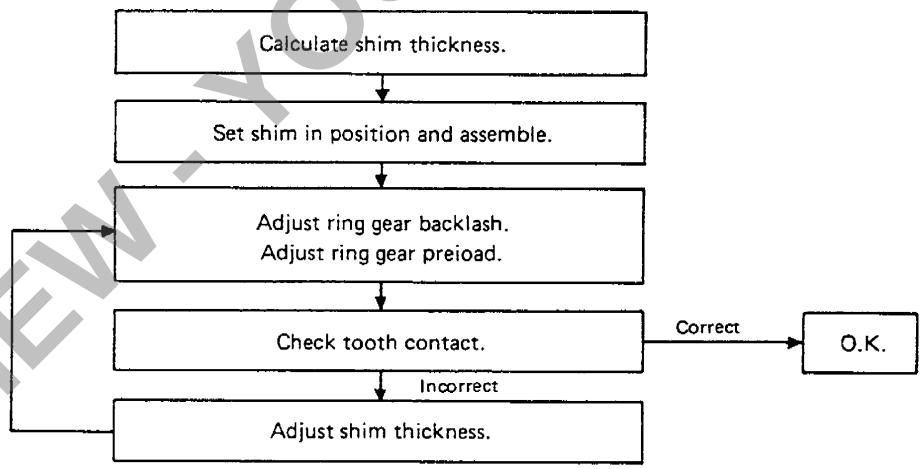

★ **If there is any problem with either the pinion shaft or the bebel gear, always replace both as a set.**

PREVIEW - YOUFIXTHIS.COM
Download full manual at youfixthis.com

DIFFERENTIAL

STRUCTURE

- A 4-pinion type is used.

Type	Hypoid bevel type
Reduction ratio	6.500
Oil capacity*	6.0 ℓ (1.4 gal US)

*: Differential only

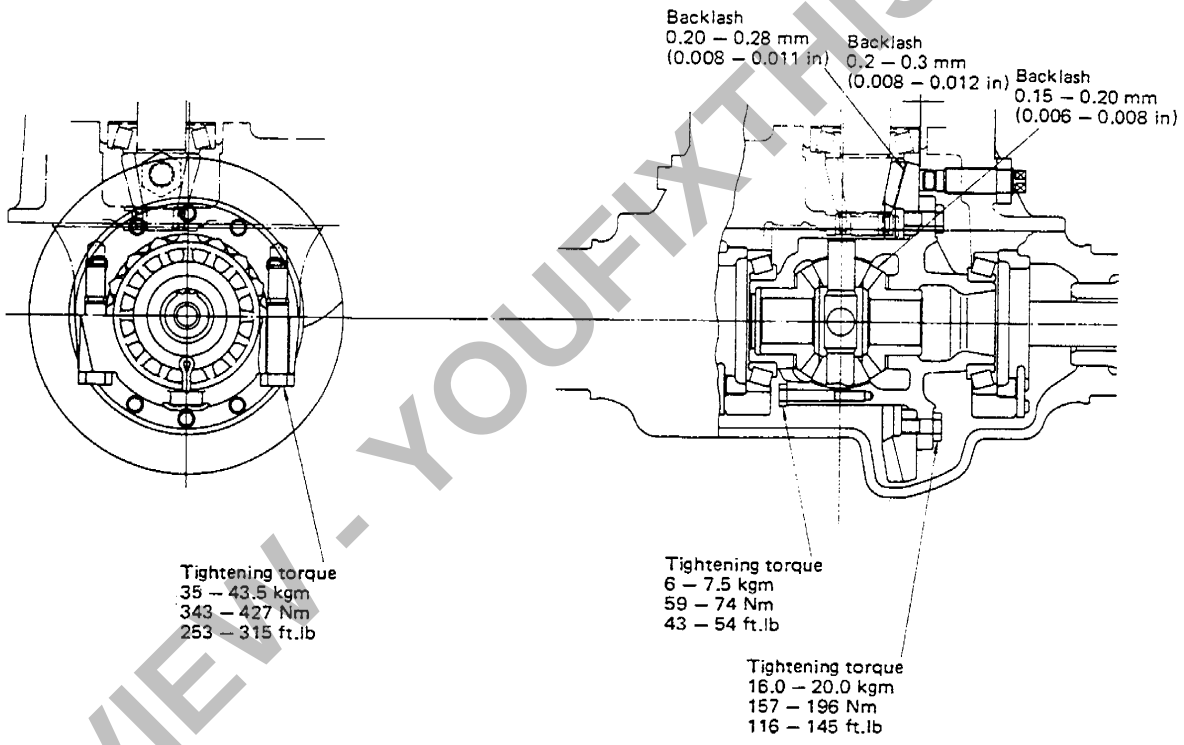

PREVIEW - YOUFIXTHIS.COM

Download full manual at youfixthis.com

ASSEMBLY OF ACCUMULATOR

1. Coat the outside of the piston and rod with silicon grease. Coat the O-rings for the piston and rod with the same silicon grease.
   ★ Be careful to have the O-rings and back-up ring facing in the right direction.
   ★ After tightening, check the position of the back-up ring.

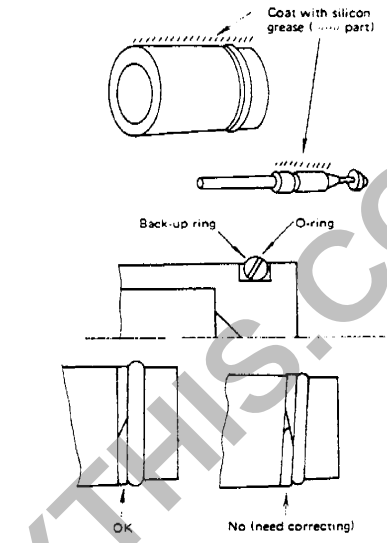

2. Coat the other O-rings with hydraulic oil and install.

3. Coat cylinder bore of body with hydraulic oil.

4. Except where otherwise stated, assemble in the reverse order to disassembly.
   ★ Always install the switch rod before installing the switch.

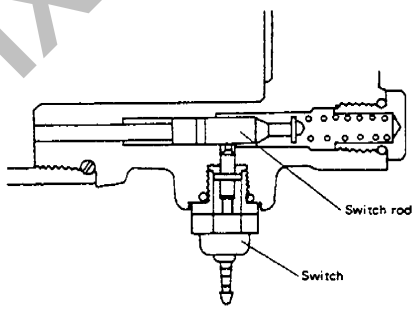

5. Tighten all parts to the torques given in the diagram.

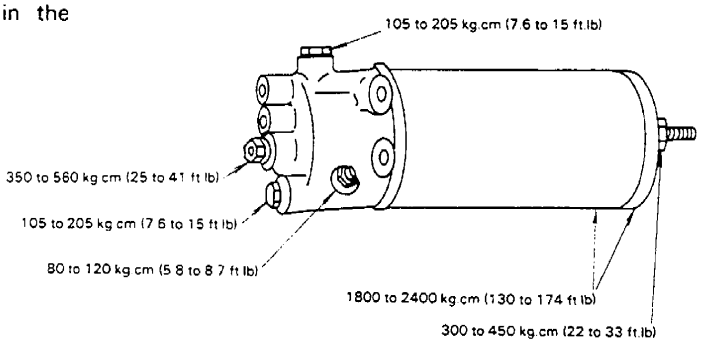

Reference:
When tightening the plug, it can be set as shown in the diagram and the torque fixed.

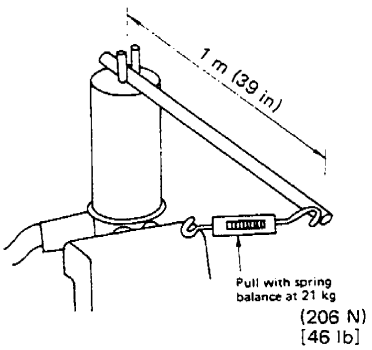

PREVIEW - YOUFIXTHIS.COM
Download full manual at youfixthis.com

Trouble symptom	Probable cause	Remedy
	Valve • Faulty. (Unbalanced oil pressure) Piping • Pipe (from tank to pump) dented or clogged. △ Pipe (from pump to power steering cylinder) dented or clogged. △ Insufficient air bleeding.	 • Adjust valve set pressure and check specified oil pressure. • Repair or replace. • Repair or replace. • Bleed air completely.
8. Oil pump makes abnormal sounds during operation.	Oil pump • Lack of oil. • High oil viscosity. • Oil inlet pipe sucks air. △ Pump lacking in capacity or deteriorated in characteristic. Piping • Pipe (from pump to power steering cylinder) dented or clogged. • Insufficient air bleeding.	 • Add oil. • Change to specified viscosity of oil. • Repair. • Replace or repair.
9. Oil spouts from oil tank.	Oil pump △ Air suction which causes oil leakage. △ Oil inlet pipe sucks air. Valve • Faulty. (Valve left opened, no oil being fed to power steering cylinder.) △ Faulty. (Unbalanced oil pressure) Piping • Mistaken installation of low-pressure pipe and high-pressure pipe. • Pipe (from tank to pump) dented or clogged.	 • Add oil. • Repair. • Adjust valve set pressure and check specified oil pressure. • Adjust valve set pressure and check specified oil pressure. • Reinstall correctly. • Repair or replace.
10. Insufficient or variable oil flow.	Oil pump △ Lack of oil. • High oil viscosity. △ Pump lacking in capacity or deteriorated in characteristic. • Reversed direction of rotation. • Flow control valve orifice clogged. Valve • Faulty. (Valve left closed, no oil being fed to power steering cylinder.) • Faulty. (Unbalanced oil pressure)	 • Add oil. • Change to specified viscosity of oil. • Replace or repair. • Adjust cam ring or replace oil pump. • Clean. • Adjust valve set pressure and check specified oil pressure. • Adjust valve set pressure and check specified oil pressure.

PREVIEW - YOUFIXTHIS.COM

Download full manual at youfixthis.com

PREVIEW ONLY

You're viewing 12 of 240 pages

The full manual includes:

- All 240 pages, complete
- Searchable PDF (find any keyword)
- No watermarks
- Instant download
- Print-ready quality

GET FULL MANUAL NOW

Komatsu FG20-8, FG25-8, FG30-8, FD20-8, FD25-8, FD30-8, FD20-10, FD25-10, FD30-10, FG20S-4, FG25S-4, FG30S-4, FD20S-4, FD25S-4, FD30S-4, FG20S-5, FG25S-5, FG30S-5, FG20H-8, FG25H-8, FG30H-8, FD20H-8, FD25H-8, FD30H-8, FG20/25/30-8, FD20/25/30-8, FD20/25/30-10, FG20S/25S/30S-4, FD20S/25S/30S-4, FD20S/25S/30S-5, FG20H/25H/30H-8, FD20H/25H/30H-8 Shop Manual

Scan or click anywhere
youfixthis.com

Click anywhere on this page to get the full manual