System	Work	Contents	Man-hours	
			Type E	Type EE
Maintenance	Replacement	Drive unit gear oil	0.8	
		Hydraulic oil and oil filter	1.0	
		Hydraulic oil	0.7	
	Maintenance	Grease application	0.3	
Frame	Replacement or removal and installation	Floor comp.	0.1	
		Body cushion	0.1	
		Panels (1) - (4)	0.2	
		Arm pad		
		Panel bracket	0.1	
		Panel support		
		Side cover comp. (1)	0.1	
		Steering post	0.1	
		Side cover (2) (3)	0.1	
		Front cover	0.1	
		Steering bracket	0.1	
		Battery cover (L) (R)	0.1	
		Battery cover EE (L) (R)	0.1	
		Battery roller (1 roller)	0.1	
		Battery seat	0.1	
Potentiometer	Replacement or removal and installation	Steering angle detection potentiometer	0.3	
Drive comp.	Replacement or removal and installation	Drive comp. (with traction motor)	1.5	
		Traction motor	0.5	
	Maintenance	Drive gear case oil leakage, noise, oil level, fouling	0.3	
		Loosening of installation bolt	0.1	
Wheel shaft	Replacement or removal and installation	Drive wheel shaft	1.0	
		Oil seal	0.2	
Drive support	Replacement or removal and installation	Drive support (EPS)	1.0	
Steering gear	Replacement or removal and installation	Steering gear	1.5	
		Oil seal bearing	0.5	
Coupling	Replacement or removal and installation	Coupling	0.5	
Drive unit	Replacement or removal and installation	Hub bolt/nut	0.4	
	Maintenance	Hub bolt/nut damage, loosening	0.1	
Caster wheel	Replacement or removal and installation	Caster wheel (1 wheel)	0.3	
		Bearing	0.3	
	Maintenance	Cracking, damage, wear, embedding of metal fragments or other items	0.1	
Caster assy	Replacement or removal and installation	Caster comp.	0.4	
		Link pin	0.5	
		Bushing	0.2	
		Spring	0.4	
		Bearing (caster arm)	0.4	
		Caster arm	0.4	
	Maintenance	Cracking, damage, deformation, loosening of installation bolt	0.1	

PREVIEW - YOUFIXTHIS.COM

Download full manual at youfixthis.com

2-2. Disassembly and assembly

CAUTION

- Before disconnecting a high-pressure pipe or high-pressure hose, be sure to operate the lever to lower the fork and release the pressure from inside the pipe/hose. Depress the presence pedal and turn the key switch to the ON position, then operate the lever to lower the fork. Do not perform any lever operations other than lowering of the fork. Because pressure is applied when the hydraulic motor operates

PREVIEW - YOUFIXTHIS.COM

Blurred on purpose. The manual you buy has this page in full quality.

Download full manual at youfixthis.com

5. Bolt tightening torques

Tightening torques that are not otherwise listed in the manual shall be as shown in the table below.

Bolt class	4T	8T	Brass	Stainless steel
	4.6			A2-70

PREVIEW - YOUFIXTHIS.COM

Blurred on purpose. The manual you buy has this page in full quality.

Download full manual at youfixthis.com

7. HYDRAULIC SYSTEM

7-1. Hydraulic circuit diagram

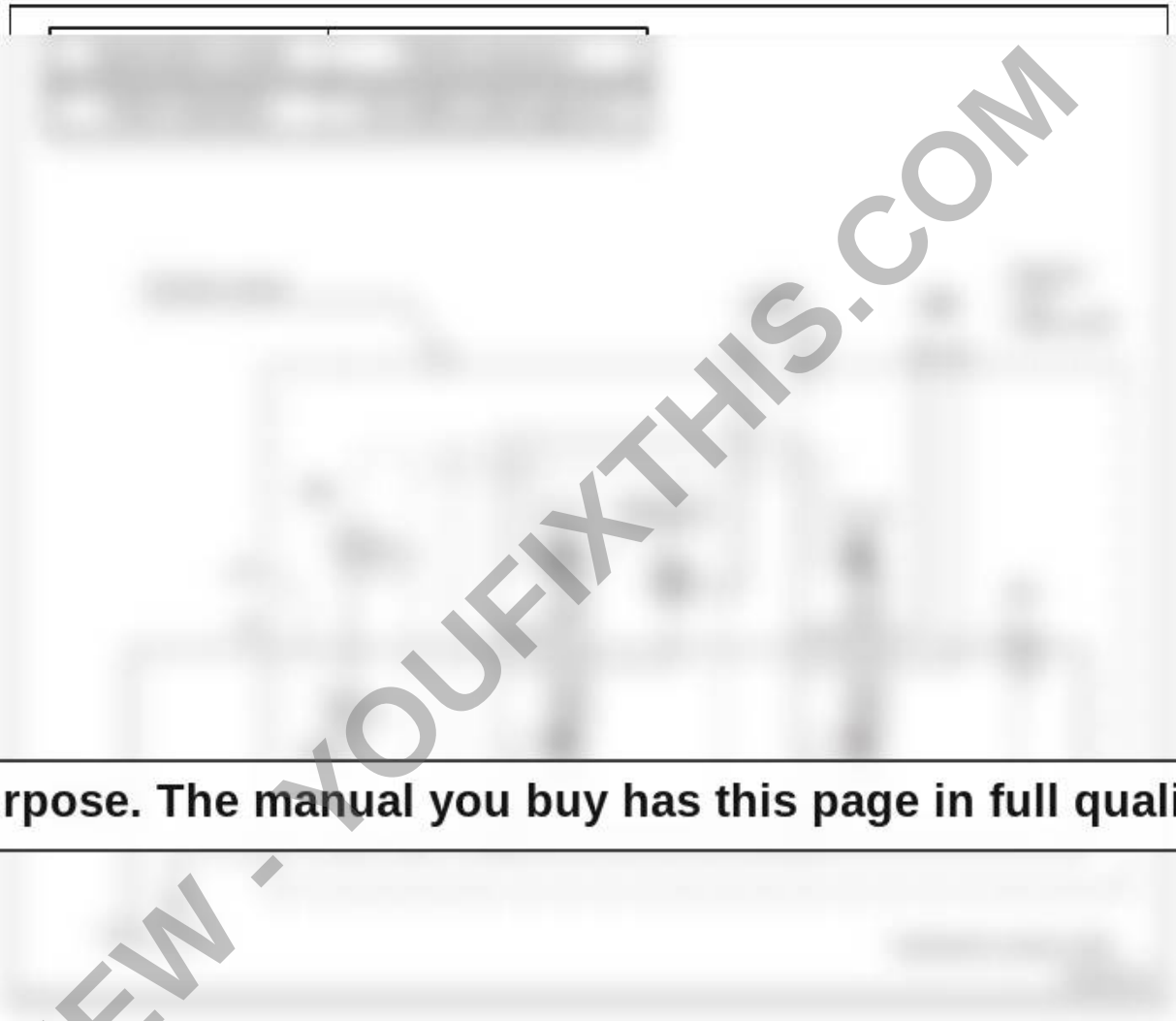

Blurred on purpose. The manual you buy has this page in full quality.

PREVIEW - YOUFIXTHIS.COM

Download full manual at youfixthis.com

2-4. Troubleshooting

2-4-1. Drive unit troubleshooting

No.	Symptom	Cause	Corrective action
1	Continuous noise while traveling	(1) Poor engagement of spiral bevel gear and spiral bevel pinion, or tooth wear	Adjust or replace
		(2) Poor engagement of counter gear and drive pinion, or tooth wear	Replace
		(3) Poor engagement of counter gear and driven gear, or tooth wear	Replace
		(4) Incorrect adjustment or wear of spiral bevel gear bearing	Adjust or replace
		(5) Incorrect adjustment or wear of spiral bevel pinion bearing	Adjust or replace
		(6) Insufficient oil in gear case or intrusion of foreign substance	Clean and add oil
2	Heating of gear case	(1) Damage to bearings caused by high pre-load	Replace
		(2) Backlash of spiral bevel gear and spiral bevel pinion too small	Adjust
3	Vibration while traveling	(1) Flat spot on wheel	Replace
		(2) Chipped wheel	Replace
		(3) Large gap between drive support and link	Adjust
4	Abnormal noise while traveling	(1) Separation of wheel	Replace
		(2) Abnormal noise from drive motor	Inspect
5	Gear oil leakage	(1) Oil seal wear	Replace
		(2) Loosening of gear case support installation bolts or damage to O-ring	Replace
		(3) Loosening of gear case cover installation bolts or damage to packing	Replace
6	Slipping while accelerating	(1) Incorrect adjustment of control linkage	Adjust
		(2) Abnormal wheel wear	Replace

PREVIEW - YOUFIXTHIS.COM

Download full manual at youfixthis.com

SAFE WORK

1. Precautions for safe inspection and maintenance work

Maintenance workshop (location)

CAUTION

The location must be sufficiently large and flat.

- The floor space of the maintenance workshop (location) where inspections and maintenance are performed must be sufficiently large, and the floor surface must be flat and free of holes and other non-standard conditions.

➡ **Failure to observe this requirement may result in the forklift truck falling over or other unexpected accidents.**

CAUTION

The location must have sufficient ventilation.

- Work such as welding of coated components or sandpaper polishing of coatings must be performed in a location that is sufficiently well ventilated.

➡ **Failure to observe this requirement may result in inhalation of toxic gases or dusts that are extremely hazardous to human health.**

CAUTION

The location must be equipped with fire extinguishing equipment.

- Equipment such as first aid kits and fire extinguishers must be kept close at hand when working, for use in case of fire.

CAUTION

The location must have sufficient brightness and safety.

- The work location must have sufficient brightness and safety. Portable safety lamps must be used for work inside or underneath the trucks. Use safety lamps that have a wire cage covering the light bulb.

CAUTION

The location must be properly clean and organized.

- The work area must at all times be kept clean and well organized.
- In particular, disassembled parts must be kept clean and well organized.

PREVIEW - YOUFIXTHIS.COM

Download full manual at youfixthis.com

2-3. Inspection and adjustment

2-3-1. Inspecting and replacing gears

Inspection item	Corrective action
Tooth contact	If damage is severe, replace the set.
Wear	
Scoring	
Pitting	
Damage to splines	

● Inspection of gears

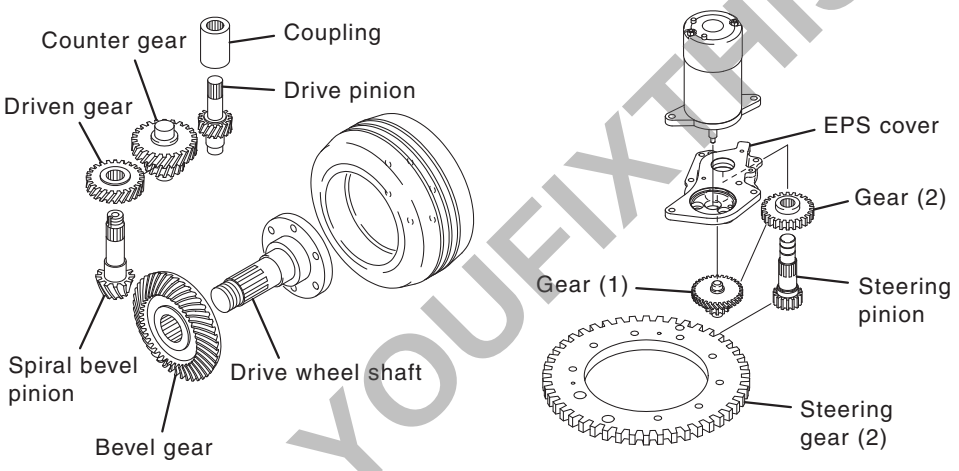

2-3-2. Adjusting the potentiometer

➡ **See “Adjusting the EPS sensor” on page 105.**

PREVIEW - YOUFIXTHIS.COM

Download full manual at youfixthis.com

7b. OIL TANK

7b-1. Disassembly and assembly

CAUTION

- Be sure to place wheel chocks at the tires.
- When draining the oil, place the fork in contact with the ground before removing the plug.
- Before disconnecting a high-pressure pipe or high-pressure hose, be sure to operate the lever to lower the fork and release the pressure from inside the pipe/hose. Depress the presence pedal and turn the key switch to the ON position, then operate the lever to lower the fork. Do not perform any lever operations other than lowering of the fork. Because pressure is applied when the hydraulic motor operates.
- When disconnecting hydraulic pipes, cap them so that dust and dirt do not enter them.
- When installing the filter and plug, wind the threads with seal tape and tighten securely.
- Turn the key switch to the OFF position and be sure to disconnect the battery plug.

7b-1-1. Removing and installing the oil tank

➡ **See steps 1 - 7 in "Removing the drive unit" on page 22.**

* When installing the oil tank, follow the procedure for removal in the opposite order.

PREVIEW - YOUFIXTHIS.COM

Download full manual at youfixthis.com

3. Remove the MPU board together with the FET board comp.

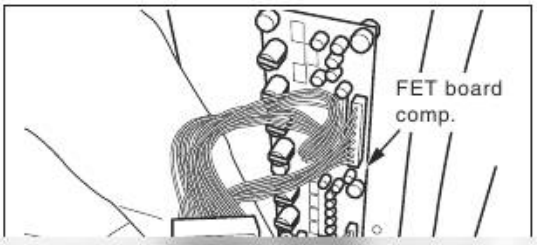

CAUTION

- Be sure to make a note of the locations where the lead wires were connected.
- Be careful not to connect the FET board comp. connector in an incorrect position.

PREVIEW - YOUFIXTHIS.COM

Blurred on purpose. The manual you buy has this page in full quality.

Download full manual at youfixthis.com

6.2 Upright Disassembly

Rail Cylinders

1. Pull the inner and intermediate rail assemblies part way out of the outer rail assembly to provide access for secondary cylinder removal. The rail cylinders must be removed to adjust or replace the lower rail rollers. Refer to figure 6-6.

2. Loosen and remove the hydraulic fittings at the base of the left and right secondary cylinders. Discard old O-Rings. Install new O-Ring(s) at time of installation. See figure 6-5.

3. Remove the snap ring at the base of each cylinder.

Rollers and Shims

Pulling the rail assemblies part way out of the bottom of the outer rail assembly will allow access to remove and/or replace rollers and shims. The rail cylinders must be removed to accomplish this.

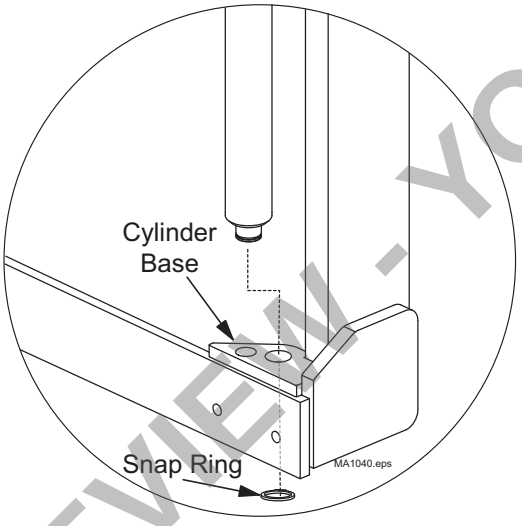

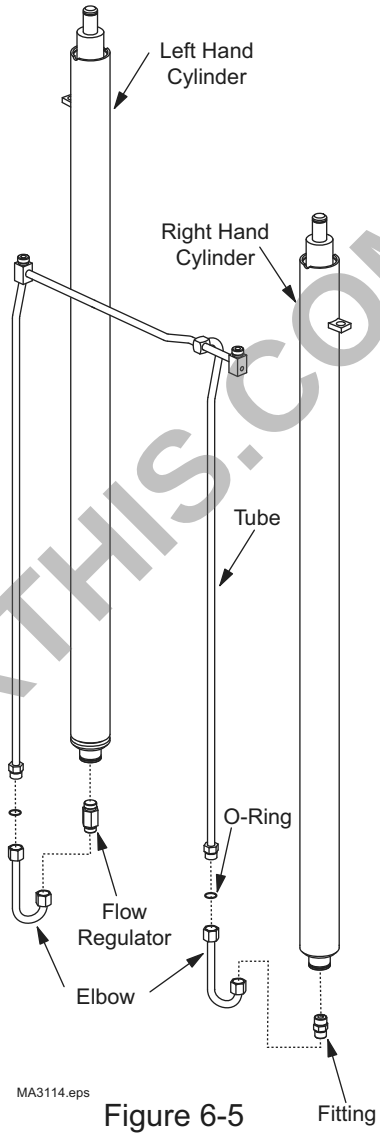

Figure 6-5

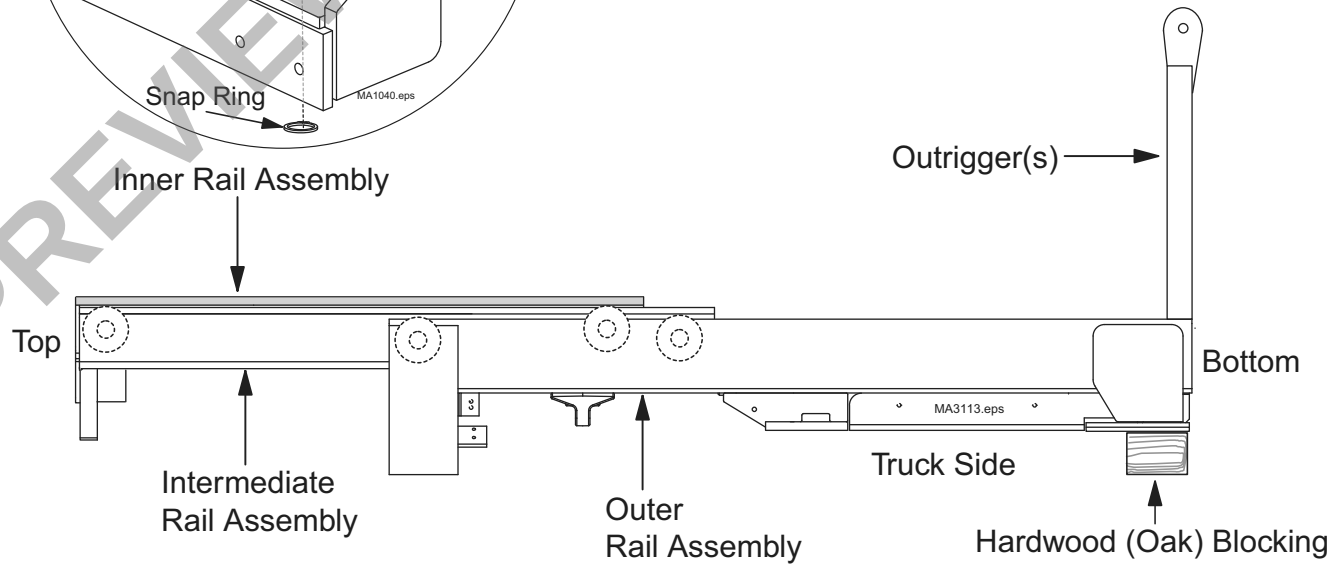

Figure 6-6

PREVIEW - YOUFIXTHIS.COM

Download full manual at youfixthis.com

9.5 Determining the Number of Shims needed to make roller adjustments

***Refer to step 3. Look at the three numbers that were recorded at each roller on the rails. The smallest of these is the total number of shims that need to be added. "0" means DO NOT add shims.**

***If any of the rollers require adjustment, refer to adjustment procedures on next page.**

***If the upright roller clearance was checked with the upright mounted to the truck, and roller adjustment is required, remove the upright from the truck as described at the beginning of this section.**

***Do not attempt to adjust roller with the upright mounted to the truck.**

# of Shims	Dimension per Shim (in)	Dimension (decimal - in)
one	1/32"	0.031
two		0.062
three		0.093

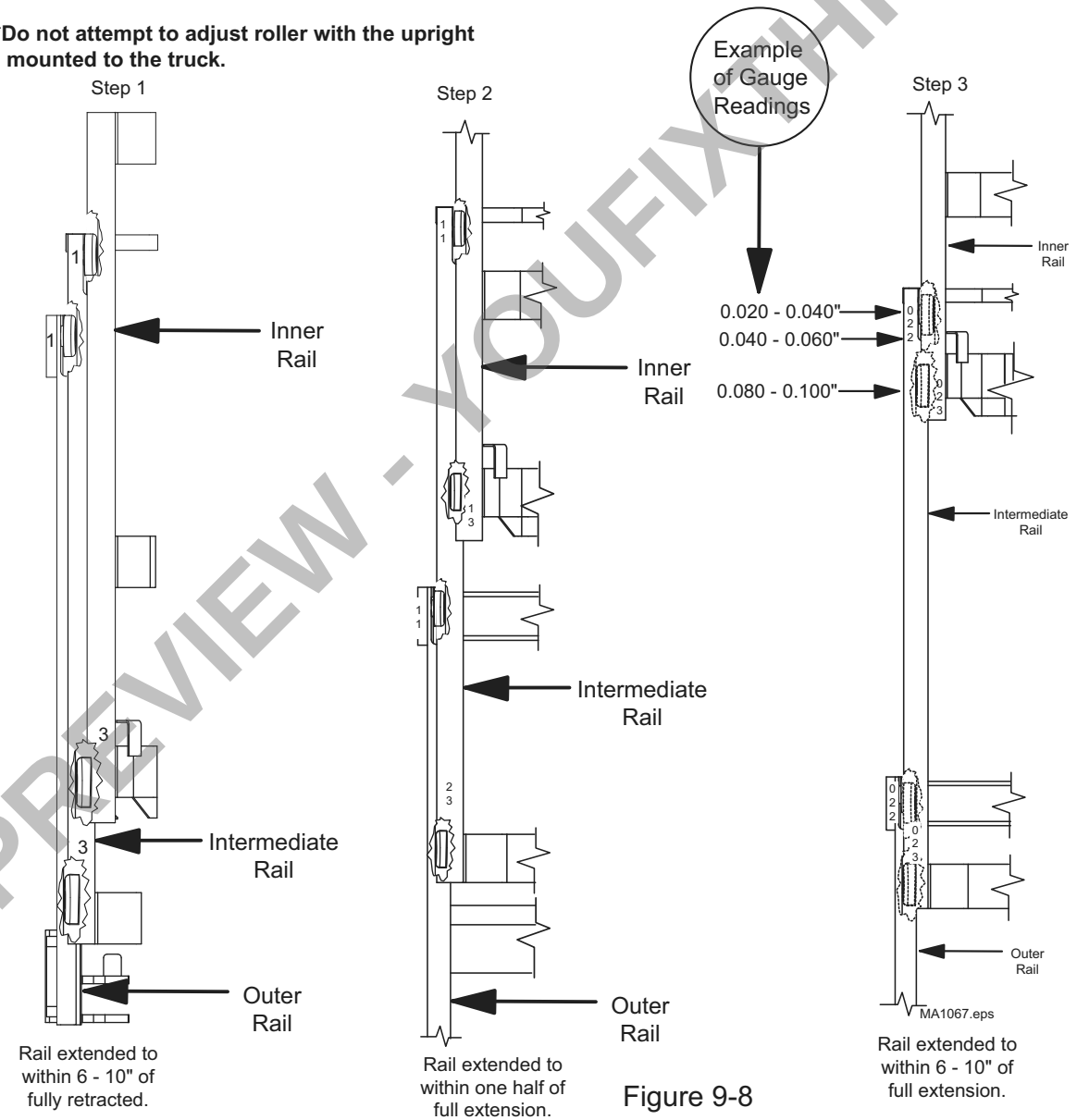

Figure 9-8

PREVIEW - YOUFIXTHIS.COM

Download full manual at youfixthis.com

11.8 Integral Sideshifter Service

PREVIEW - YOUFIXTHIS.COM

Blurred on purpose. The manual you buy has this page in full quality.

Download full manual at youfixthis.com

PREVIEW ONLY

You're viewing 12 of 209 pages

The full manual includes:

- All 209 pages, complete
- Searchable PDF (find any keyword)
- No watermarks
- Instant download
- Print-ready quality

GET FULL MANUAL NOW

Komatsu FR15K-3, FR18K-3, FR23K-3 Service Manual

Scan or click anywhere
youfixthis.com

Click anywhere on this page to get the full manual