## 10.1 GENERAL VIEW OF MACHINE

If directions are indicated in this section, they refer to the directions shown by the arrows in the diagram below.

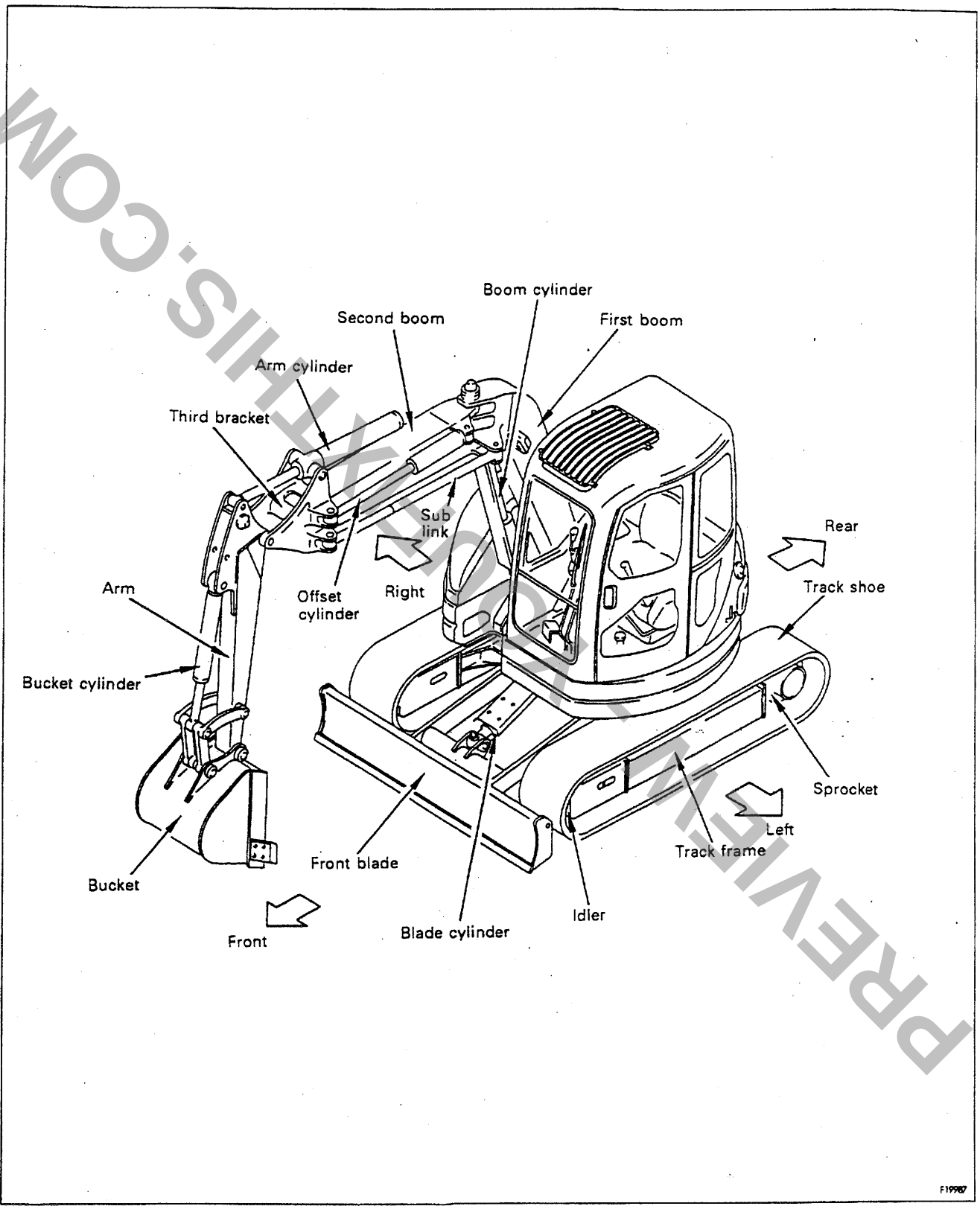


PREVIEW ONLY THIS.COM

Download full manual at youfixthis.com

# 23. MAINTENANCE SCHEDULE CHART

## 23.1 MAINTENANCE SCHEDULE CHART

| SERVICE ITEM | PAGE |
|---|---|
| **INITIAL 250 HOURS SERVICE (only after the first 250 hours)** | |
| Engine valve clearance, check and adjust | 3-21 |
| **WHEN REQUIRED** | |
| Check, clean and replace air cleaner element | 3-22 |
| Clean inside of cooling system | 3-25 |
| Drain water, sediment from fuel tank | 3-29 |
| Check level of battery electrolyte | 3-30 |
| Clean water separator element | 3-31 |
| Check electric wirings | 3-32 |
| Check rubber shoes (Machine equipped with rubber shoes) | 3-33 |
| Check and adjust track tension (Machine equipped with rubber shoes) | 3-35 |
| Replace rubber shoes (Machine equipped with rubber shoes) | 3-38 |
| Check and adjust track tension (Machine equipped with steel shoes) | 3-41 |
| Replace bucket teeth | 3-44 |
| Adjust bucket clearance | 3-45 |
| **CHECK BEFORE STARTING** | |
| Check and refill coolant | 3-46 |
| Check oil level in engine oil pan, add oil | 3-46 |
| Check fuel level | 3-47 |
| Check oil level in hydraulic tank, add oil | 3-48 |
| Check dust indicator | 3-49 |
| Check water separator | 3-49 |
| **EVERY 100 HOURS SERVICE** | |
| Lubricating | 3-50 |
| • Swing circle (1 point) | 3-50 |
| • Swing pinion (1 point) | 3-50 |
| • Blade cylinder foot pin (1 point) | 3-50 |
| • Blade cylinder rod end (1 point) | 3-50 |

PREVIEW - YOUFIXTHIS.COM

Download full manual at youfixthis.com

# 25. SPECIFICATIONS

**PC50UU-2**

| | Rubber shoe, cab | Steel shoe, cab |
|---|---|---|
| **WEIGHT** | | |

Blurred on purpose. The manual you buy has this page in full quality.

PREVIEW - YOUFIXTHIS.COM

Download full manual at youfixthis.com

# 30. INTRODUCTION OF ATTACHMENTS

## 30.1 SPECIFICATION, USE

| Name | Specification |
|---|---|

Blurred on purpose. The manual you buy has this page in full quality.

PREVIEW - YOUFIXTHIS.COM

Download full manual at youfixthis.com

# 31. MACHINES ABLE TO INSTALL ATTACHMENTS

## 31.1 EXPLANATION OF EQUIPMENT



Blurred on purpose. The manual you buy has this page in full quality.

PREVIEW - YOUFIXTHIS.COM

Download full manual at youfixthis.com

# 2. SAFETY INFORMATION

Most accidents are caused by the failure to follow fundamental safety rules for the operation and maintenance of machines. To avoid accidents, read, understand and follow all precautions and warnings in this manual and on the machine before performing operation and maintenance.

To identify safety messages in this manual and on machine labels, the following signal words are used.

**DANGER** – **This word is used on safety messages and safety labels where there is a high probability of serious injury or death if the hazard is not avoided. These safety messages or labels usually describe precautions that must be taken to avoid the hazard. Failure to avoid this hazard may also result in serious damage to the machine.**

**WARNING** – **This word is used on safety messages and safety labels where there is a potentially dangerous situation which could result in serious injury or death if the hazard is not avoided. These safety messages or labels usually describe precautions that must be taken to avoid the hazard. Failure to avoid this hazard may also result in serious damage to the machine.**

**CAUTION** – **This word is used on safety messages and safety labels for hazards which could result in minor or moderate injury if the hazard is not avoided. This word might also be word for hazards where the only result could be damage to the machine.**

**NOTICE** – **This word is used for precautions that must be taken to avoid actions which could shorten the life of the machine.**

Safety precautions are described in SAFETY from page 1-1.

Komatsu cannot predict every circumstance that might involve a potential hazard in operation and maintenance. Therefore the safety messages in this manual and on the machine may not include all possible safety precautions. If any procedures or actions not specifically recommended or allowed in this manual are used, you must be sure that you and others can do such procedures and actions safely and without damaging the machine. If you are unsure about the safety of some procedures, contact Komatsu distributor.

PREVIEW - YOUFIXTHIS.COM

Download full manual at youfixthis.com

# 3. INTRODUCTION

## 3.1 INTENDED USE

This Komatsu HYDRAULIC EXCAVATOR is designed to be used mainly for the following work:

- Back hoe work
- Smoothing work
- Ditching work
- Side ditching work
- Loading work

See the section "12.11 WORK POSSIBLE USING HYDRAULIC EXCAVATOR" for further details.

## 3.2 FEATURES

In addition to the functions generally found on small hydraulic excavators with boom offset, this machine also has the following mechatronics equipment.

- Interference prevention device
  If the bucket comes close to the cab, this device functions to stop the work equipment and to sound an alarm. Please read the instructions on the method of operation and the precautions in the safety section, and be sure to use this device correctly.

- Auto-stop device for work equipment
  This device automatically controls the display of the digging depth, the setting for the amount that the boom can be raised or lowered, and the positioning of the left offset. For details of the method of the operation, see "12.19 HANDLING 4-SYSTEM".

## 3.3 BREAKING IN THE MACHINE

Your Komatsu machine has been thoroughly adjusted and tested before shipment.
However, operating the machine under severe conditions at the beginning can adversely affect the performance and shorten the machine life.

Be sure to break in the machine for the initial 100 hours (as indicated by the service meter.)
During breaking in:

- Idle the engine for 5 minutes after starting it up.
- Avoid operation with heavy loads or at high speeds.
- Avoid sudden starts, sudden acceleration, sudden steering and sudden stops except in cases of emergency.

The precautions given in this manual for operating, maintenance, and safety procedures are only those that apply when this product is used for the specified purpose. If the machine is used for a purpose that is not listed in this manual, Komatsu cannot bear any responsibility for safety. All consideration of safety in such operations is the responsibility of the user.

Operations that are prohibited in this manual must never be carried out under any circumstances.

PREVIEW - YOUFIXTHIS.COM
Download full manual at youfixthis.com

## 12.4.2 MOVING THE MACHINE BACKWARD

**⚠ WARNING**

- **Before operating the travel levers, check the direction of the track frame. If the sprocket is at the front, the operation of the travel levers is reversed.**
- **When moving off, check that the area around the machine is safe, and sound the horn before moving.**
- **Clear all personnel from the machine and the area.**
- **Clear all obstacles from the path of the machine.**
- **Use extreme care when reversing the machine. Note there is an blind spot behind the machine.**

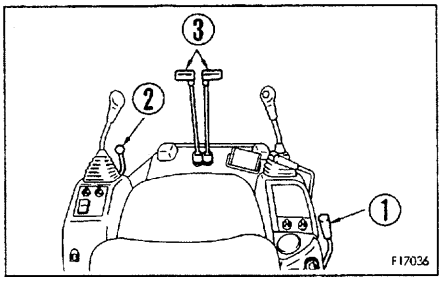


1. Pull fuel control lever ① towards the high idling position to increase the engine speed.

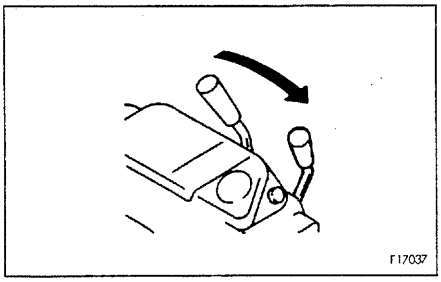


2. Set lock lever ② in the FREE position, fold the work equipment, and raise it 40 – 50 cm (16 – 20 in) from the ground.
3. Raise the blade.

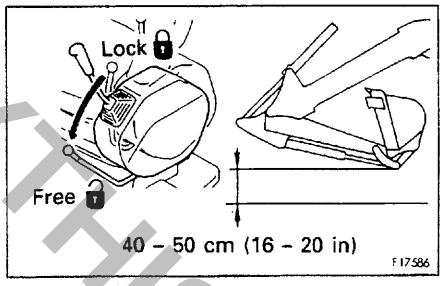


4. Operate right and left travel levers ③ as follows.

- When the sprocket is at the rear of the machine.
  Push levers ③ forward slowly to move the machine off.

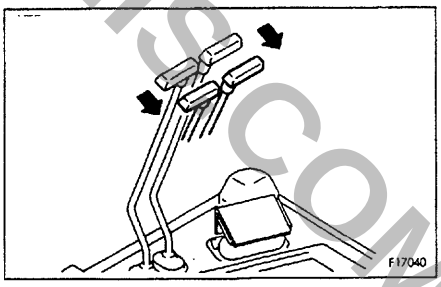


- When the sprocket is at the front of the machine
  Pull levers ③ backward slowly to move the machine off.

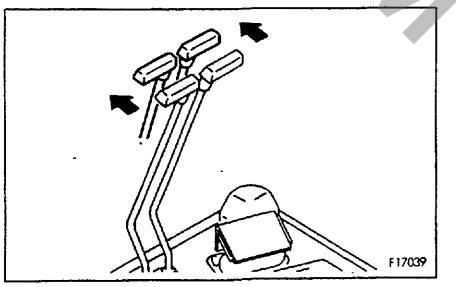


PREVIEW - YOUFIXTHIS.COM
Download full manual at youfixthis.com

## 13.3 PRECAUTIONS FOR LOADING

After loading to the specified position, secure the machine as follows.

1. After loading the machine, fully extend the bucket and arm cylinders, then slowly lower the boom.
2. Lower the blade.
3. Stop the engine and remove the starting switch key.

**NOTICE**

**When transporting the machine, place rectangular timber under one end of the bucket cylinder to prevent it touching the ground, thereby saving it from possible damage.**

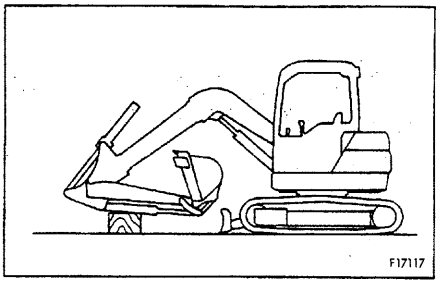


4. Lock all the control levers securely with the lock lever.

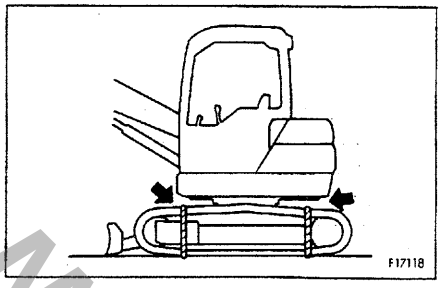


5. When transporting the machine, place rectangular timber underneath the front and rear track shoes to prevent the machine from moving about. Also, hold it down with chains or rope. Be particularly careful to ensure that the machine does not slip sideways.

PREVIEW - YOUFIXTHIS.COM

Download full manual at youfixthis.com

**CRITICAL PARTS**

| No. | Critical parts for periodical replacement | Q'ty | Replacement interval |
|---|---|---|---|
| 1 | Fuel hose (fuel tank – water separator) | 1 | Every 2 years or 4000 hours, whichever comes sooner |
| 2 | Fuel hose (water separator – feed pump) | 1 | |
| 3 | Fuel hose (feed pump – fuel filter) | 1 | |
| 4 | Fuel hose (fuel filter – injection pump) | 2 | |
| 5 | Fuel hose (fuel filter – fuel cooler) | 1 | |
| 6 | Fuel hose (fuel cooler – fuel tank) | 1 | |
| 7 | Fuel hose (fuel tank – filler port) | 2 | |
| 8 | Spill hose (between nozzles) | 3 | |
| 9 | Spill hose (nozzle – injection pump) | 1 | |
| 10 | Spill cap | 1 | |

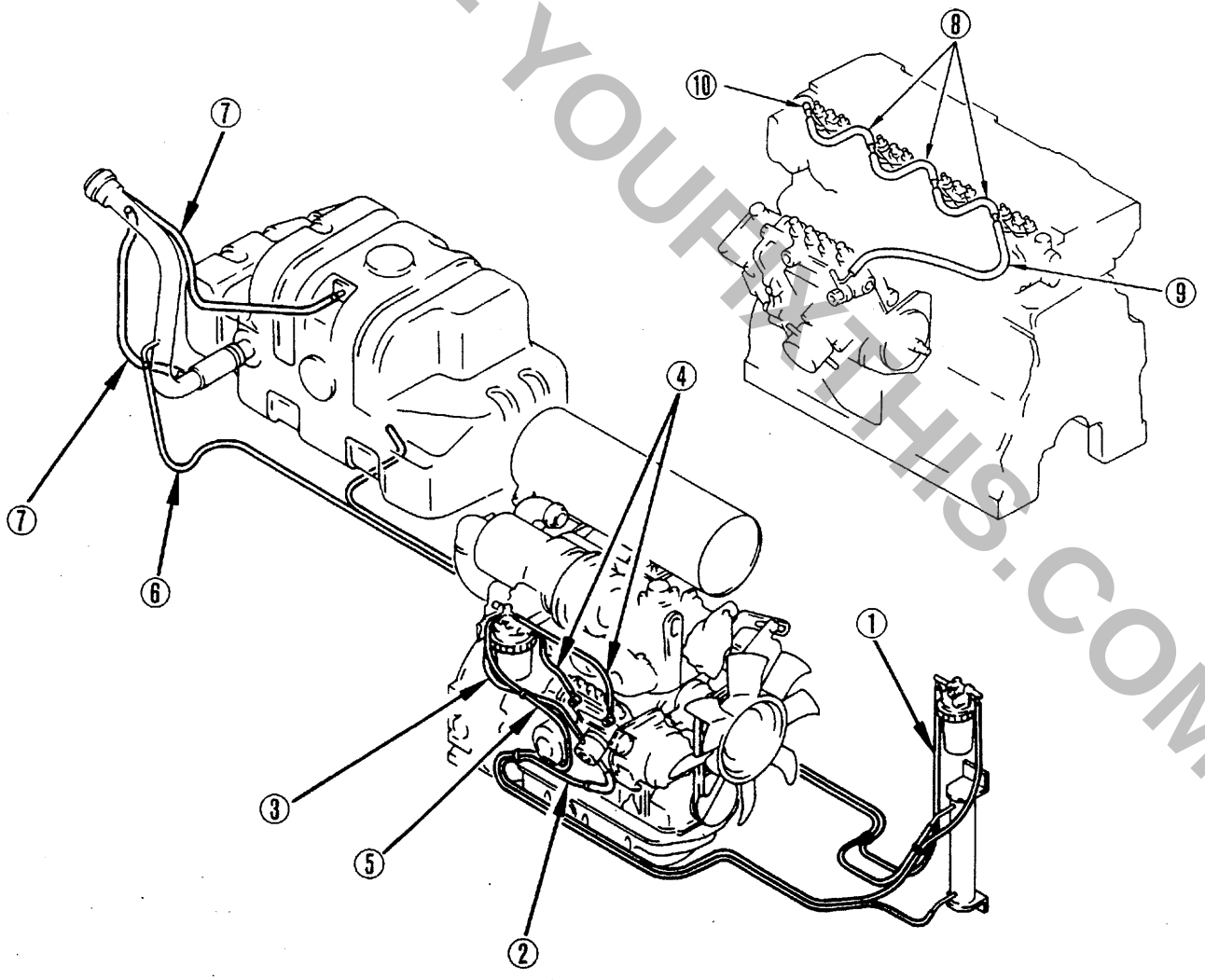


PREVIEW - YOUFIXTHIS.COM
Download full manual at youfixthis.com

## 24.5.2 CHECK OIL LEVEL IN FINAL DRIVE CASE, ADD OIL

**⚠ WARNING**

- **The oil is at high temperature immediately after the machine has been operated. Wait for the oil to cool down before starting the operation.**
- **If there is still pressure remaining inside the case, the oil or plug may fly out.**
  **Loosen the plug slowly to release the pressure.**

Prepare the following.
- Container to catch drained oil
- Hexagon wrench

1. Set plug Ⓖ at the top, with plug Ⓖ and plug Ⓟ perpendicular to the ground surface.
2. Set a container under plug Ⓟ to catch the oil.
3. Using the hexagon wrench, remove plug Ⓖ, and check that the oil level is near the bottom of the plug hole.
4. If the oil level is low, use the hexagon wrench to remove plug Ⓕ, then add oil through the hole of plug Ⓕ.
   Add engine oil until the oil flows out from plug hole Ⓖ.

   For details of the oil to use, see "20. USE OF FUEL, COOLANT AND LUBRICANTS ACCORDING TO AMBIENT TEMPERATURE".
5. After checking, install plug Ⓕ and plug Ⓖ.

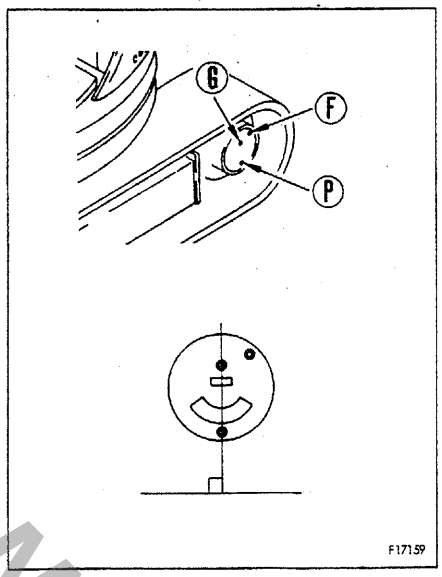


PREVIEW - YOUFIXTHIS.COM
Download full manual at youfixthis.com

# PREVIEW ONLY

You're viewing 11 of 228 pages

## The full manual includes:

- All 228 pages, complete
- Searchable PDF (find any keyword)
- No watermarks
- Instant download
- Print-ready quality

GET FULL MANUAL NOW

**Komatsu PC50UU-2 Operator Manual**

**Scan or click anywhere**
**youfixthis.com**

*Click anywhere on this page to get the full manual*