11. INSTRUMENTATION AND CONTROLS

11.1 INSTRUMENTS, WARNING LIGHTS AND PUSH-BUTTONS

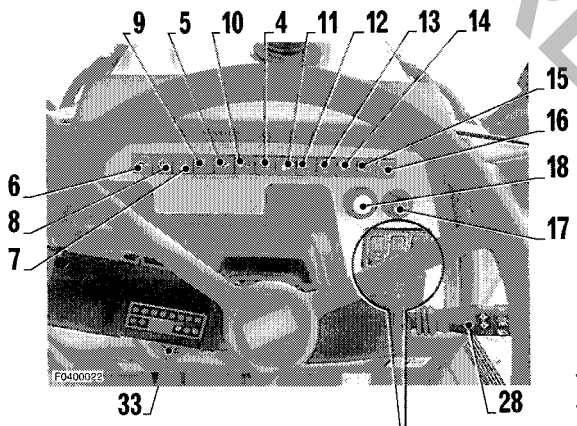

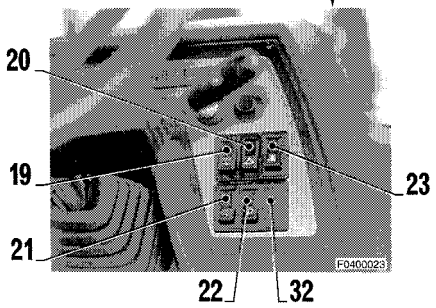

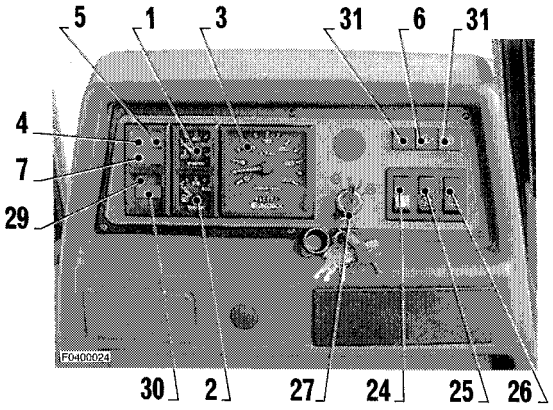

1. Engine coolant thermometer
2. Fuel level indicator
3. Rev. counter - hour counter
4. Generator warning light
5. Low engine oil pressure warning light
6. Low converter oil pressure warning light
7. Clogged air filter warning light
8. Maximum converter oil temperature warning light
9. Engine coolant water temperature warning light
10. Direction indicator light
11. Fuel reserve warning light
12. Hand-brake and brake fluid level warning light
13. Front traction indicator (for machines with 4-wheel drive only)
14. Parking lights warning light
15. Headlight indicator
16. Blocked differential warning light
17. Incorrect gear change warning light
18. 4-wheel drive engagement button (only with 1st and 2nd gear)
19. Test button for warning lights
20. Emergency lights switch
21. Front working floodlight switch
22. Front windscreen-wiper switch
23. Ventilator switch
24. Rotating beam switch
25. Rear working floodlight switch
26. Rear windscreen-wiper switch
27. Ignition switch
28. Direction indicator, headlight beam dipper, horn, and flashing emergency lights
29. Acoustic Alarm
30. Multifunction warning light
31. Spare warning lights
32. Spare push-buttons
33. Overspeed warning alarm

11.1.1 INSTRUMENTS

1. Engine coolant thermometer
This shows the temperature of the engine coolant fluid which should normally be between 80 ÷ 85°C

2. Fuel level indicator
Shows the level of fuel in the tank. Indication only given with ignition key in position « I » (See position 27).

3. Rev. counter - hour counter
A combined instrument indicating engine revs with a needle, and operating hours shown in the lower windows.
The reading can be used as a guide to the intervals between maintenance operations.

n/min

11.1.2 WARNING LIGHTS

4. Generator warning light
This light comes on when voltage reaches the starting motor, and goes out once the engine reaches idling speed. If this light stays on once the engine is running normally, it means that the alternator is not working efficiently and that the batteries are not charging correctly.

IMPORTANT

- **If the warning light stays off when the ignition key is turned to pos. « I », it means that the alternator is defective or broken. In this case the engine will not fire even if the gear lever is in neutral.**

5. Low engine oil pressure warning light
This warning light comes on before the engine is started and activates an acoustic alarm when the starter circuit is switched on, but goes out as soon as the engine lubrication system is normal. If this warning light stays on or comes on while the engine is running, stop the engine immediately and look for the fault.

6. Low converter oil pressure warning light
This light comes on before the engine is started, as soon as the key is inserted into the ignition circuit, and goes out as soon as driving pressure reaches the minimum necessary to transmit movement. If it stays on when the machine is moving, stop at once and look for the reason for this signal.

Download full manual at youfixthis.com
PREVIEW - YOUFIXTHIS.COM

27. MAINTENANCE PROGRAM

27.1 MAINTENANCE EVERY 8 HOURS

No.	ITEM	INTERVENTION	PAGE
a	Various controls	—	128
b	Coolant liquid level	Check and refill	128
c	Fuel tank	Check and refill	129
d	Engine crankcase oil	Check and refill	129
e	Hydraulic circuit oil tank	Check and refill	130
f	Articulated joints	Lubricate (46 points)	130
g	Front and back tires	Control tire pressure	132

27.2 MAINTENANCE ON COMPLETION OF THE FIRST 50 HOURS

No.	ITEM	INTERVENTION	PAGE
a	Engine oil	Change	144
b	Engine oil-filter	Change	143
c	Hydraulic oil drainage filter	Change	142
d	Hydraulic transmission filter	Change	147

27.3 MAINTENANCE EVERY 50 HOURS

No.	ITEM	INTERVENTION	PAGE
a	Engine air filter ejector	Clean ejector	133
b	Battery	Control electrolyte level	133
c	Braking system	Check oil level	134
d	Front axle	Check oil levels (3 points)	135
e	Rear axle	Check oil levels (3 points)	135
f	Hydraulic transmission	Check oil level	136
g	Front and rear wheel	Check tightness nuts	136

PREVIEW - YOUFIXTHIS.COM

Download full manual at youfixthis.com

LIFTING CAPACITY FKI WB97R-1
(BOOM WITH TRANSPORTABLE DEVICE)



TECHNICAL DATA WB95R-1

MASS

Total minimum mass	kg	7450
Total maximum mass	kg	8850

PREVIEW - YOUFIXTHIS.COM

Blurred on purpose. The manual you buy has this page in full quality.

Download full manual at youfixthis.com

- **This cleaning operation must be carried out every time the radiator and the heat exchanger become accidentally soiled with oil, diesel fuel or oily or greasy substances.**

27.7.c DRAINING THE FUEL FILTER

DANGER

- **The fuel is inflammable. Do not approach it with a naked flame, and do not smoke while draining the filter.**
- **If fuel is spilled, clean the soiled area immediately.**

The purpose of this operation is to drain away condensate. It is carried out with the tank full in order to prevent air penetrating into the fuel supply circuit.
The drainage is performed at the end of the day's work, before the engine has cooled completely, to avoid freezing if the temperature drops. When the plug (1) is loosened, the condensate drains away until clear diesel fuel runs out.

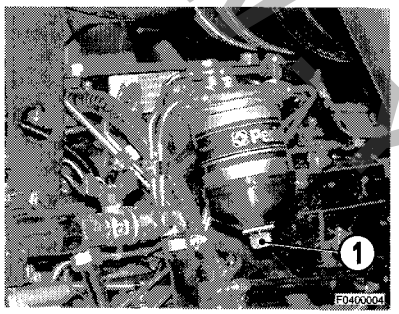

27.7.d CHANGING THE HYDRAULIC CIRCUIT OIL FILTER

DANGER

- **When the machine stops work the hydraulic oil is very hot. Leave it to cool down to 40-45°C before changing the oil.**
- **The hydraulic circuit is a pressurised system. Unscrew the breather plug slowly to release residual pressure.**

The filter is mounted in the drainage section of the circuit, and it is this filter that catches the small metallic particles that detach themselves from the various parts of the system due to wear. The filter can be reached after the back flange of the tank has been removed, and the procedure for the exchange is as follows:

1 - Remove the breather plug (1).

2 - Remove the retaining screws (2) of the filter cover (3) and take out the entire cartridge group (4).

3 - Loosen the retaining nut (5) of the filtering element and change the cartridge (6).

4 - Follow the inverse order to re-assemble the group and check that the sealing washer (7) of the cover (3) is still in perfect condition and firmly positioned in its seating in the cover. (Use spanner of size 13 and 17 mm)

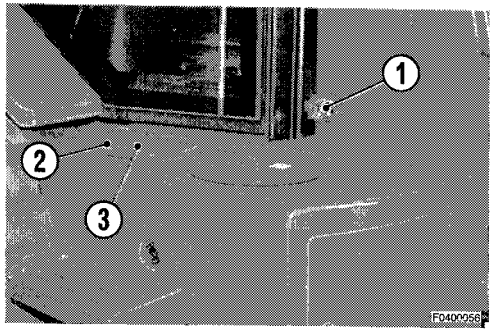

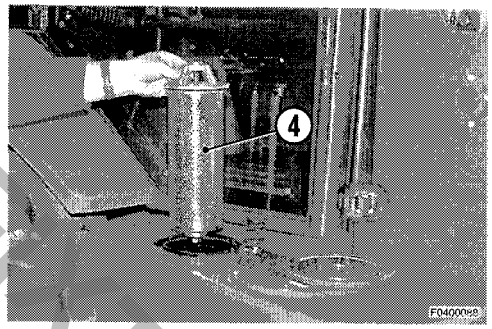

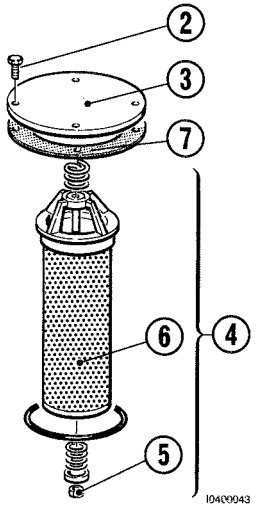

27.7.e CHANGING THE ENGINE OIL FILTER

DANGER

- **When the machine stops work the engine oil is very hot. Leave it to cool down to 40-45°C before changing the oil.**
- **Any oil spilled during the change could lead to falls, so wear anti-slip shoes and remove all traces of oil from the floor.**

This operation should be performed every time the engine oil is changed.
The procedure is as follows:

1 - Using the special wrench provided, unscrew the used filter (1) and dispose of it.

2 - Clean the surface on which the leaktight seal rests on the filter support (2).

PREVIEW YOUFIXTHIS.COM
Download full manual at youfixthis.com

29. AUTHORIZED OPTIONAL EQUIPMENT

29.1 MACHINE WB95R-1



Blurred on purpose. The manual you buy has this page in full quality.

PREVIEW - YOUFIXTHIS.COM

Download full manual at youfixthis.com

1. SAFETY MEASURES

1.1 GENERAL PRECAUTIONS

- The machine may only be used by authorised personnel specially trained for this purpose. The same precautions extend also to personnel entrusted with maintenance.
- While working or carrying out maintenance, all possible safety regulations, precautions and instructions should be observed.
- When more than one person is involved, and when the working area is frequently invaded by other Operators, make sure that they are all familiar with previously agreed signals, and that they are working where they can see the machine, and are themselves clearly visible to the Machine Operator.

1.2 SAFETY DEVICES

- Make sure that all protective shields and screens are firmly fixed in their appropriate sockets. If found to be damaged, replace or repair them immediately. Do not use the machine without shields, and do not remove the shields while moving.
- Always use the appropriate safety devices provided to block the machine when parked, and always wear the safety belt correctly.
- For the safety devices, see «9. SAFETY DEVICES».
- For the safety belt, see «13.4 SAFETY BELT».
- Never remove any of the safety devices and always keep them in a good state of repair.

1.3 PERSONAL PROTECTIVE CLOTHING AND EQUIPMENT

- Do not wear large garments or loose clothing, rings or wrist-watches, and do not approach the moving parts with long, unbound hair, which might get caught up in these moving parts and cause serious injury.
  Also avoid wearing clothing stained with oil or fuel, which might therefore catch fire more easily.
- When operating the machine or carrying out maintenance, wear starched overalls, protective goggles and overshoes, a mask, gloves, and antinoise earmuffs.
- Always wear protective goggles, starched overalls and heavy gloves to protect against minute metal splinters or shards of material. These precautions are particularly necessary when engaging, and therefore hammering the connecting pins used to assemble items of equipment, and when blowing out the air filter and radiator with compressed air. Make sure

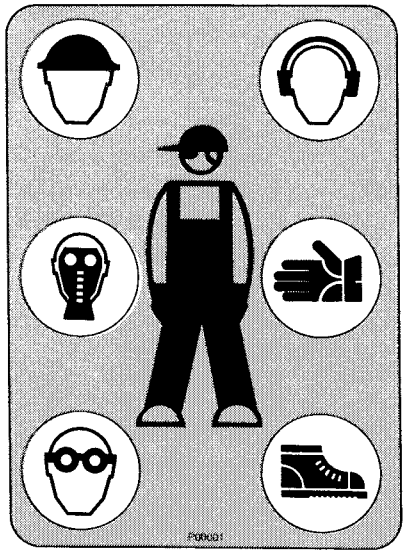

that no unprotected person is allowed in the vicinity during these operations.

- When working for a period of 8 hours at a noise-level of over 90 dBA, anti-noise earmuffs or ear plugs must be worn, and increased attention should be paid to this problem particularly towards the end of the work-shift.

1.4 UNAUTHORISED MODIFICATIONS

- No modification should be made to the machine without authorisation from FKI, because such modifications could create hazards.
- Before carrying out any modification, first consult your FKI Agent. FKI cannot be held responsible for any injury or damage caused by unauthorised modifications.

1.5 WHEN LEAVING THE DRIVING SEAT

- When it is necessary to leave the driving seat, even for a moment, make sure that the machine is parked on safe ground (See «3.11 PARKING THE MACHINE»).
- Before leaving the driving seat, carry out the following operations in this sequence:
  1 - Lower the equipment to the ground.
  2 - Put the controls into safety mode.
  3 - Put the hand-brake on.
  4 - Put the gear-lever and reverse gear into neutral.
  5 - Switch off the engine.

If going far enough away to lose sight of the machine, take the ignition key with you.

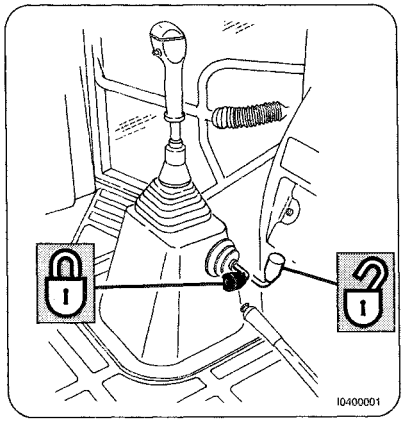

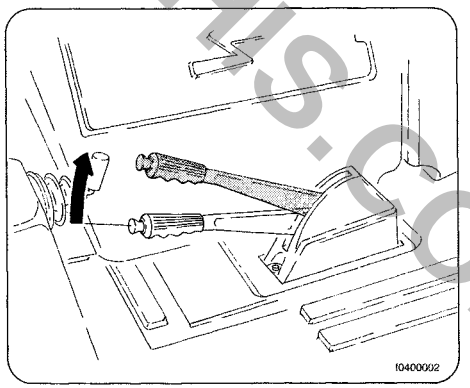

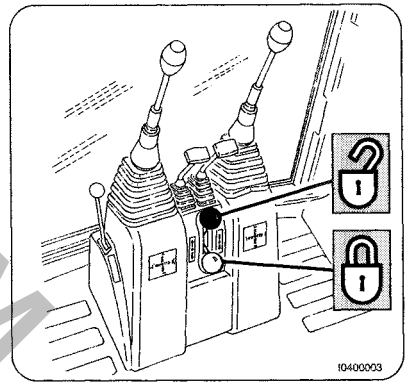

PREVIEW - YOUFIXTHIS.COM
Download full manual at youfixthis.com

		PAG.
10.	**GENERAL VIEWS**	47
10.1	• General front view	47
10.2	• General view of backhoe from the side	48
10.3	• General view of the inside of the cab	49
11.	**INSTRUMENTATION AND CONTROLS**	50
11.1	• Instruments, warning lights and push-buttons	50
11.1.1	• • Instruments	51
11.1.2	• • Warning lights	51
11.1.3	• • Push-buttons and switches	52
11.1.4	• • Electrical accessories	55
11.1.5	• • Backhoe push-buttons	55
11.2	• Machine controls	56
11.2.1	• • Machine controls	57
	1 - Gear lever - reverse gear	57
	2 - Brake pedals	60
	3 - Accelerator	60
	4 - Hand-brake	60
11.2.2	• • Front shovel controls	61
	5 - Shovel control lever	61
	6 - Transmission disengagement button	62
	7 - Differential blocking button	63
11.2.3	• • Backhoe controls	63
	8 - Manual accelerator	63
	9 - 10 - Backhoe control levers	64
	FKI SYSTEM CONTROLS	64
	CONTROLS CONFORMING TO ISO NORMS	66
	11 - 12 - Stabilizer control levers	67
	13 - Backhoe traverse blocking lever	67
12.	**FUSES AND RELAY**	68
13.	**CAB AND DRIVING SEAT**	70
13.1	• Description	70
13.2	• Ventilation and heating	72
13.3	• Driving seat	73
13.4	• Safety belt	74
13.5	• Positions of the fire extinguisher and first aid emercency kit	75
14.	**MACHINE OPERATION**	
14.1	• Checks to be made before starting the engine	77
14.1.1	• • Visual checks	77
14.1.2	• • Daily checks	77
14.1.3	• • Operating checks	78
14.2	• Starting the engine	79
14.2.1	• • Start-up with warm engine or in temperate climate	79
14.2.2	• • Start-up with a cold engine or in a cold climate	79
14.3	• Warming up the engine	80
14.4	• Warming up the hydraulic oil	80
14.5	• Setting the machine in motion	80
14.5.1	• • Blocking the differential	82
14.5.2	• • 4-wheel drive engagement	82
14.5.3	• • How to move on a slope	83
14.5.4	• • Maximum immersion depth	84
15.	**PARKING THE MACHINE**	85
15.1	• Parking on level ground	85
15.2	• Parking on a slope	86
16.	**STOPPING THE ENGINE**	87
17.	**TRANSPORTING THE MACHINE ON ANOTHER VEHICLE**	88
17.1	• Loading and unloading	88
17.2	• Transport	89
18.	**PRECAUTIONS TO BE TAKEN DURING COLD WEATHER**	89
18.1	• Fuel and lubricants	89
18.2	• Coolant liquid	89
18.3	• The battery	90
18.4	• Other precautions	91
18.5	• Precautions to be taken on completion of work	91
19.	**PRECAUTIONS TO BE TAKEN DURING HOT WEATHER**	91
20.	**USING THE MACHINE AS A LOADING SHOVEL**	92
20.1	• Shovel position indicator	92
20.2	• Organisation of the working area	92
20.2.1	• • Loading piled up or flat material	93
20.2.2	• • Loading material on a slope	94
21.	**USING THE MACHINE TO DIG**	95
21.1	• Adjustment of stabilizing width (for horizontally extensible stabilizers only)	95
21.2	• Positioning the bucket in function of the job to be done	95
21.3	• Positioning the machine for digging	96
21.4	• Sideways movement of the excavator group	98
21.5	• Digging method	99
21.6	• Changing the working equipment	100
21.6.1	• • Changing the front bucket	100
21.6.2	• • Changing the backhoe bucket	100
22.	**FAULT IDENTIFICATION**	101
22.1	• If the fuel tank is empty	101
22.2	• If the battery is flat	101
22.2.1	• • Start-up using auxiliary cables	102
22.3	• Other faults	104
22.3.1	• • Electrical circuit	104
22.3.2	• • Hydraulic circuit	105
22.3.3	• • Braking systems	105
22.3.4	• • Converter	106
22.3.5	• • Engine	107

PREVIEW - YOUFIXTHIS.COM
Download full manual at youfixthis.com

4. TRANSPORTING THE MACHINE ON ANOTHER VEHICLE

4.1 LOADING AND UNLOADING

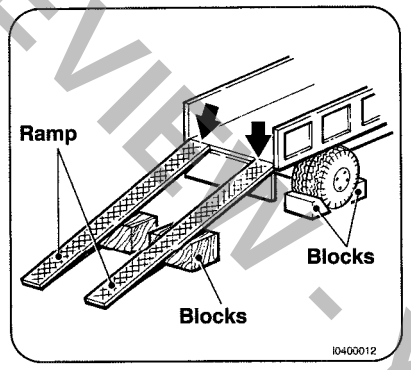

- Loading and unloading the machine onto and off another vehicle always involves some element of danger. Use the greatest care throughout the operation.
- Perform the loading and unloading manoeuvres on solid flat ground. Keep a safe distance from the edge of ditches or from the road.
- If properly equipped vehicles are not being used, place supporting blocks underneath the ramps to avoid bending.
- Always block the wheels of the transporting vehicle with wedges.
- Use ramps that are sufficiently wide and capable of supporting the weight of the machine, positioned with the longitudinal axes parallel to each other and perpendicular to the loading edge, and make sure that the distance between them is adjusted to the gauge of the machine.
- Make sure that the ramps are firmly attached to the loading edge and that they are of equal length.
- Check that the ramps have been cleaned of any trace of oil, grease, soil or ice. Remove all dirt even from the wheels of the machine, before beginning to load it.
- The machine must be loaded with the shovel tipped forwards, i.e. in the direction of movement of the vehicle.
- Do not correct steering on the ramps. If some correction is required, back down from the ramps and find the correct position before making another attempt.
- After loading, block the machine with wedges beneath the wheels and tie it down with cables or chains that also hold it steady at the sides. (See «17. TRANSPORTING THE MACHINE ON ANOTHER VEHICLE»).

4.2 TRANSPORT

- Work out the route to be followed, taking into account the width, height and weight of the transport vehicle and the machine. Check that the outer dimensions are compatible with the roads, tunnels, underpasses, bridges, power and telephone lines, etc. by which the load must pass.
- Take note of the regulations in force concerning permissible width, height, weight and speed of the transport.

5. THE BATTERY

5.1 PREVENTION OF RISKS DERIVING FROM THE BATTERY

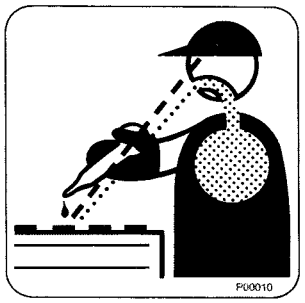

- Electrolytic batteries contain sulphuric acid which can burn and, if splashed onto clothing, will corrode the material enough to make holes in it. If you become contaminated with this acid, wash the area immediately with plenty of water.
- If battery acid gets into the eyes it can cause blindness.
  If acid accidentally gets into the eyes, wash them immediately with plenty of fresh water and consult a doctor as soon as possible.
- If you accidentally swallow some battery acid, drink plenty of water, milk, beaten egg white or vegetable oil, or anti-acids such as magnesium, bicarbonate of soda, etc.
  Call a doctor urgently, or go yourself at once to a poison-treatment centre.

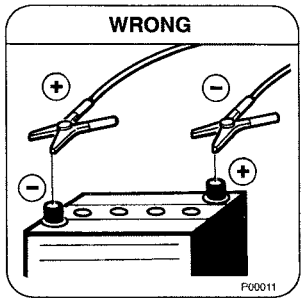

- When working with batteries, always wear safety goggles.
- Batteries produce hydrogen which is highly explosive and catches fire easily from sparks or naked flames.
- Before working on the batteries, switch off the engine and remove the ignition key.
- Avoid short-circuiting the battery, even accidentally, by connecting the terminals to metallic objects or tools, or by inverting the terminals.
- Screw the terminal clamps down tightly. Loose terminals can cause sparks which could lead to explosion of the battery.

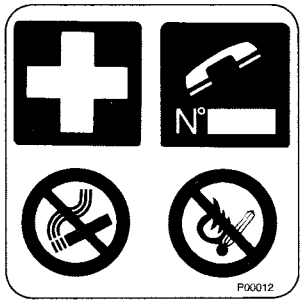

5.2 STARTING THE ENGINE WITH AUXILIARY CABLES

- When starting up the machine with auxiliary cables, always wear safety goggles.
- When starting up the engine from another vehicle, do not allow the two machines to touch each other.

PREVIEW - YOUFIXTHIS.COM
Download full manual at youfixthis.com

14.5.4 MAXIMUM IMMERSION DEPTH

DANGER

- **When working in water or on the banks of a river or the sea-side, check the depth of the water, and the direction and strength of the current.**
- **Always check carefully that the surface on which the machine is working is sufficiently firm.**

If it is necessary to work in water, make sure that the maximum immersion depth does not exceed 50 cm, and in any case that the engine cooling fan is not in contact with water, because it could be ruined or break.

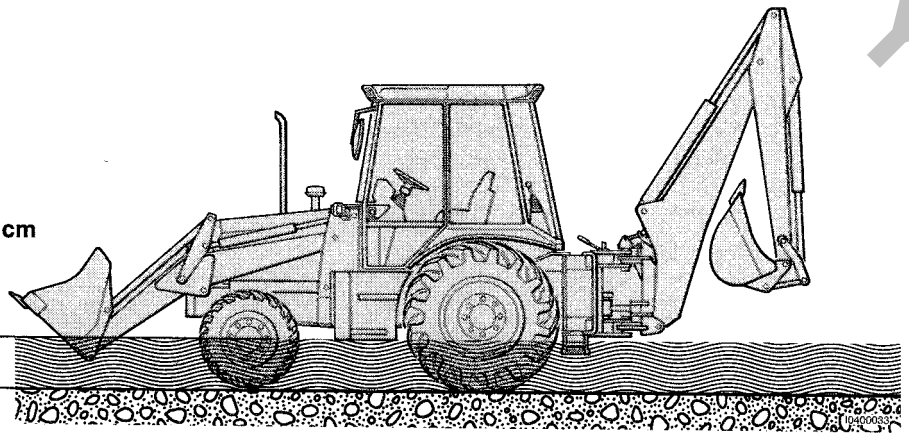

ATTENTION

- **When working in water or on muddy ground, lubricate the articulated joints more frequently than required by standard maintenance intervals.**
- **On completion of the work, remove all mud and dirt and lubricate all articulated joints.**

15. PARKING THE MACHINE

15.1 PARKING ON LEVEL GROUND

DANGER

- **Park the machine where the ground is firm, level and spacious enough to allow daily checks, lubrication and refuelling operations.**
- **Lower the shovel to the ground and put the backhoe into its transport position, or with the bucket resting on the ground.**
- **Apply all safety regulations in order to avoid any machine movement in the absence of the Operator.**
- **When leaving the machine, remove the ignition key, use the steps and hand-grips provided and lock the cab securely.**

1 - Park the machine on firm,level ground, and in a spacious area.
2 - Put the gear lever and the reverse gear into N position and engage the hand-brake.
3 - Lower the shovel and the backhoe bucket to the ground. If the available space does not permit this, the backhoe may be folded back into its transport position and secured with its special safety device.
4 - Insert the safety pin in the shovel control lever, and engage the safety lever of the backhoe control lever.
5 - Switch off the engine, following the procedure set out in paragraph «16. STOPPING THE ENGINE».
6 - Leave the driving seat using the steps and hand-grips provided.
7 - Refuel the machine, taking all necessary precautions.
8 - Remove the ignition key and lock the cab securely.

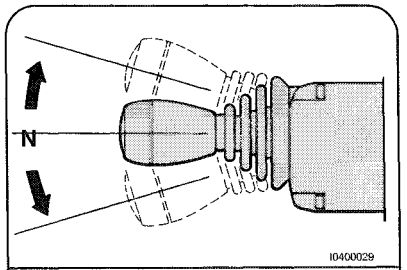

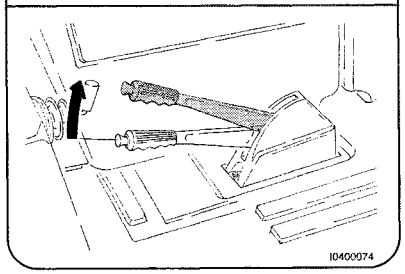

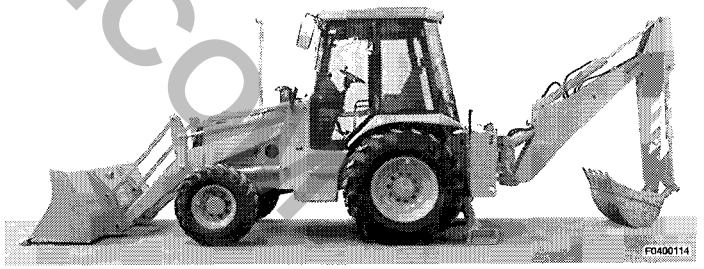

PREVIEW - YOUFIXTHIS.COM
Download full manual at youfixthis.com

25.3 LUBRICATION DIAGRAM
(For 4 in 1 bucket and forks for pallet)

IMPORTANT

- **For the other lubrication points see «25.1 and 25.2 LUBRICATION DIAGRAM».**
- **The points indicated are symmetrically placed and must be lubricated every 8 hours.**
- **The runner bars of the forks and the security pivots must be lubricated with grease only against oxidation.**
- **The articulated joints of the forks (A-B) should be lubricated only if the forks are used.**

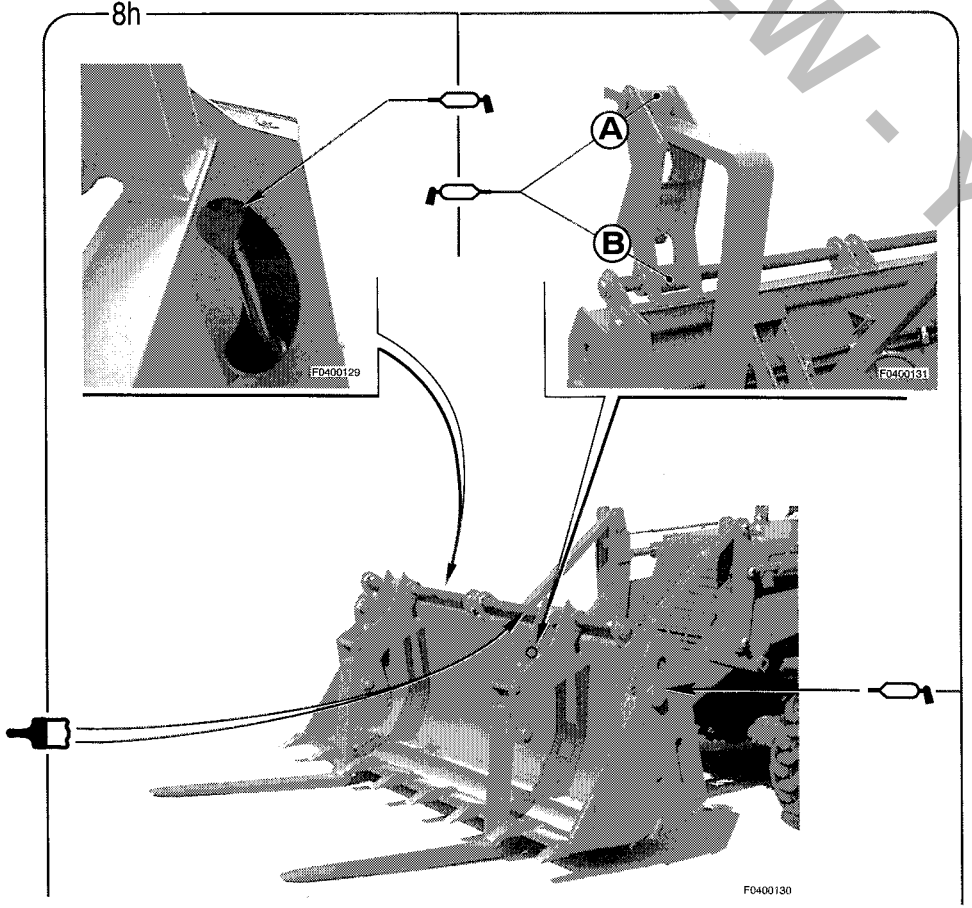

Grease Grease

25.4 LUBRICATION DIAGRAM
(For telescopic arm)

IMPORTANT

- **For the other lubrication points see «25.1 and 25.2 LUBRICATION DIAGRAM».**

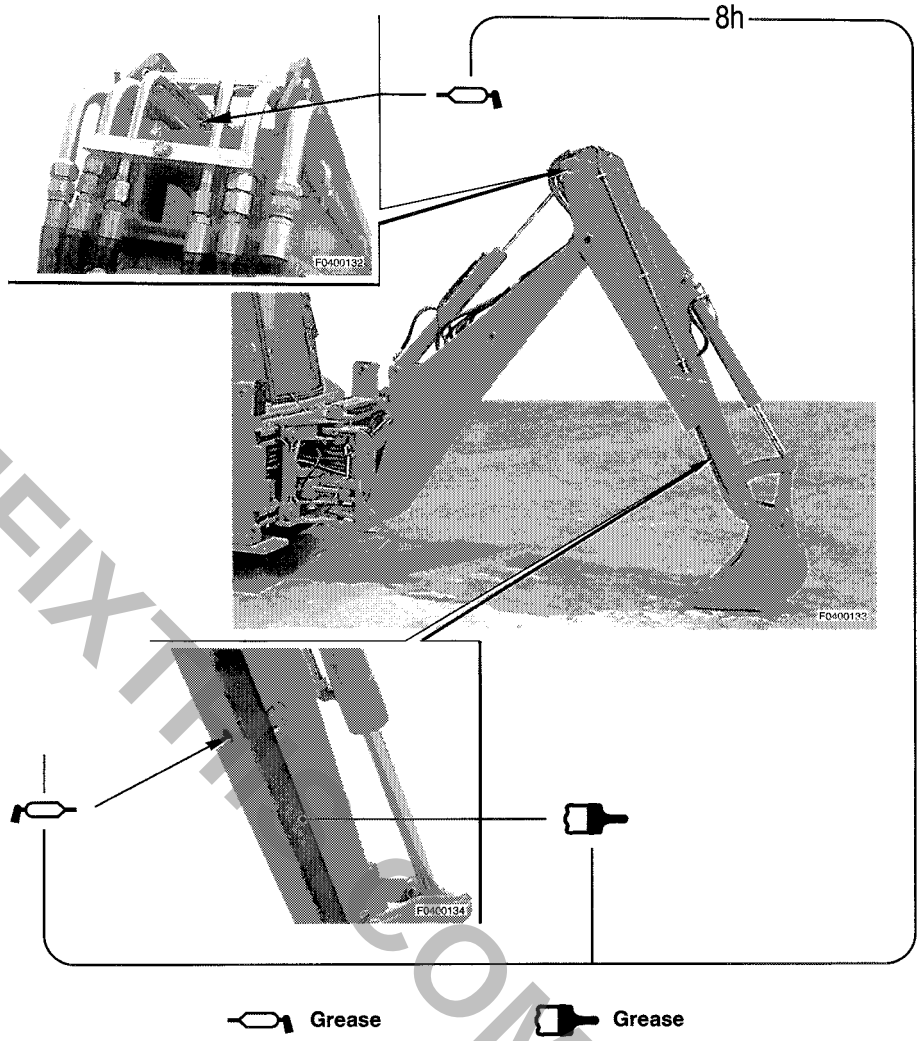

Grease Grease

PREVIEW - YOUFIXTHIS.COM
Download full manual at youfixthis.com

27.10 MAINTENANCE EVERY 2000 HOURS

★ Maintenance for every 50, 100, 250, 500 and 1000 hours should be carried out at the same time.

27.10.a CHANGING THE COOLANT LIQUID

DANGER

- **When the machine has just stopped working the coolant liquid is very hot and under pressure, and can cause serious burns. Before changing the liquid let the engine cool down to about 40-45°C.**
- **Loosen the radiator cap slowly to release residual pressure.**

IMPORTANT

- **The following operations refer to changing the permanent type of coolant liquid. If the coolant is plain water or water mixed with a seasonal anti-freeze agent, a descaling wash will be necessary (See «27.11.b. WASHING OUT THE COOLANT CIRCUIT»).**

1 - Loosen and remove the top radiator cap (1);
2 - Loosen and remove the bottom radiator cap (2) and let the liquid flow out;
(Use spanner of size 13 mm)
3 - Close the bottom cap (2) and refill the circuit;
4 - Start the engine and let is run at minimum revs for a few minutes. Check the level once again and top it up before replacing the top radiator cap (1).

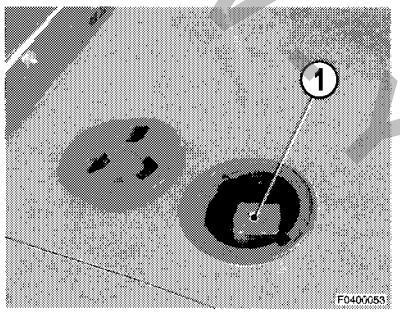

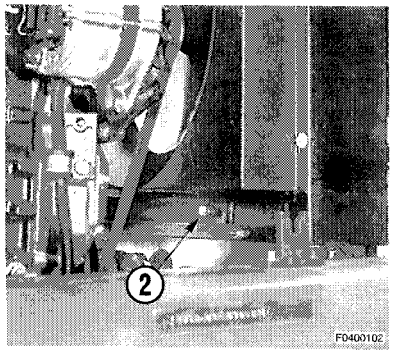

27.10.b CHANGING THE BRAKING SYSTEM OIL

DANGER

- **Any spilled oil can cause slipping, so clean up any soiled areas.**

Before changing this oil, it is advisable to brake the machine a few times to warm up and liquefy the oil, thus facilitating drainage. The machine should be standing on level ground, and held on the hand-brake, while the operations of oil change and circuit drainage are performed.
The procedure is as follows:

1 - Loosen the drain screws (1) (Use spanner of size 17 mm).
2 - Work the brake pedals (coupled together) until the oil contained in the tank is completely used up (2).
3 - Fill the tank (2) with virgin oil and continue the pumping action. Fill the tank up several times (2) until the spent oil has been changed completely (about 0.8 litres); replace the drain screw (1) and expel any remaining air. (Use spanner of size 10 mm)
For the type of oil to use see «25. FUEL, COOLANT AND LUBRICANTS»).

IMPORTANT

- **While draining attach a tube to the drain screws (3) in order to salvage the oil.**

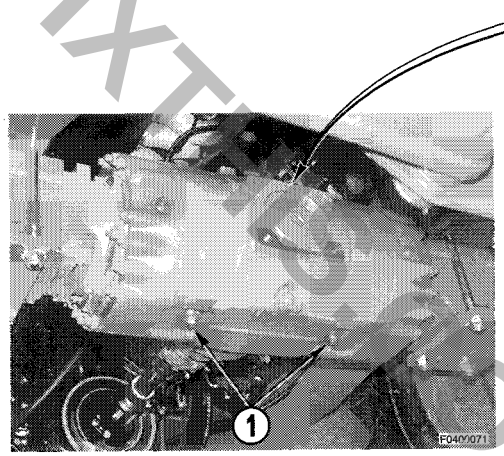

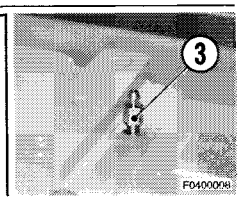

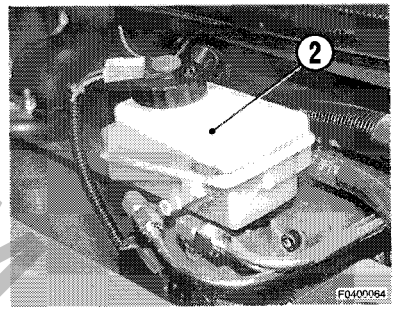

PREVIEW YOUFIXTHIS.COM
Download full manual at youfixthis.com

PREVIEW ONLY

You're viewing 11 of 112 pages

The full manual includes:

- All 112 pages, complete
- Searchable PDF (find any keyword)
- No watermarks
- Instant download
- Print-ready quality

GET FULL MANUAL NOW

Komatsu WB95R-1, WB97R-1 Operator Manual

Scan or click anywhere
youfixthis.com

Click anywhere on this page to get the full manual