E.2 Tightening torques

General tightening torques

Screw dimensions	Tightening torques in Nm[1]		
	8.8	10.9	12.9
M4	3	4	5
M5	5.5	8	10
M6	10	14	16
M8	23	34	40
M10	46	67	79
M12	79	115	135
M14	125	185	220
M16	195	290	340
M18	280	400	470
M20	395	560	660
M22	540	760	890
M24	680	970	1150
M27	1000	1450	1700
M30	1350	1950	2300

1. These values are valid for screws with untreated, non-lubricated surfaces.

Specific tightening torques

Designation	Tightening torque
Wheel nut	390 $^{\pm 10}$ Nm

PREVIEW - YOUFIXTHIS.COM

Battery main switch S008

Via the main battery switch **S008** the entire electrical system can be disconnected from the battery, preventing unauthorised persons from being able to start the engine.

Battery main switch **S008 A** is on the left of the engine compartment.

NOTICE

Interrupting the electrical circuit early can cause damage to the diesel engine and auxiliary heater (option).

- ► Never turn the battery main switch **S008** out of its position when the motor is running.
- ► Wait at least 30 seconds after stopping the engine.
- ► If the machine is equipped with an auxiliary heater, wait a minimum 2 minutes.
  After switching it off, the auxiliary heater still runs for about 2 minutes to cool down.

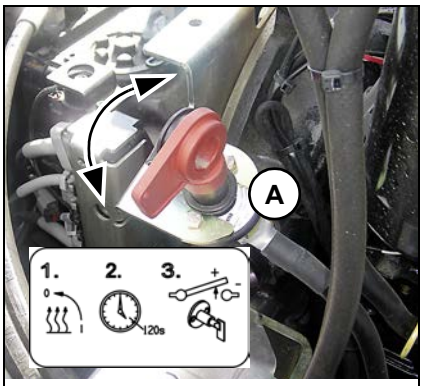

Fig. 1

Switching off the main battery switch S008

1. Stop the diesel engine with the starting key.
2. Wait at least 30 seconds, then turn key **A** out of the notched position and remove it.
   ➥ The entire electrical system is out of operation.
3. When using an auxiliary heater:
   Switch off the heater first, then wait at least 2 minutes (the heater continues running to cool down), then turn and remove key **A** out of the notched position.

Switching on the main battery switch S008

1. Put the key into the battery main switch **S008** and turn until it clicks into place.
   ➥ The entire electrical system is in operation.

Information

An external vehicle heater (opt.) cannot be operated if the battery main switch is turned off **S008** .

PREVIEW - YOUFIXTHIS.COM

1.2 Maintenance overview

Maintenance plan

Important information on the maintenance plan

In order to be able to claim on the warranty, maintenance operations, transfer-inspection, **A** 1st inspection at 100 o/h., **B** every 500 o/h and **C** every 1500 o/h (annually) must be carried out by an authorised service centre.

For service and maintenance on the attachment, please refer to the operation and maintenance manual of the attachment manufacturer as well.

Work description	Service centre	User/operator		Service centre		
Oil and filter changes (⇄)	Delivery inspection	Maintenance work (daily)	Every 20 o/h	"A" 1st Inspection at 100 o/h	"B" every 500 o/h	"C" every 1500 o/h once a year
Change the engine oil					●	●
Replace the engine oil filter					●	●
Replace the fuel filter, fuel prefilter					●	●
Replace the air filter insert					●	●
Replace the safety cartridge of the air filter insert[1]						●
Change the gearbox oil in the rear axle gearbox				●		●
Change the gearbox oil in the differential (front and rear axles)				●		●
Change the gearbox oil in the planetary drives on the left and right (front and rear axles)				●		●
Replace the hydraulic oil[2]						●
Replace the hydraulic oil filter insert (return)				●		●
Replace the cabin breather filter[3]					●	●
Replace the hydraulic oil reservoir breather filter						●
Replace the flat belt[4] of the water pump and alternator						●
Replace the flexible fuel lines[4]						●

1. When working in an acidic environment, replace the filter every 300 o/h
2. When using biodegradable oil in the hydraulic oil filter: drain the condensation water every 500 o/h, in any case before the cold season.
3. Depending on operation and dust conditions, it may be necessary to replace the fine-dust filter more frequently
4. Applies only to model 353-02 (Kohler engine KDI 2504TCR). Replace every 3 years if the machine is not used very often.

PREVIEW - YOUFIXTHIS.COM

Table of contents

E Introduction
E.1 Notes on the repair manual E-2
E.2 Tightening torques E-6
E.3 Safety instructions E-18

1 Maintenance
1.1 Information on maintenance 1-1
1.2 Maintenance overview 1-4
1.3 Fluids and lubricants 1-13
1.4 Maintenance accesses 1-17
1.5 Cleaning and maintenance 1-18
1.6 Lubrication work 1-24
1.7 fuel system 1-27
1.8 Engine lubrication system 1-38
1.9 Valve tip clearance (YANMAR-motor) 1-44
1.10 Cooling system 1-45
1.11 Air filter 1-52
1.12 V-belt/toothed belt 1-54
1.13 Hydraulic system 1-60
1.14 Electrical system 1-69
1.15 Heating, ventilation and air conditioning system 1-74
1.16 Washer system 1-80
1.17 Axles/travelling drive 1-81
1.18 Braking system 1-89
1.19 Maintaining the pressure accumulator 1-95
1.20 Tyres 1-98
1.21 Maintenance and care of attachment devices 1-102
1.22 Maintenance of options 1-103
1.23 Exhaust gas treatment 1-107
1.24 Machine preservation 1-108

2 Engine
2.1 Complete components (Yanmar motor) 2-2
2.2 Complete components (Kohler motor) 2-15
2.3 Motor starter M001 (Yanmar) 2-26
2.4 Motor starter M001 (Kohler) 2-28
2.5 Air filter 2-29
2.6 Exhaust silencer (Yanmar) 2-32
2.7 Exhaust silencer (Kohler) 2-34
2.8 Water separator (Yanmar) 2-36
2.9 Water separator (Kohler) 2-38
2.10 Coupling (Yanmar) 2-40
2.11 Coupling (Kohler) 2-42
2.12 Fuel tank 2-44
2.13 Tank sensor B001 2-49
2.14 Accelerator pedal (Yanmar) 2-52
2.15 Accelerator pedal (Kohler) 2-54

PREVIEW - YOUFIXTHIS.COM

Index

A

Abbreviations E-3
Accelerator pedal (Kohler)
disassemble 2-54
Install 2-54
Accelerator pedal (Yanmar)
disassemble 2-52
Install 2-53
Accident prevention regulations
general information E-19
Adding oil
Differential (front axle) 1-82
Differential (rear axle) 1-81
Planetary drives 1-84
Adjusting the height-adjustable trailer coupling
disassemble 17-3
Install 17-4
Air conditioning
Disassemble compressor 14-4
drain 1-77
Install compressor 14-5
Air conditioning compressor
disassemble 14-4
Install 14-5
Air filter 1-52
disassemble 2-29
Install 2-30
Alternator 1-71
Anticorrosion agents 1-19
Anticorrosion protection (option) 1-18, 1-108
Automatic trailer coupling
disassemble 17-5
Install 17-5
Axles 1-81

B

Ball coupling
disassemble 17-6
Install 17-6
Battery master switch 1-2
Biodegradable oils 1-16
Brake
Replacing brake linings 6-7
Brake linings
Replace 1-93
Brake pedal
Adjust 6-4
disassemble 6-2
Install 6-3
Braking system
Check the brake fluid 1-90
Safety instructions 1-89
Braking system maintenance 1-89

C

Cardan shaft
disassemble 4-2
Install 4-3
Central lubrication system 1-105
disassemble 23-2
Install 23-2
Change the oil
Differential (front axle) 1-83
Differential (rear axle) 1-81
Planetary drives 1-85
Changing the gearbox oil
High-speed gearbox 1-86, 1-87
Charge-air cooler
Draining condensation water 1-51
Checking the oil
Differential (front axle) 1-82
Differential (rear axle) 1-81
Planetary drives 1-84
Checking/replacing the battery 1-70
Cladding between cab and engine cover
disassemble 12-14
Install 12-14
Clean
Inside the cabin 1-20
Motor and engine compartment 1-23
On the outside of the machine 1-22
Seat belt 1-20
Cleaning and maintenance 1-18
Control lever
disassemble 9-16
Install 9-17
Control unit
disassemble 8-3
Install 8-6
Coolant 1-15
Cooler (Kohler)
disassemble 3-8
Install 3-10
Cooler (Yanmar)
disassemble 3-3
Install 3-5
Cooling system 1-45
Counterweight
disassemble 12-10
Install 12-11
Coupling (Kohler)
disassemble 2-42
Install 2-43
Coupling (Yanmar)
disassemble 2-40
Install 2-41

PREVIEW - YOUFIXTHIS.COM

E.3 Safety instructions

Pay particular attention to the following

The information in this repair handbook must be read and observed in order to avoid risks to all persons who use, maintain, repair, service or inspect this machine.

In particular, please read this section on safety.

Safety symbols and signal words

Explanation

The following symbol identifies safety instructions. It is used for warning against potential personal risk or danger.

DANGER

DANGER identifies a situation causing death or serious injury if it is not avoided.

Consequences in case of nonobservance.

► Avoidance of injury or death.

WARNING

WARNING identifies a situation that can cause death or serious injury if it is not avoided.

Consequences in case of nonobservance.

► Avoidance of injury or death.

CAUTION

CAUTION identifies a situation that can cause injury if it is not avoided.

Consequences in case of nonobservance.

► Avoidance of injury.

NOTICE

NOTICE identifies a situation that causes damage to the machine if it is not observed.

► Avoidance of damage to property.

The warning labels on the machine provide important information about how to operate the machine safely. Complying with these labels is for your safety!

PREVIEW - YOUFIXTHIS.COM

3 Radiator
3.1 Cooler (Yanmar) ... 3-2
3.2 Cooler (Kohler) ... 3-7
3.3 Fuel cooler (Kohler) ... 3-13
3.4 Expansion tank (Yanmar) ... 3-15
3.5 Expansion tank (Kohler) ... 3-17
3.6 Fan impeller (Yanmar) ... 3-21
3.7 Fan impeller (Kohler) ... 3-26

4 Gearbox/coupling/cardan shaft
4.1 Cardan shaft ... 4-2
4.2 Variable displacement motor ... 4-4

5 Axles
5.1 Front axle ... 5-2
5.2 Rear axle ... 5-8
5.3 Front axle screw connections ... 5-14
5.4 Planetary gears and joint housing ... 5-15
5.5 Double cardan shaft ... 5-32
5.6 Intermediate gearbox ... 5-36
5.7 Sealing the rear axle in case of oil migration (axle/gearbox) ... 5-43
5.8 Setting the gear drive ... 5-50
5.9 Differential cage/differential lock screw connections ... 5-55
5.10 Overview of differential lock and differential cage ... 5-56
5.11 Removing the differential cage with the differential lock ... 5-57
5.12 Differential lock ... 5-59

6 Brakes
6.1 Brake pedal ... 6-2
6.2 Main brake cylinder 030 ... 6-5
6.3 Replacing brake linings ... 6-7
6.4 Sealing the brake calliper ... 6-10
6.5 Handbrake ... 6-14

7 Steering system
7.1 Steering orbitrol IV ... 7-2
7.2 Check block XXII ... 7-7
7.3 All-wheel/front wheel steering selector valve XXV ... 7-10
7.4 All-wheel/front wheel/crab mode steering selector valve XXVI ... 7-14
7.5 Steering cylinder ... 7-18
7.6 Steering sensor B004/B005 ... 7-26
7.7 Synchronising the steering system ... 7-30

PREVIEW - YOUFIXTHIS.COM

1.4 Maintenance accesses

Engine cover

CAUTION

Injury hazard due to hot and moving engine parts!

Hot and moving engine parts can cause injury.

► Do not open the engine cover if the engine is running.

► Let the engine cool down.

► Wear protective equipment.



Fig. 4

Opening the engine cover:

1. Stop the engine and remove the starting key.
2. Unlock lock **A** with the starting key
3. Press lock **A**
   ➥ The engine cover is raised over the gas pressure absorber

Closing the engine cover:

1. Firmly press down the engine cover until lock **A** engages with an audible click
2. Lock the engine cover with the starting key

Lower engine vat

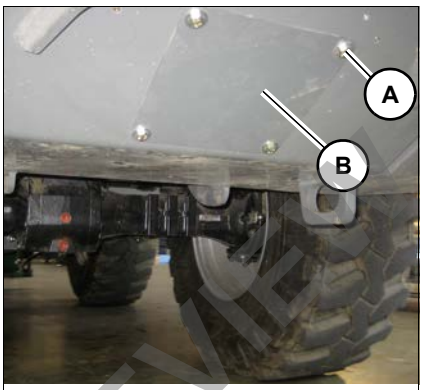

Fig. 5

Opening the cover

CAUTION

Injury hazard due to falling cover!

Can cause bruises and injury on head and face.

► Hold the cover when you remove the last screw.

1. Stop the engine and remove the starting key.
2. Unscrew screws **A** with a wrench (10 mm).
3. Remove cover **B**.

Closing the cover

4. Close cover B again with screws A.

PREVIEW - YOUFIXTHIS.COM

Checking/tightening the V-belt (A/C system)

CAUTION

Injury hazard due to rotating parts!

Rotating parts can cause serious injury.

► Stop the engine before opening the engine cover.

► Only check the V-belt when the engine is at a standstill.

NOTICE

A cracked and stretched V-belt causes engine damage!

► Replace the damaged V-belt.

► Replace the V-belt every 2 years at the latest.

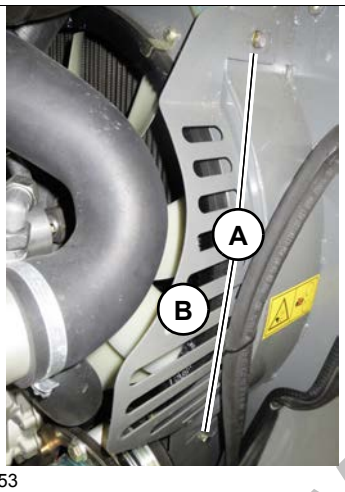

Fig. 53

1. Park the machine on level ground.
2. Lower the loader unit fully.
3. Apply the parking brake.
4. Stop the engine and remove the starting key.
5. Open the engine cover.
6. Remove screws **A** and take off protective guard **B**.

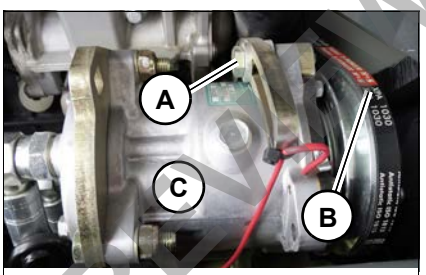

Fig. 54

7. Check V-belt **B** for damage.
   ➥ Replace damaged V-belt **B** – *see "Replacing the V-belt (A/C system)" on page 1-59*.
8. Press with thumb to check that the V-belt **B** cannot be pushed in between the belt disk by any more than **approx. 10 mm (0.4 in)**.
   ➥ Retighten V-belt as required **B** and as described below.
9. Loosen screw **A** and push in air conditioning compressor **C** as far as is required to attain the required belt tension. (AF 17)
10. Tighten screw **A**. (AF 17)
11. Check belt tension

PREVIEW - YOUFIXTHIS.COM

Checking the tires

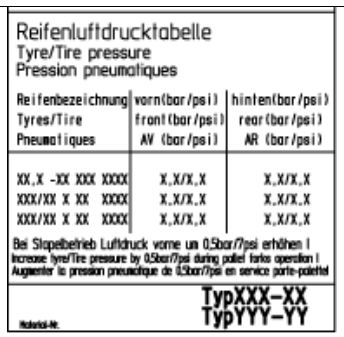
Reifenluftdrucktabelle
Tyre/Tire pressure
Pression pneumatiques

Reifenbezeichnung Tyres/Tire Pneumatiques	vorn(bar/psi) front(bar/psi) AV (bar/psi)	hinten(bar/psi) rear(bar/psi) AR (bar/psi)
XX.X -XX XXX XXXX	X,X/X,X	X,X/X,X
XXX/XX X XX XXXX	X,X/X,X	X,X/X,X
XXX/XX X XX XXXX	X,X/X,X	X,X/X,X

Bei Stapelbetrieb Luftdruck vorne um 0,5bar/7psi erhöhen !
Increase tyre/Tire pressure by 0,5bar/7psi during pallet forks operation !
Augmenter la pression pneumatique de 0,5bar/7psi en service porte-palette

TypXXX-XX
TypYYY-YY

Fig. 106

Information

Observe the maintenance intervals – *see "Maintenance plan" on page 1-4*.

Regular checks for damage and of the tire pressure increase operational safety and the service life of the tires, and reduce the machine's downtimes.

1. Check the tire pressure with a measuring instrument.
   ➥ Refer to the label on the front window or in the Operator's Manual.
2. Check the tires and the rims – also on the inside – for cracks, ageing and tread thickness.
3. Remove foreign bodies from the tire tread (or have them removed).
4. Remove traces of oil and grease from the tires.
5. Have the wheel nuts checked for correct seating and retightened if necessary (or check and retighten them)
   – see chapter 9 "Anzugsdrehmomente" on page 9-16.

PREVIEW - YOUFIXTHIS.COM

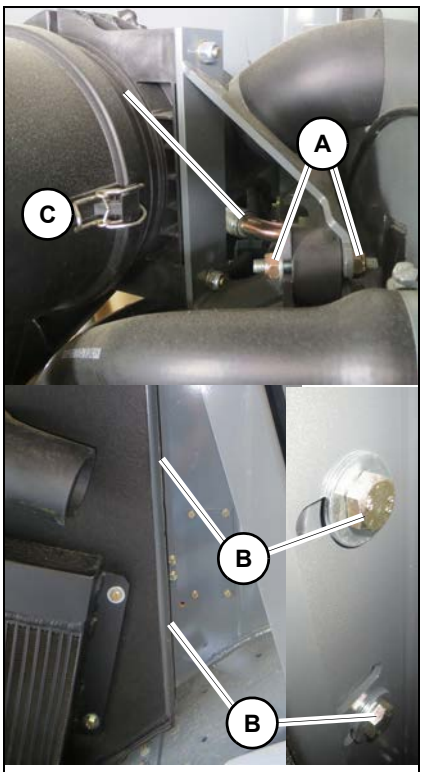

Fig. 199

6. Loosen nuts **A** and take out rubber buffer (AF17).
7. Remove the screws **B** (AF17).
8. Take out air filter **C** and holder.

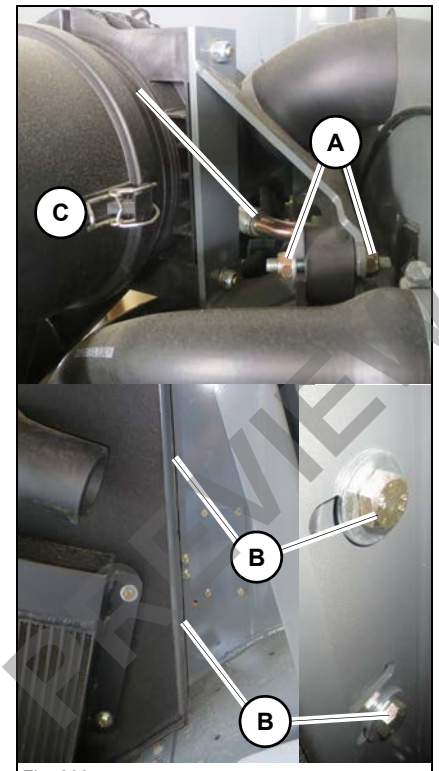

Fig. 200

Install

1. Position air filter **C** and holder.
2. Position screws **B** but do not tighten.
3. Position rubber buffer, but do not tighten.
4. Tighten the screws **B** (AF17).
5. Tighten nuts **A** (A/AF17).

PREVIEW - YOUFIXTHIS.COM

3.5 Expansion tank (Kohler)

Preparation for work

Tools: Collecting container for coolant

Technical Specifications

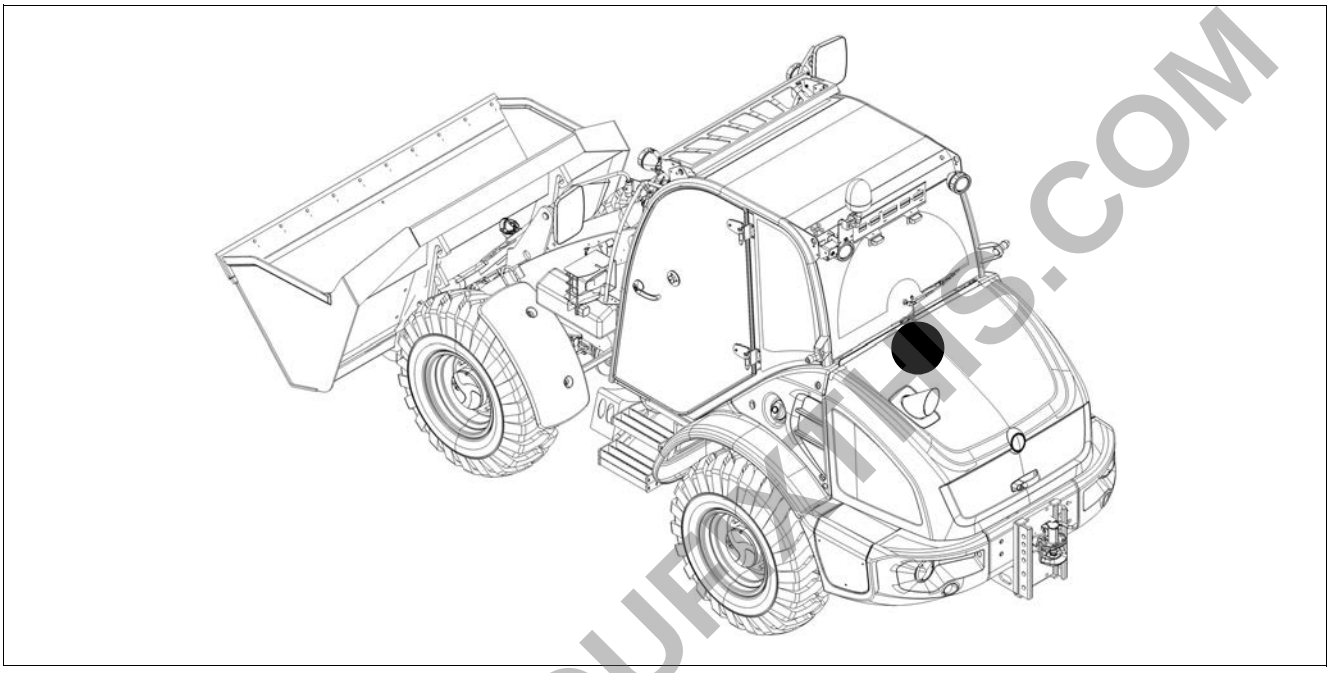

	Value	KCN	Comment/designation	
			Coolant reservoir	
Tightening torques without specification, see chapter: Introduction/Tightening torques				

Disassemble

WARNING

Caustic injury hazard! Risk of swallowing antifreeze when handling it!

Can cause serious injury or death

► Seek medical attention immediately if antifreeze has been swallowed.

► Keep antifreeze out of reach of children.

PREVIEW - YOURKHS.COM

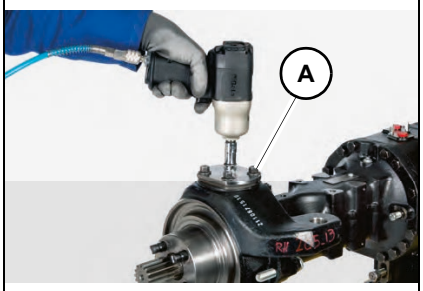

Fig. 365

28. Unscrew the fastening screws **A** from the upper axle mounting pin.

Environment
Dispose of the fastening screws correctly.

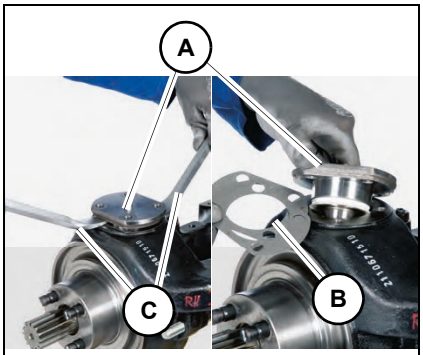

Fig. 366

29. Push off bearing bolt **A** with two assembly levers **C**.
30. Dismount the sealing ring **B** and spacer disk.

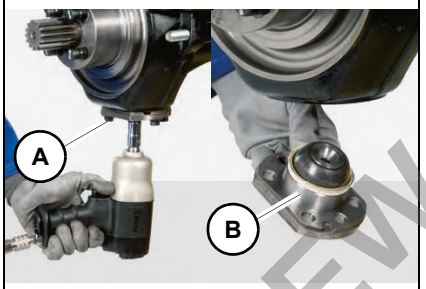

Fig. 367

31. Unscrew the fastening screws **A** from the lower planetary drive bearing.

Environment
Dispose of the fastening screws correctly.

32. Remove lower axle mounting pin **B** .

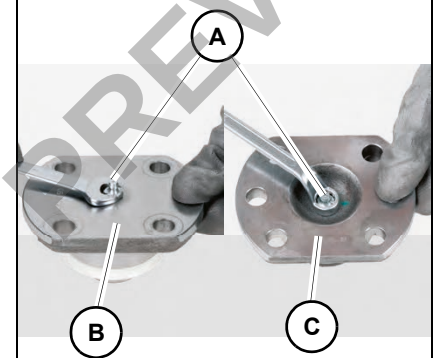

Fig. 368

If necessary:
33. Dismount grease zerk **A** with plugs on the upper axle mounting pin **B** and lower axle mounting pin **C** .

PREVIEW - YOUFIXTHIS.COM

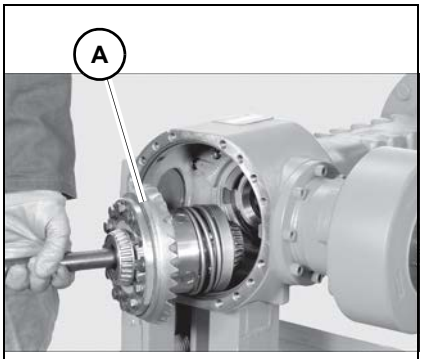

Fig. 498

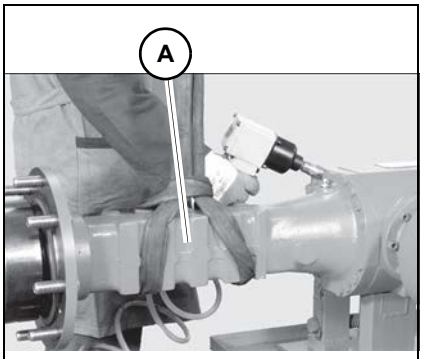

Fig. 499

6. Insert differential cage **A** and latching device into piston.

7. Clean flange surface at axle tube.
8. Mount entire axle tube **A**.

PREVIEW - YOUFIXTHIS.COM

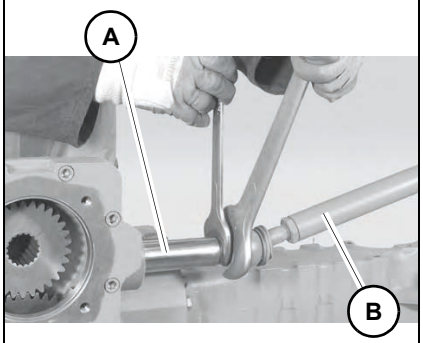

Fig. 578

6. Hold the steering cylinder **A** to counter the movement and then unscrew the guide rod **B**.

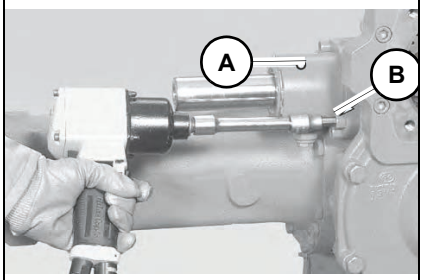

Fig. 579

7. Dismount the fastening screws **B** on the steering cylinder **A**.

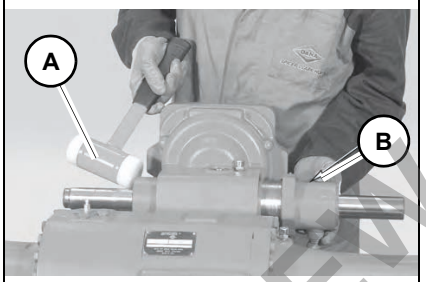

Fig. 580

Environment
Use a suitable container to collect the oil as it drains off and dispose of it in an environmentally friendly manner!

8. Drain off the oil from the cylinder chambers.
9. Use a plastic hammer **B** to drive out the steering cylinder **A**.

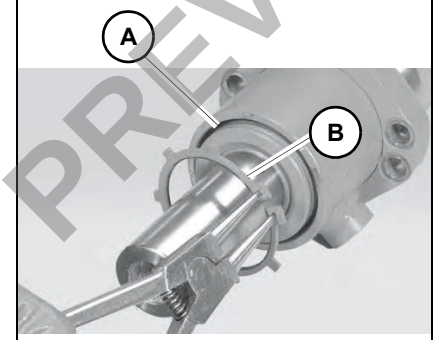

Fig. 581

10. Decompress the circlip **B** from the steering cylinder **A**.

PREVIEW - YOUFIXTHIS.COM

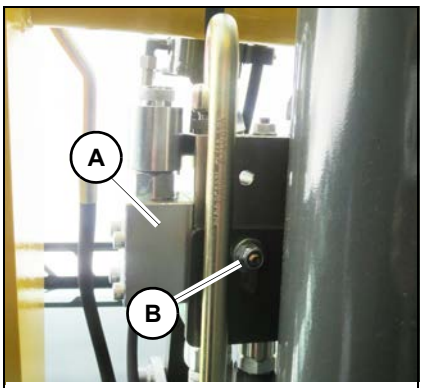

Fig. 666

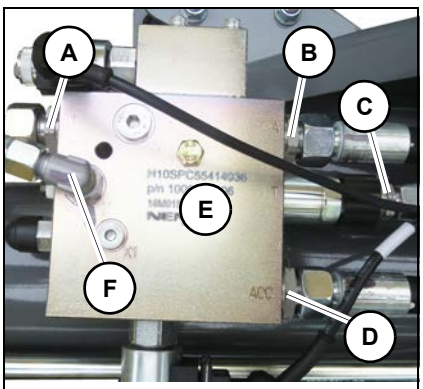

Fig. 667

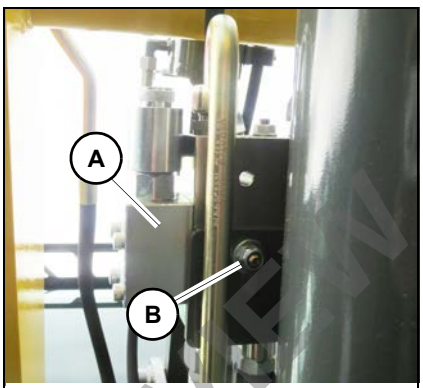

Fig. 668

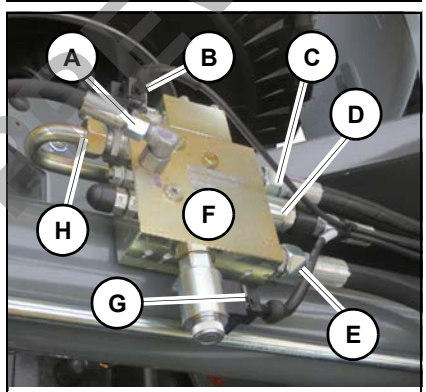

Fig. 669

15. Remove nut **B**.
16. Remove hose burst valve **A**.

Install

If a new hose burst valve **XV** needs to be integrated:

1. Insert new thread **A** into the hose burst valve **E XV** and tighten to 95 Nm (AF 27).
2. Insert new thread **B** into the hose burst valve **E XV** and tighten to 95 Nm (AF 27).
3. Insert new thread **C** into the hose burst valve **E XV** and tighten to 95 Nm (AF 27).
4. Insert new thread **D** into the hose burst valve **E XV** and tighten to 95 Nm (AF 27).
5. Insert new screw-in angle **F** into hose burst valve **E XV** and position as shown in *Fig. 667*.
6. Tighten screw-in angle **F** to 35 Nm (AF 19).
7. Position hose burst valve **A**.
8. Tighten nut **B**.

Information

Tighten screw connections only by counter holding at thread, screw-in angle or lifting cylinder.

9. Position line at hose burst valve **F XV** and tighten screw connection **H** to 60 Nm (AF27).
10. Position hose at hose burst valve **F XV** and tighten screw connection **E** to 60 Nm (AF27).
11. Position hose at hose burst valve **F XV** and tighten screw connection **D** to 60 Nm (AF27).
12. Position hose at hose burst valve **F XV** and tighten screw connection **C** to 60 Nm (AF27).
13. Position hose at hose burst valve **F XV** and tighten screw connection **A** to 23 Nm (AF17).
14. Insert connector **B Y022** and connector **G Y020** .

PREVIEW - YOUFIXTHIS.COM

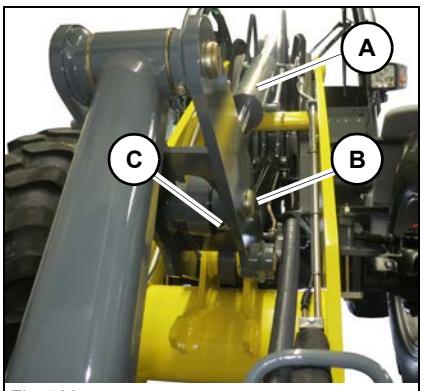

Fig. 726

11. Hook up tilt ram **A 087** to suitable lifting tackle.
12. Remove lock screw **C** (hexagon socket AF8, AF17).
13. Dismount bolt **B**

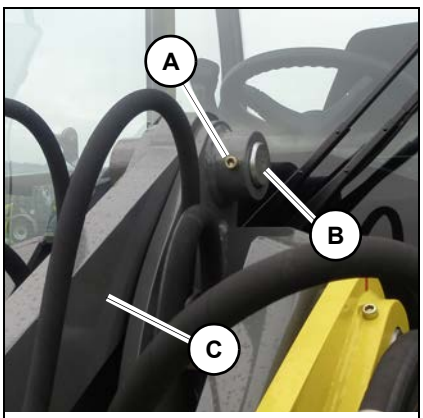

Fig. 727

14. Remove lock screw **A** (hexagon socket AF8, AF17).
15. Drive out bolt **B**.
16. Take out tilt ram **C 087** with lifting tackle.

PREVIEW - YOUFIXTHIS.COM

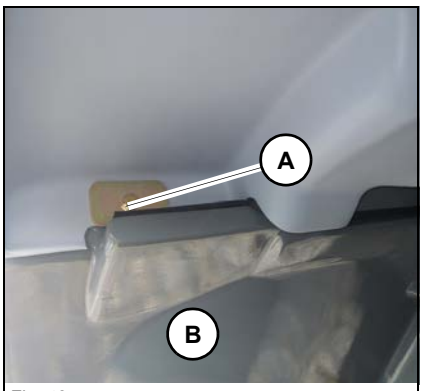

Fig. 48

3. Remove screws **A** with disks from right counterweight **B** (AF13).
4. Repeat work step on left counterweight.

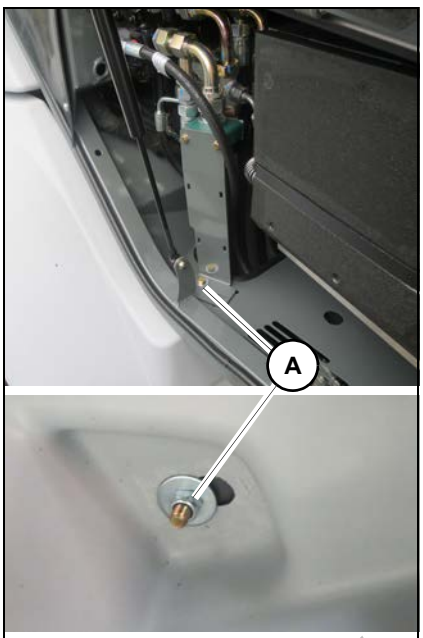

Fig. 49

5. Open maintenance flap on right side of cab.
6. Remove screw connections **A** from cab (AF13).

PREVIEW - YOUFIXTHIS.COM

PREVIEW ONLY

You're viewing 18 of 500 pages

The full manual includes:

- All 500 pages, complete
- Searchable PDF (find any keyword)
- No watermarks
- Instant download
- Print-ready quality

GET FULL MANUAL NOW

Kramer 5075, 5075L, 5085, 5085L, 5095, 5095L, 353-00S, 353-00L, 353-01S, 353-01L, 353-02S, 353-02L Repair Manual

Scan or click anywhere
youfixthis.com

Click anywhere on this page to get the full manual