Instructions for Parts Books

The heading at the top of the page will be the same for the picture of the parts at it is for the page with the part numbers.

Definition of column headings on part number pages:
REF.No → The number referring to the part on the picture page of the parts book.

Part No. → The number assigned to this part at the time of printing the parts book.

Description →Description of part.

Q'ty → Quantity of part used on that page.

S.No. → Serial number range of the equipment that this part will fit.

>= Your serial number should be greater than or equal to the number shown.
<= Your serial number should be lesser than or equal to the serial number shown.

I/C → Interchangeability of part shown.
←→ The part shown will work for the older and later serial number.
The part shown is not interchangeable with the other serial number.
← new for old
→ old for new

Remarks → Notes about this particular part. Sometimes this may say except [FR] or [CA]

Note about Country Codes:

The parts books we use in the United States of America may also contain information about a part that would be different in another country. It is important that you are aware of the country codes in some instances.

Symbol Country
A United States of America
CA Canada
FR France
GR Greece
PO Portugal
AU Australia

If the remark column says for example EXCEPT [FR] this part works in all countries except France.
That means it will work here in the USA.

Excavators & Wheel Loaders

Country symbols sometimes used:
KCL - Kubota Canada Ltd
KTA - Kubota Tractor Australia
KTC - Kubota Tractor Corp. (USA)

PREVIEW - YOUFIXTHIS.COM

Download full manual at youfixthis.com

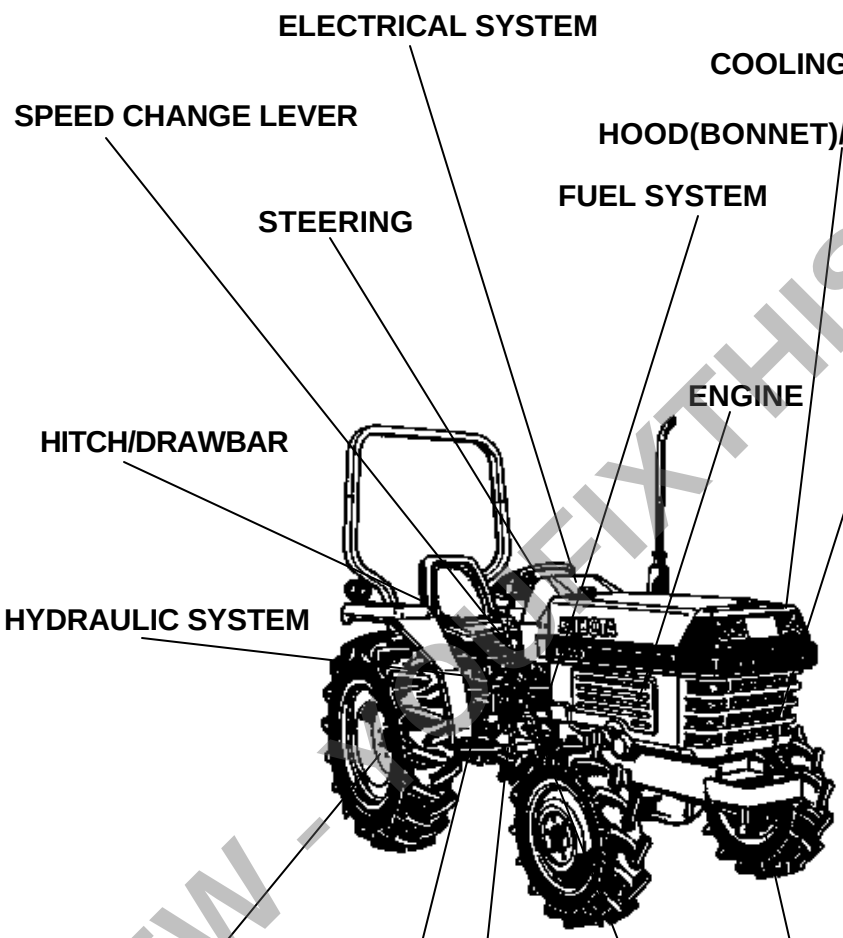

LABELS
ACCESSORIES

PREVIEW - YOUFIXTHIS.COM

Download full manual at youfixthis.com

Kubota **CRANKCASE**

↔ Interchangeable; ≠ not interchangeable; ← new for old; → old for new

REF.No	Part No.	Description	Q'ty	S.No.	I/C	REMARKS	Weight (kgf)	Weight (lb)
010	16417-01010	COMP.CRANKCASE	1				48.5	106.7
020	15521-96020	PLUG	5				0.003	0.0066
030	15521-96030	PLUG	2				0.007	0.0154
040	17391-96160	PLUG EXPANSION	3				0.003	0.0066
050	06311-75045	PLUG EXPANSION	1				0.026	0.0572
060	15221-03380	CAP SEALING	5				0.017	0.0374
070	16111-03390	CAP SEALING	2				0.027	0.0594
080	05012-00408	PIN STRAIGHT	2				0.001	0.0022
090	05012-00609	PIN STRAIGHT	2				0.003	0.0066
100	05012-00612	PIN STRAIGHT	2				0.003	0.0066
110	05012-01018	PIN STRAIGHT	1				0.012	0.0264
120	15221-33650	PIN PIPE	1				0.004	0.0088
130	06311-85020	CAP SEALING	1				0.002	0.0044
140	15221-33610	PLUG	1				0.009	0.0198
150	15021-33660	GASKET	1				0.001	0.0022
160	15221-33700	O RING	1				0.001	0.0022
170	15471-35010	ASSY PUMP OIL	1				0	0
180	15296-35150	GASKET OIL PUMP	1				0	0
180	1A021-35150	GASKET OIL PUMP	1		«		0.001	0.0022
190	01053-50650	BOLT	4				0.011	0.0242
200	04512-60060	WASHER SPRING	4				0.001	0.0022
210	19202-35660	GEAR OIL PUMP DRIVE	1				0.23	0.506
220	05712-00410	KEY FEATHER	1				0.001	0.0022
230	15221-35682	NUT FLANGE	1				0.014	0.0308
240	15531-39010	SWITCH OIL	1				0.032	0.0704
250	06312-10020	PLUG	1				0.016	0.0352

PREVIEW - YOUFIXTHIS.COM

Download full manual at youfixthis.com

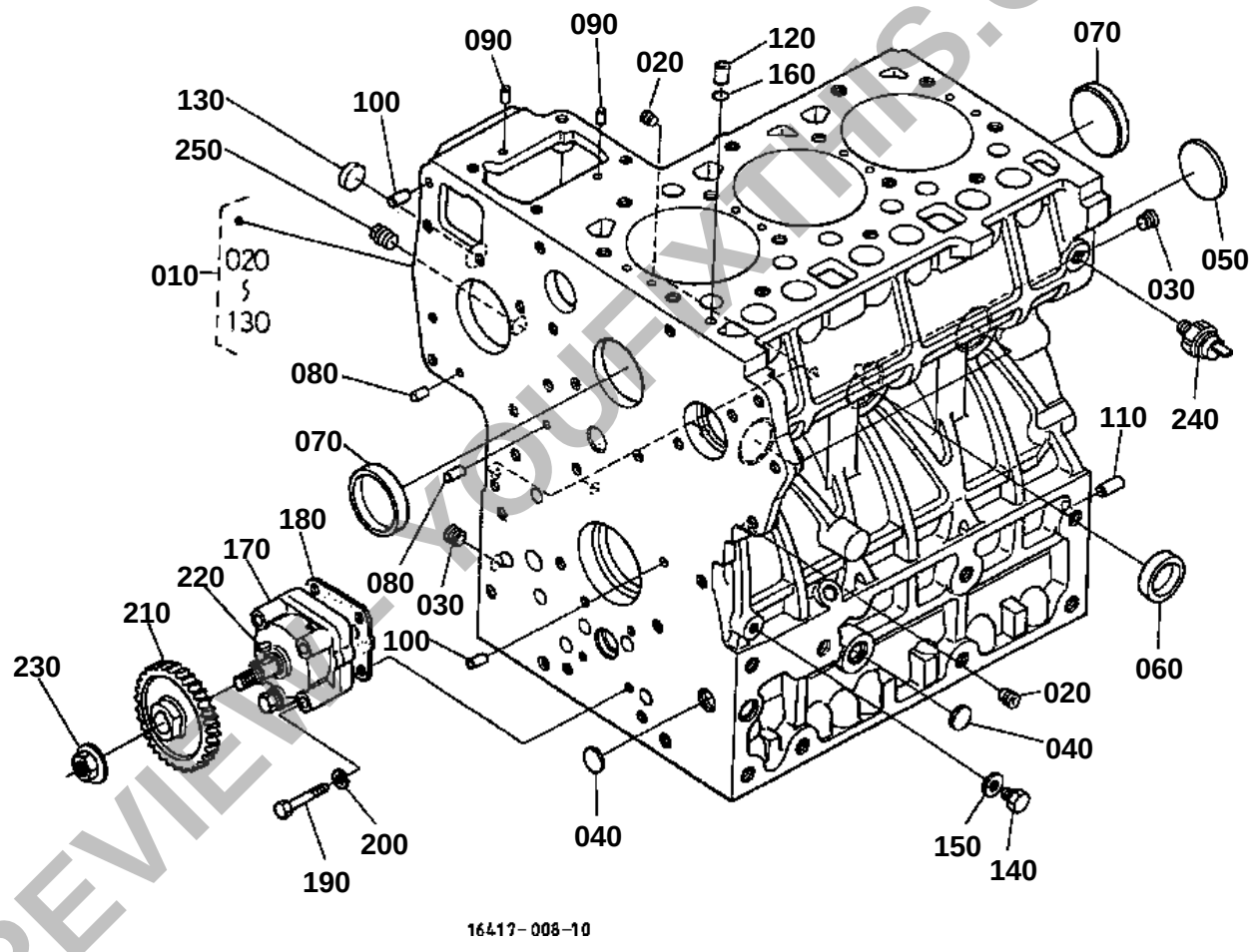

16417-008-10

PREVIEW OF YOUFIXTHIS.COM

Download full manual at youfixthis.com

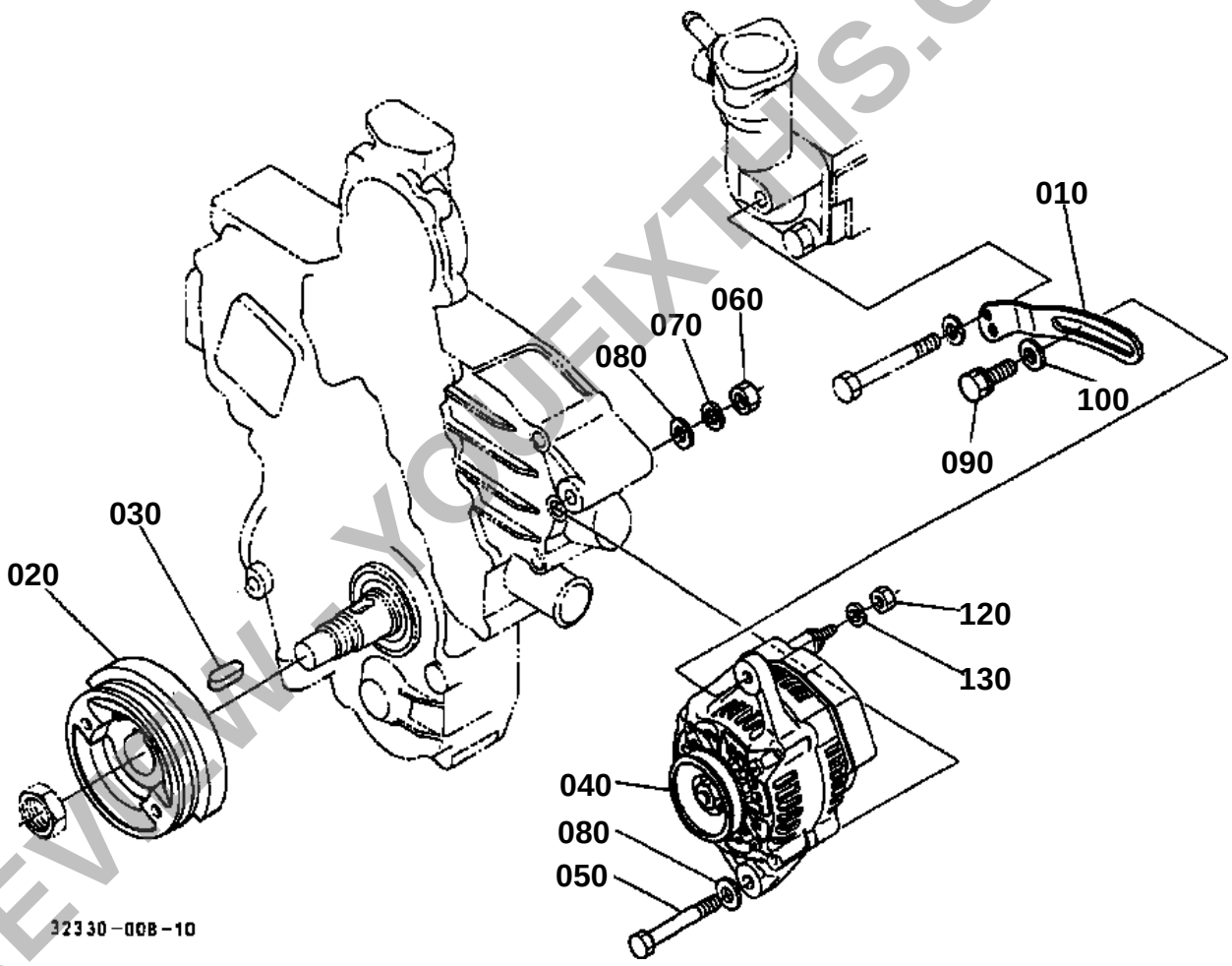

PREVIEW - YOUFIXTHIS.COM

Download full manual at youfixthis.com

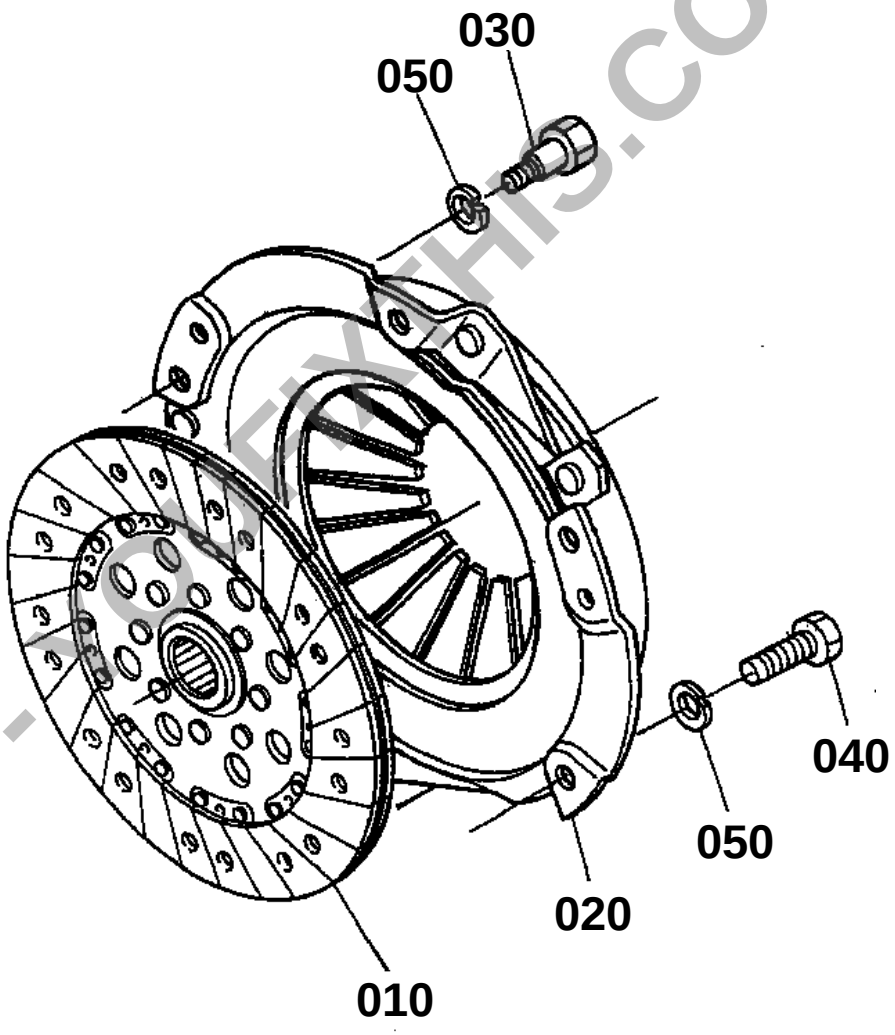

32310-026-10

PREVIEW - YOUFIXTHIS.COM

Download full manual at youfixthis.com

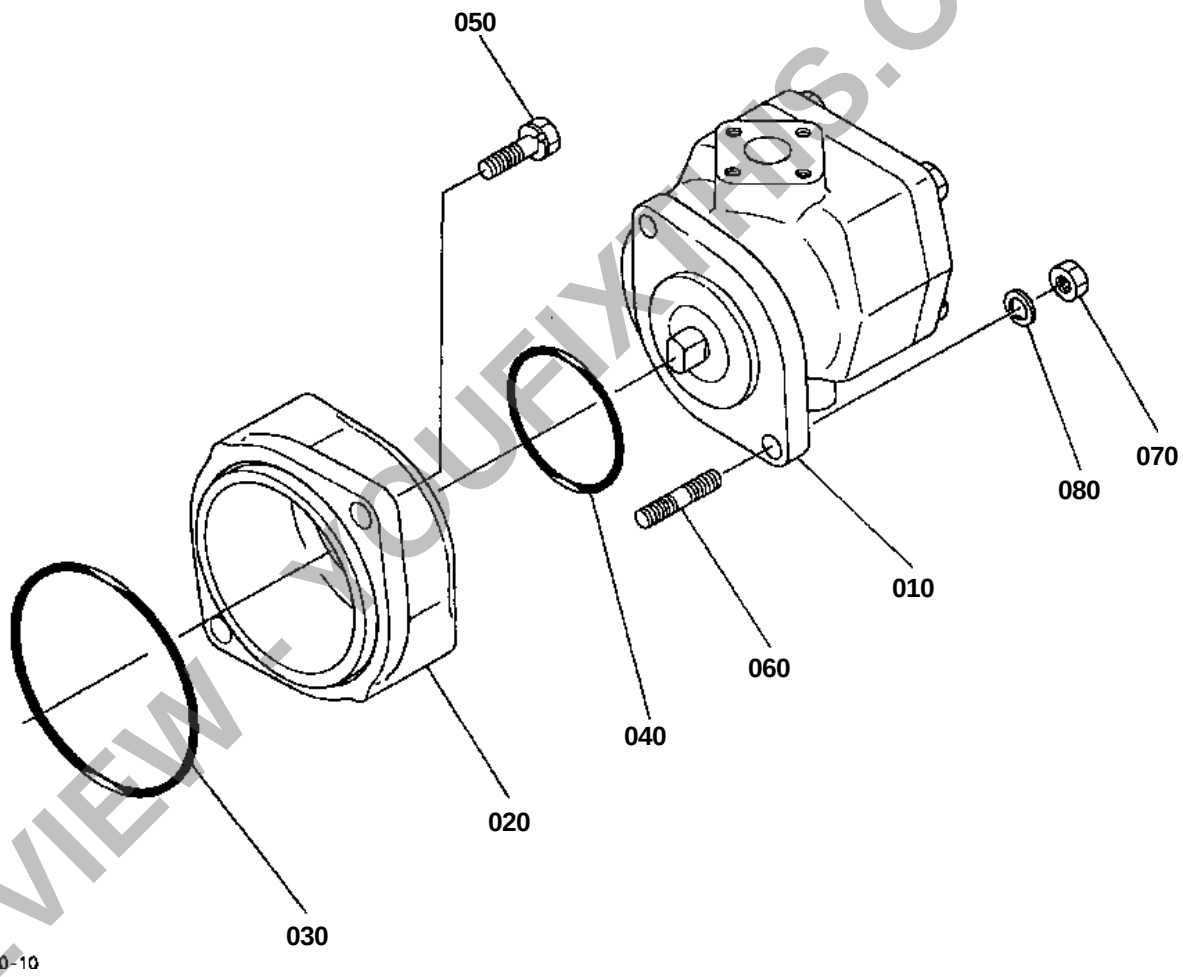

PREVIEW - YOUFIXTHIS.COM

Download full manual at youfixthis.com

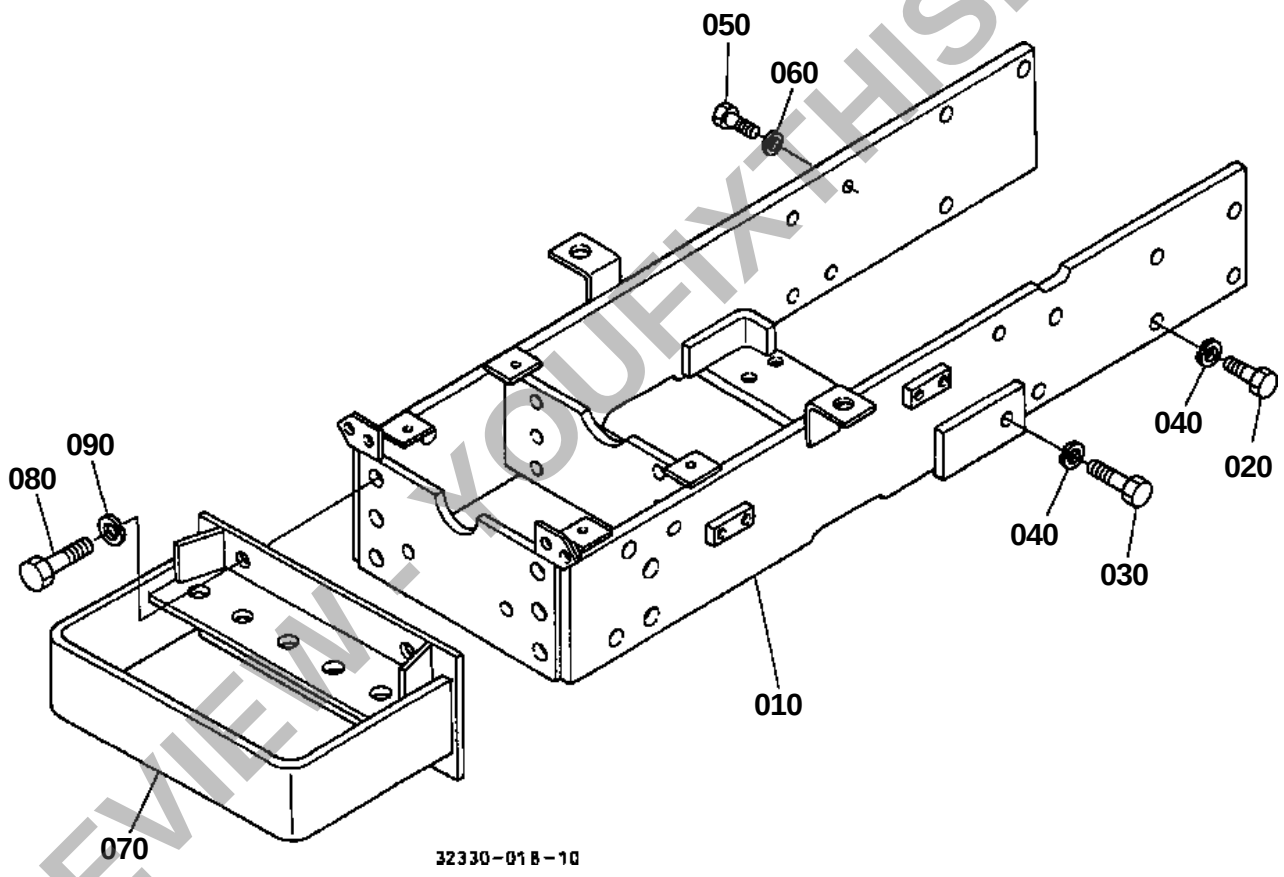

PREVIEW - YOUFIXTHIS.COM

Download full manual at youfixthis.com

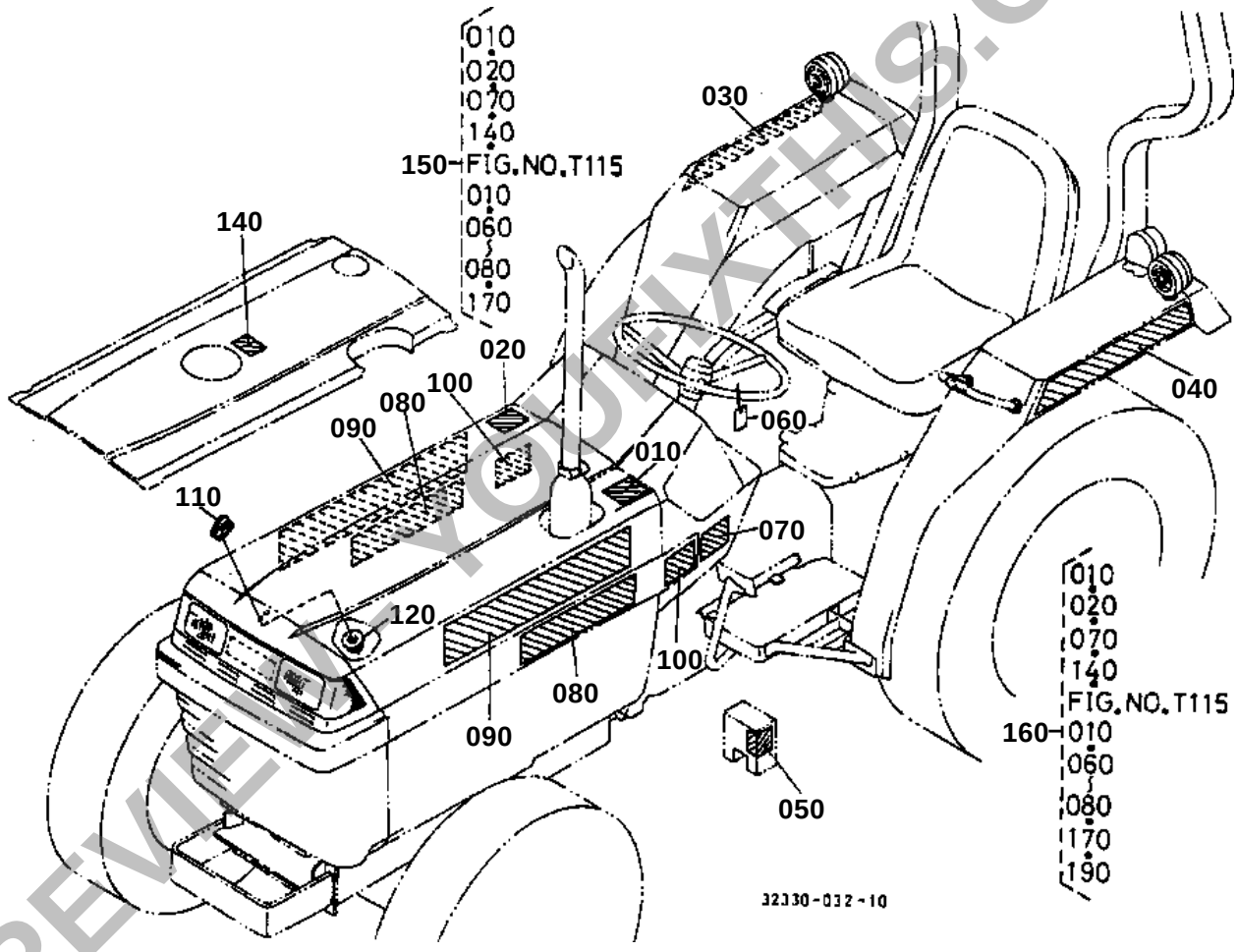

PREVIEW - YOUFIXTHIS.COM

Download full manual at youfixthis.com

Item	Part No.	Description	Book
TRANSMISSION	02T052	REVERSE SHAFT	100K0362
SPEED CHANGE LEVER	02T053	MAIN GEAR SHIFT LEVER	100K0362
	02T054	PTO GEAR SHIFT LEVER	100K0362
	02T055	MAIN GEAR SHIFT FORK	100K0362
	02T056	PTO GEAR SHIFT FORK	100K0362
	02T057	RANGE GEAR SHIFT FORK AND LEVER	100K0362
REAR AXLE/REAR WHEEL	02T058	SPIRAL BEVEL PINION	100K0362
	02T059	REAR DIFFERENTIAL	100K0362
	02T060	DIFFERENTIAL LOCK PEDAL	100K0362
	02T061	REAR AXLE	100K0362
	02T06201	REAR WHEEL (9.5-24)	100K0362
	02T06202	REAR WHEEL (11.2-24)	100K0362
	02T06203	REAR WHEEL (13.6-16)	100K0362
	02T06204	REAR WHEEL (355/80-D20)	100K0362
BRAKE	02T06301	BRAKE	100K0362
	02T064	BRAKE PEDAL	100K0362
	02T065	PARKING BRAKE LEVER	100K0362
FRONT AXLE/FRONT WHEEL/CHASSIS	02T066	FRONT AXLE	100K0362
	02T067	KNUCKLE SHAFT	100K0362
	02T06801	FRONT WHEEL (4.00-15)	100K0362
	02T06802	FRONT WHEEL (5.00-15)	100K0362
	02T06803	FRONT WHEEL (23X8.50-12)	100K0362
	02T06804	FRONT WHEEL (25X8.50-14)	100K0362
	02T069	FRONT AXLE FRAME	100K0362
STEERING	02T080	STEERING LINKAGE (DRAG LINK)	100K0362
	02T081	STEERING LINKAGE (TIE ROD)	100K0362
	02T08401	MANUAL STEERING AND HANDLE (MS)	100K0362
	02T08501	MANUAL STEERING [COMPONENT PARTS]	100K0362
HYDRAULIC SYSTEM	02T08601	HYDRAULIC PUMP	100K0362
	02T08701	HYDRAULIC PUMP [COMPONENT PARTS]	100K0362
	02T08801	HYDRAULIC OIL LINE	100K0362
	02T090	CONTROL VALVE	100K0362
	02T09101	CONTROL VALVE (POSITION CONTROL) [COMPONENT PARTS]	100K0362
	02T09102	CONTROL VALVE (DRAFT) [OPTION] [COMPONENT PARTS]	100K0362
	02T092	DRAFT CONTROL VALVE [OPTION]	100K0362
	02T093	DRAFT CONTROL VALVE [OPTION] [COMPONENT PARTS]	100K0362
	02T094	HYDRAULIC CYLINDER	100K0362
	02T095	CYLINDER FRONT COVER	100K0362
	02T096	LIFT ARM	100K0362
	02T097	FEED BACK LEVER	100K0362
	02T098	POSITION CONTROL LEVER	100K0362
	02T099	3-POINT LINKAGE 1 (LOWER LINK/TOP LINK)	100K0362
	02T100	3-POINT LINKAGE 2 (LIFT ROD)	100K0362
	02T101	TOP LINK BRACKET/LOWER LINK HOLDER	100K0362
	02T102	TOP LINK BRACKET (WITH DRAFT CONTROL) [OPTION]	100K0362
HITCH/DRAWBAR	02T103	DRAWBAR/HITCH	100K0362
	02T104	PTO SHAFT PROTECTOR	100K0362

PREVIEW - YOUFIXTHIS.COM

Download full manual at youfixthis.com

↔ Interchangeable; ≠ not interchangeable; ← new for old; → old for new

REF.No	Part No.	Description	Q'ty	S.No.	I/C	REMARKS	Weight (kgf)	Weight (lb)
010	32460-11600	ASSY FRONT WHEEL	2				0	0
020	35110-11610	ASSY TIRE	2				5	11
030	31220-11620	TIRE	2				3.5	7.7
040	31220-11630	TUBE	2				0.64	1.408
050	32150-27740	CORE VALVE	2				0.003	0.0066
060	38240-11690	CAP VALVE	2				0.001	0.0022
070	32460-11640	ASSY WHEEL	2				7.2	15.84
080	32460-11670	LABEL TIRE	4				0.001	0.0022
090	04512-60140	WASHER SPRING	12				0.008	0.0176
100	01517-51428	STUD	12				0.05	0.11
110	35340-11390	NUT	12				0.03	0.066

PREVIEW - YOUFIXTHIS.COM

Download full manual at youfixthis.com

PREVIEW ONLY

You're viewing 11 of 228 pages

The full manual includes:

- All 228 pages, complete
- Searchable PDF (find any keyword)
- No watermarks
- Instant download
- Print-ready quality

GET FULL MANUAL NOW

Kubota L2500F Parts Catalog

Scan or click anywhere
youfixthis.com

Click anywhere on this page to get the full manual