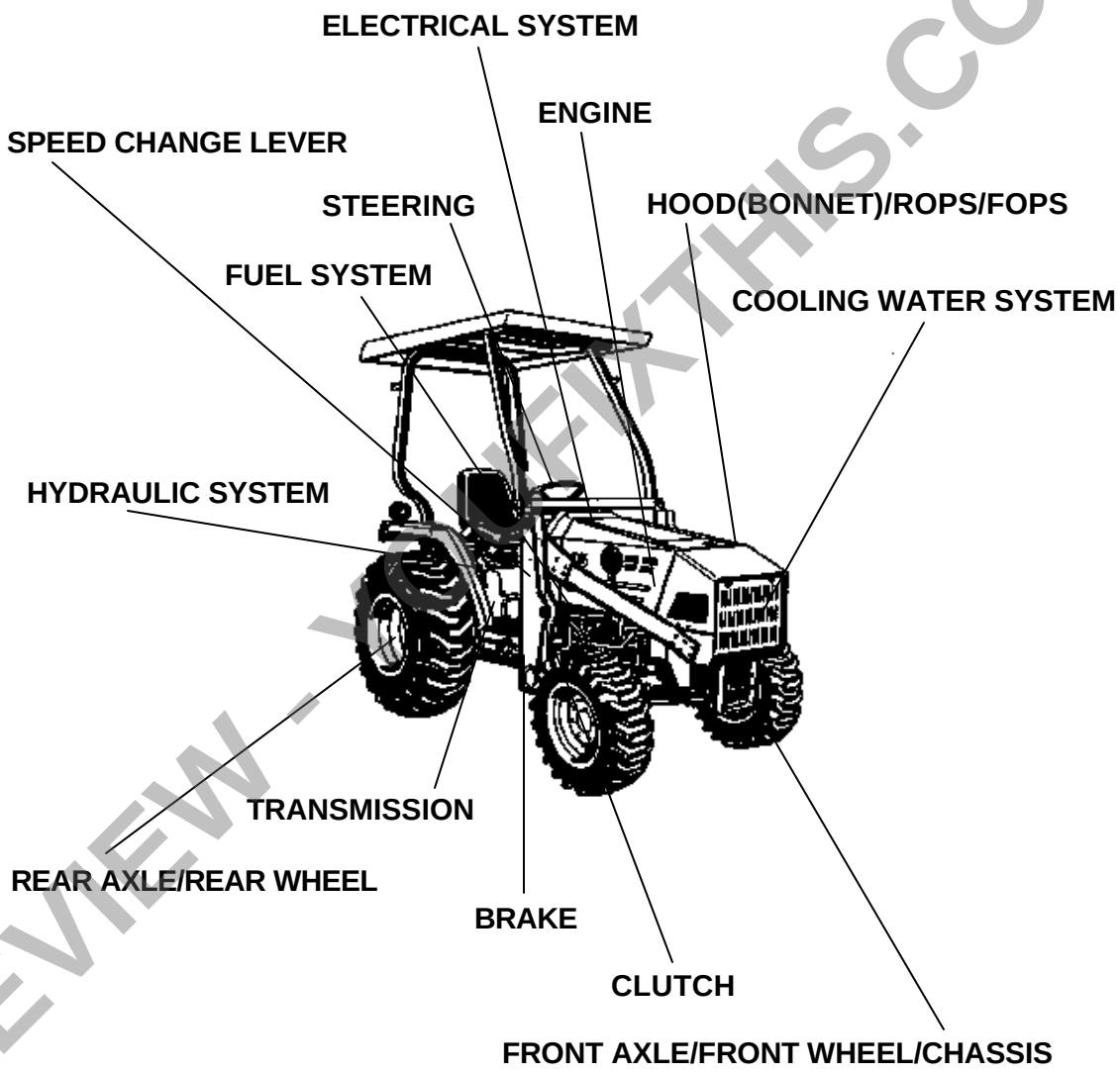

LABELS

ACCESSORIES

PREVIEW - YOUFIXTHIS.COM

Download full manual at youfixthis.com

Item	Part No.	Description	Book
ENGINE	01T001	CRANKCASE	100K0361
	01T002	OIL PAN	100K0361
	01T003	PISTON AND CRANKSHAFT	100K0361
	01T004	MAIN BEARING CASE [OLD TYPE]	100K0361
	01T00401	MAIN BEARING CASE [NEW TYPE]	100K0361
	01T005	FLYWHEEL	100K0361
	01T006	CYLINDER HEAD	100K0361
	01T007	VALVE AND ROCKER ARM [OLD TYPE]	100K0361
	01T00701	VALVE AND ROCKER ARM [NEW TYPE]	100K0361
	01T008	NOZZLE HOLDER AND GLOW PLUG	100K0361
	01T009	NOZZLE HOLDER [COMPONENT PARTS]	100K0361
	01T010	CYLINDER HEAD COVER [OLD TYPE]	100K0361
	01T01001	CYLINDER HEAD COVER [NEW TYPE]	100K0361
	01T011	INLET MANIFOLD	100K0361
	02T012	AIR CLEANER	100K0361
	02T013	EXHAUST MANIFOLD AND MUFFLER	100K0361
	01T014	CAMSHAFT	100K0361
	01T015	GEAR CASE	100K0361
	01T016	WATER PUMP	100K0361
	01T017	WATER FLANGE AND THERMOSTAT	100K0361
	01T018	FUEL CAMSHAFT	100K0361
	01T019	INJECTION PUMP	100K0361
	01T021	ENGINE STOP LEVER	100K0361
	01T022	SPEED CONTROL PLATE	100K0361
	01T023	GOVERNOR	100K0361
	01T024	UPPER GASKET KIT	100K0361
	01T025	LOWER GASKET KIT	100K0361
	02T026	STOP SELENOID AND ENGINE STOP WIRE	100K0361
	02T027	ACCELERATOR LEVER	100K0361
	02T028	ACCELERATOR LINKAGE	100K0361
	02T029	ACCELERATOR ROD	100K0361
FUEL SYSTEM	02T030	FUEL TANK	100K0361
	02T031	FUEL FILTER AND FUEL PIPE	100K0361
	02T032	FUEL FILTER [COMPONENT PARTS]	100K0361
COOLING WATER SYSTEM	02T033	FAN	100K0361
	02T034	WATER PIPE	100K0361
	02T035	RADIATOR	100K0361
	02T036	RESERVE TANK	100K0361
ELECTRICAL SYSTEM	02T037	ALTERNATOR	100K0361
	02T038	ALTERNATOR [COMPONENT PARTS]	100K0361
	02T039	STARTER	100K0361
	02T040	STARTER [COMPONENT PARTS]	100K0361
	02T041	BATTERY	100K0361
	02T042	SWITCH	100K0361
	02T043	PANEL BOARD	100K0361
	02T044	PANEL BOARD [COMPONENT PARTS]	100K0361
	02T045	LIGHT [OLD TYPE]	100K0361
	02T04501	LIGHT [NEW TYPE]	100K0361
	02T046	ELECTRICAL WIRING [OLD TYPE]	100K0361
	02T04601	ELECTRICAL WIRING [NEW TYPE]	100K0361
CLUTCH	02T047	CLUTCH	100K0361
	02T048	CLUTCH LEVER	100K0361

PREVIEW - YOUFIXTHIS.COM

Download full manual at youfixthis.com

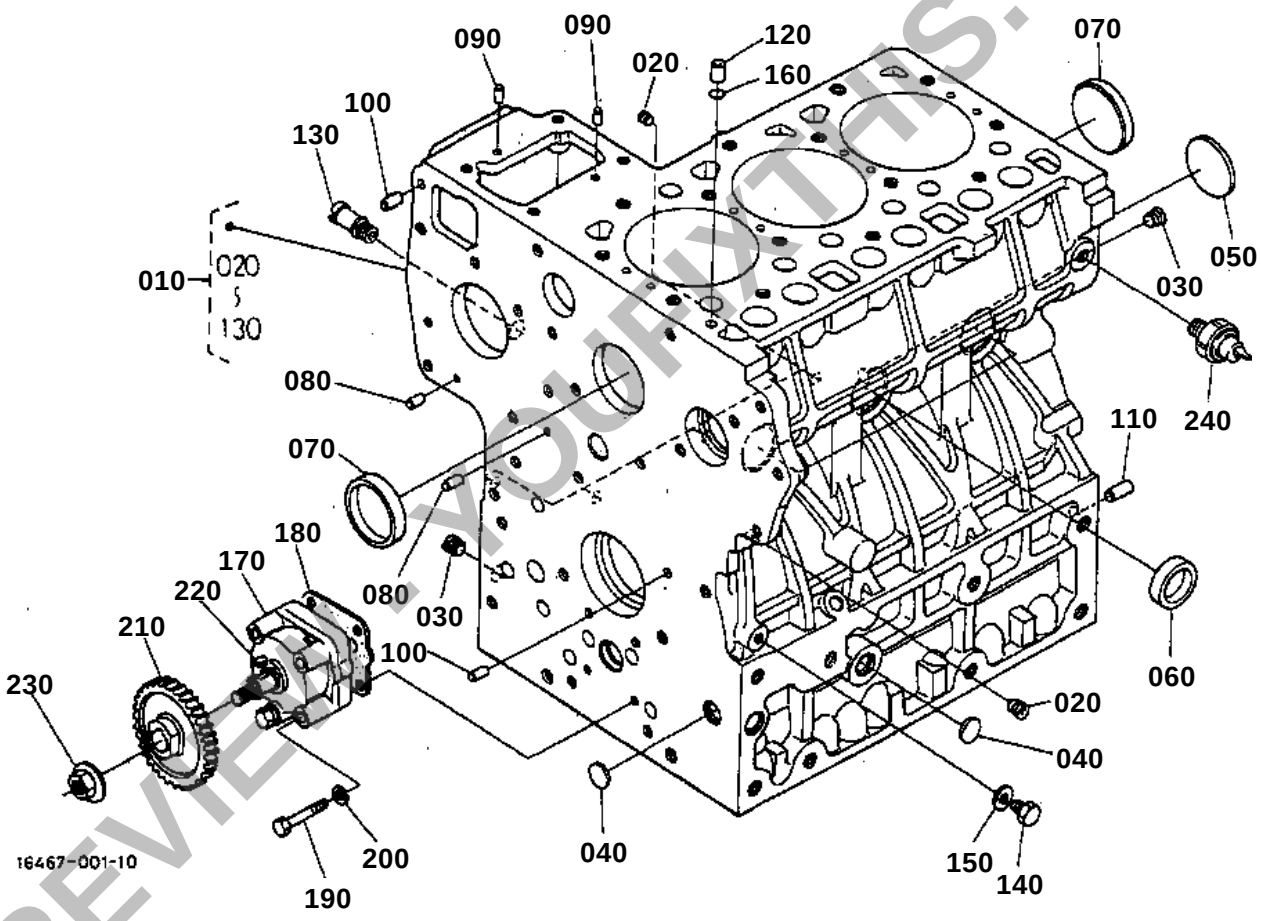

PREVIEW - YOUFIXTHIS.COM

Download full manual at youfixthis.com

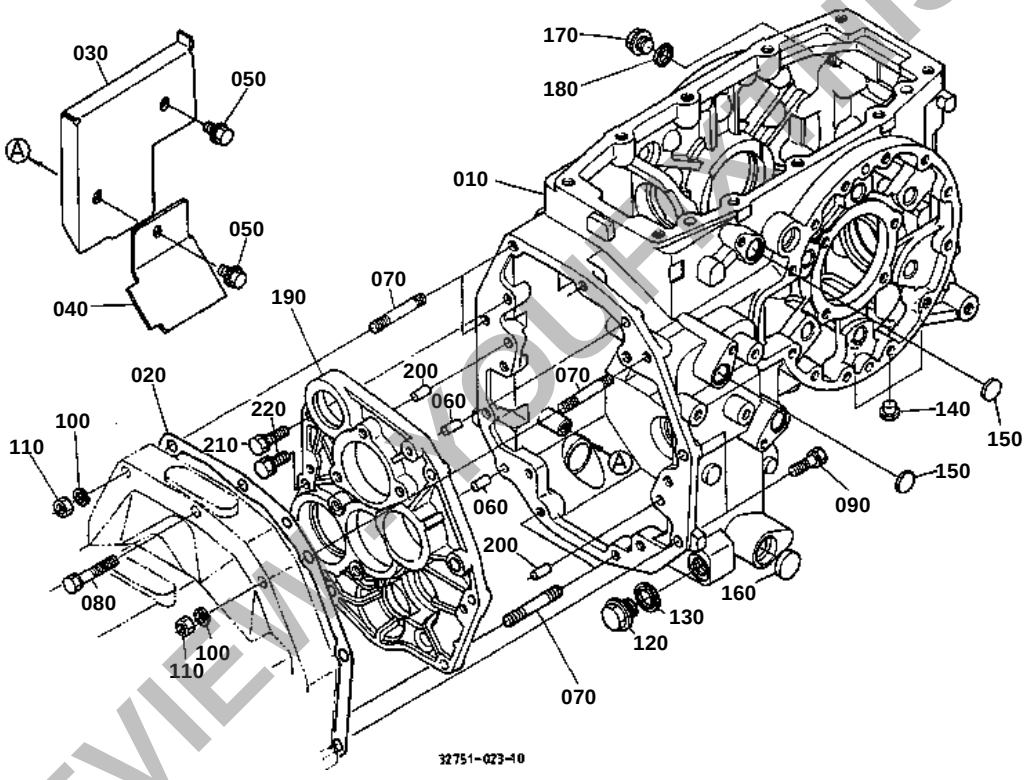

PREVIEW ONLY - YOUFIXTHIS.COM

Download full manual at youfixthis.com

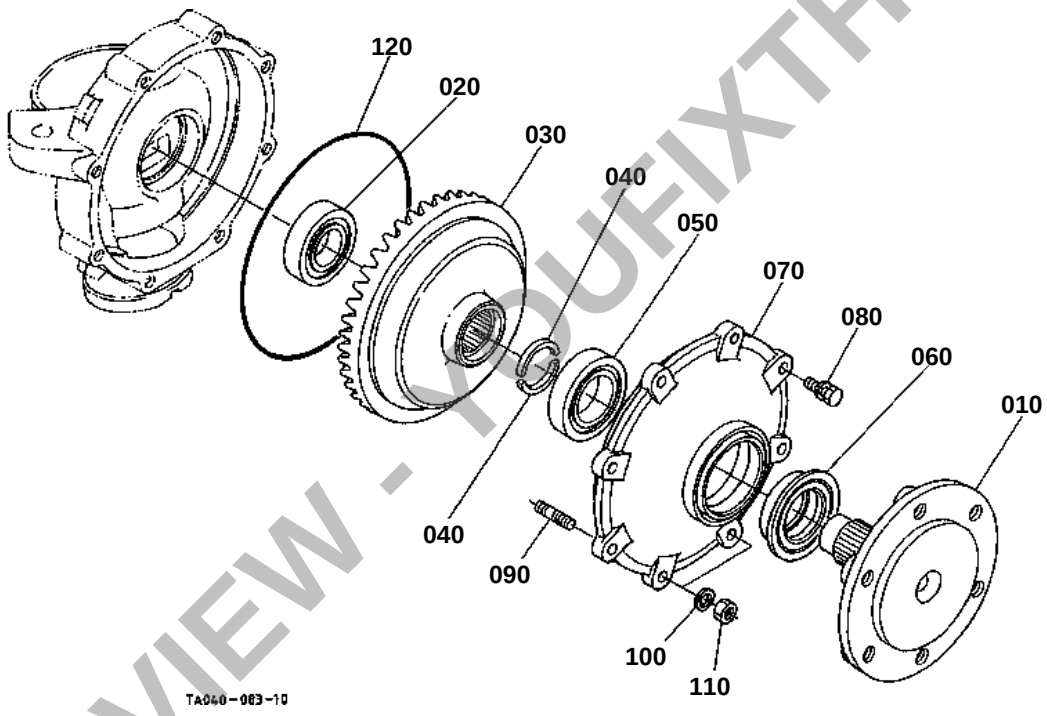

PREVIEW - YOUFIXTHIS.COM

Download full manual at youfixthis.com

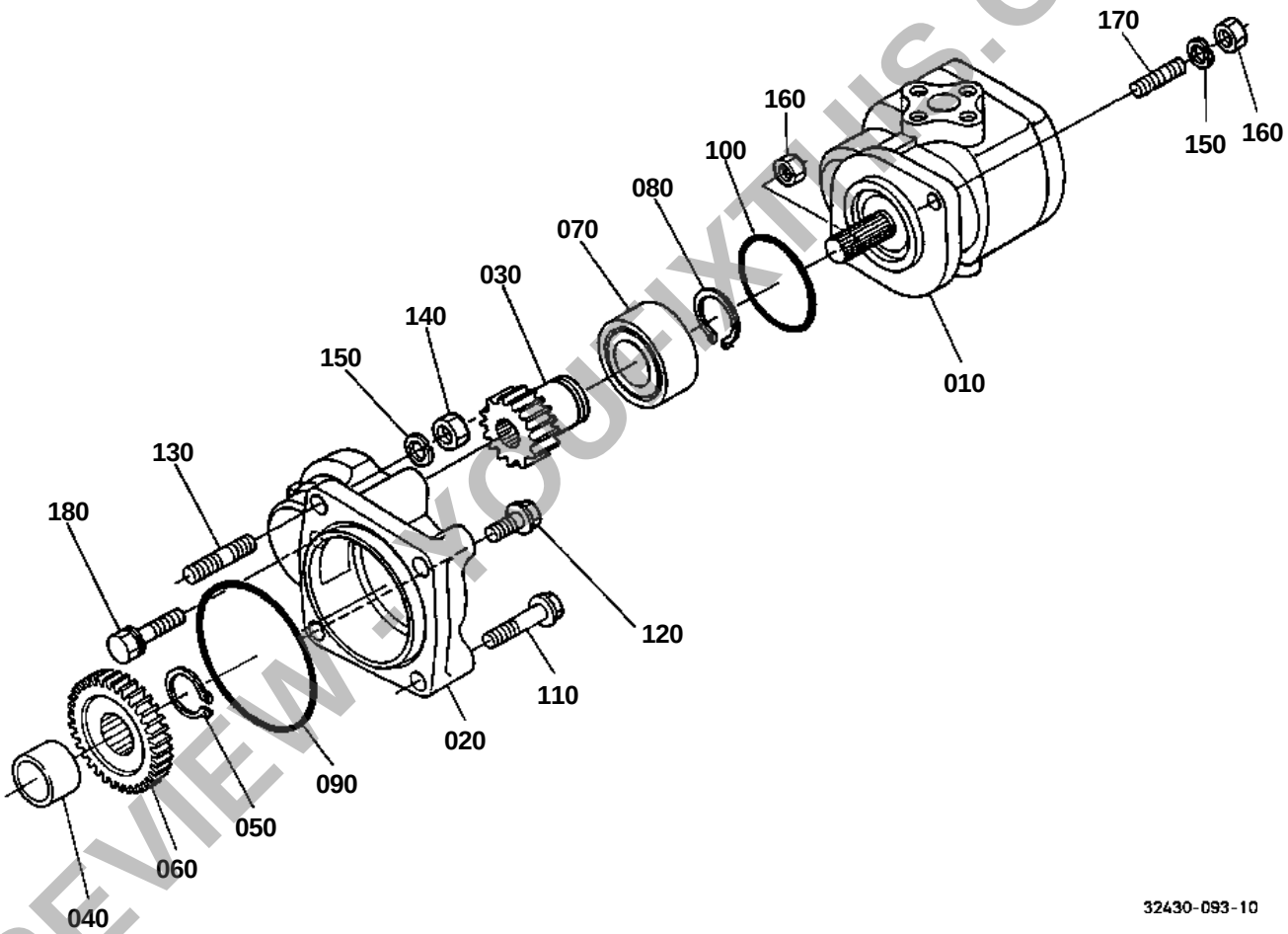

PREVIEW - YOUFIXTHIS.COM

Download full manual at youfixthis.com

Item	Part No.	Description	Book
CLUTCH	02T049	CLUTCH PEDAL	100K0361
	02T050	CLUTCH HOUSING	100K0361
	02T051	MID CASE	100K0361
TRANSMISSION	02T052	TRANSMISSION CASE	100K0361
	02T053	MAIN SHAFT	100K0361
	02T054	COUNTERSHAFT	100K0361
	02T055	HYDRAULIC CLUTCH	100K0361
	02T056	SHUTTLE SHAFT	100K0361
	02T057	RANGE GEAR SHAFT	100K0361
	02T058	PTO COUNTERSHAFT AND ONE WAY CLUTCH	100K0361
	02T059	PTO SHAFT	100K0361
SPEED CHANGE LEVER	02T060	MAIN GEAR SHIFT LEVER	100K0361
	02T06001	GST SHIFT COVER [OPTION]	100K0361
	02T061	MAIN GEAR SHIFT FORK	100K0361
	02T062	SHUTTLE GEAR SHIFT LEVER	100K0361
	02T063	SHUTTLE GEAR SHIFT FORK	100K0361
	02T064	RANGE GEAR SHIFT FORK	100K0361
	02T065	PTO GEAR SHIFT LEVER	100K0361
	02T066	PTO GEAR SHIFT FORK	100K0361
	02T067	SPIRAL BEVEL PINION	100K0361
	02T068	REAR DIFFERENTIAL	100K0361
	02T069	DEFFERENTIAL LOCK SHIFT FORK	100K0361
REAR AXLE/REAR WHEEL	02T070	REAR AXLE	100K0361
	02T071	REAR WHEEL (15-19.5)	100K0361
BRAKE	02T072	BRAKE	100K0361
	02T073	BRAKE PEDAL	100K0361
	02T074	BRAKE ROD	100K0361
FRONT AXLE/FRONT WHEEL/CHASSIS	02T075	FRONT AXLE	100K0361
	02T076	FRONT AXLE CASE	100K0361
	02T077	DIFFERENTIAL GEAR SHAFT	100K0361
	02T078	FRONT DIFFERENTIAL CASE	100K0361
	02T079	FRONT DIFFERENTIAL	100K0361
	02T080	PROPELLER SHAFT	100K0361
	02T081	FRONT WHEEL DRIVE SHAFT	100K0361
	02T082	FRONT WHEEL DRIVE LEVER	100K0361
	02T083	FRONT WHEEL (27X10.5-15)	100K0361
	02T084	FRONT AXLE FRAME	100K0361
STEERING	02T085	STEERING LINKAGE	100K0361
	02T086	STEERING CYLINDER	100K0361
	02T087	STEERING CYLINDER [COMPONENT PARTS]	100K0361
	02T088	STEERING CONTROLLER	100K0361
	02T089	STEERING HANDLE	100K0361
HYDRAULIC SYSTEM	02T090	HYDRAULIC OIL LINE (PS)	100K0361
	02T091	GST VALVE	100K0361
	02T09101	GST VALVE [GST TYPE] [COMPONENT PARTS]	100K0361
	02T09102	GST VALVE [GST TYPE] [COMPONENT PARTS]	100K0361
	02T09103	GST VALVE [GST TYPE] [COMPONENT PARTS]	100K0361
	02T092	REGULATOR VALVE	100K0361

PREVIEW - YOUFIXTHIS.COM

Download full manual at youfixthis.com

↔ Interchangeable; ≠ not interchangeable; ← new for old; → old for new

REF.No	Part No.	Description	Q'ty	S.No.	I/C	REMARKS	Weight (kgf)	Weight (lb)
010	16484-13110	VALVE INLET	3				0.06	0.132
020	16484-13120	VALVE EXHAUST	3				0.13	0.286
030	15221-13240	SPRING VALVE	6				0.036	0.0792
040	15221-13330	RETAINER VALVE SP.	6				0.03	0.066
050	15221-13980	COLLET VALVE SPRING	6			SET	0.002	0.0044
060	15221-13153	SEAL VALVE STEM	6				0.001	0.0022
070	15221-13280	CAP VALVE	6				0.006	0.0132
080	1A021-14260	SHAFT ROCKER ARM	1				0.225	0.495
090	15221-14350	BRACKET.ROCKER ARM	3				0.044	0.0968
100	15221-14310	SPRING ROCKER ARM	2				0.005	0.011
110	01754-50855	BOLT FLANGE	3				0.02	0.044
120	05411-00528	PIN SPRING	1				0.003	0.0066
130	15221-14430	WASHER R-ARM.SHAFT	2				0.002	0.0044
140	04013-60080	WASHER PLAIN	2				0.002	0.0044
150	04512-60080	WASHER SPRING	2				0.002	0.0044
160	01153-50812	BOLT	2				0.008	0.0176
170	15621-14030	ASSY ROCKER ARM	6				0.1	0.22
180	15521-14230	SCREW ADJUSTING	6				0.009	0.0198
190	15021-14240	NUT	6				0.003	0.0066

PREVIEW - YOUFIXTHIS.COM
Download full manual at youfixthis.com

↔ Interchangeable; ≠ not interchangeable; ← new for old; → old for new

REF.No	Part No.	Description	Q'ty	S.No.	I/C	REMARKS	Weight (kgf)	Weight (lb)
010	16412-73030	ASSY PUMP WATER	1	<=1W0387			0	0
010	1A021-73030	ASSY PUMP WATER	1	>=1Y0001	¬		1	2.2
020	17331-73410	BODY WATER PUMP	1				0.51	1.122
030	15521-73550	BEARING	1				0.235	0.517
040	15521-73510	IMPELLER WATER PUMP	1	<=4964			0.22	0.484
040	16661-73510	IMPELLER	1	>=4965	1		0	0
040	1A021-73510	IMPELLER WATER PUMP	1	>=1Y0001	¬		0.065	0.143
050	19202-73050	ASSY SEAL MECHANICAL	1	<=4964			0.02	0.044
050	16661-73050	ASSY SEAL MECHANICAL	1	>=4965	1		0.025	0.055
060	15521-73520	FLANGE WATER PUMP	1				0.25	0.55
070	17326-73430	GASKET WATER PUMP	1				0	0
070	1A021-73430	GASKET WATER PUMP	1		«		0.007	0.0154
080	01123-50828	BOLT	3				0.014	0.0308
090	15521-91510	STUD	1	<=3U0554			0.012	0.0264
090	01518-50822	STUD	1	>=3W0001	¬		0.012	0.0264
100	04512-60080	WASHER SPRING	1				0.002	0.0044
110	02156-50080	NUT	1				0.004	0.0088
120	15221-88210	STUD	1				0.005	0.011
130	01023-50618	BOLT	8				0.006	0.0132
140	02056-50060	NUT	1				0.002	0.0044
150	04512-60060	WASHER SPRING	1				0.001	0.0022
160	07916-27482	KIT REPAIR W/PUMP	1				0.71	1.562

PREVIEW - YOUFIXTHIS.COM

Download full manual at youfixthis.com

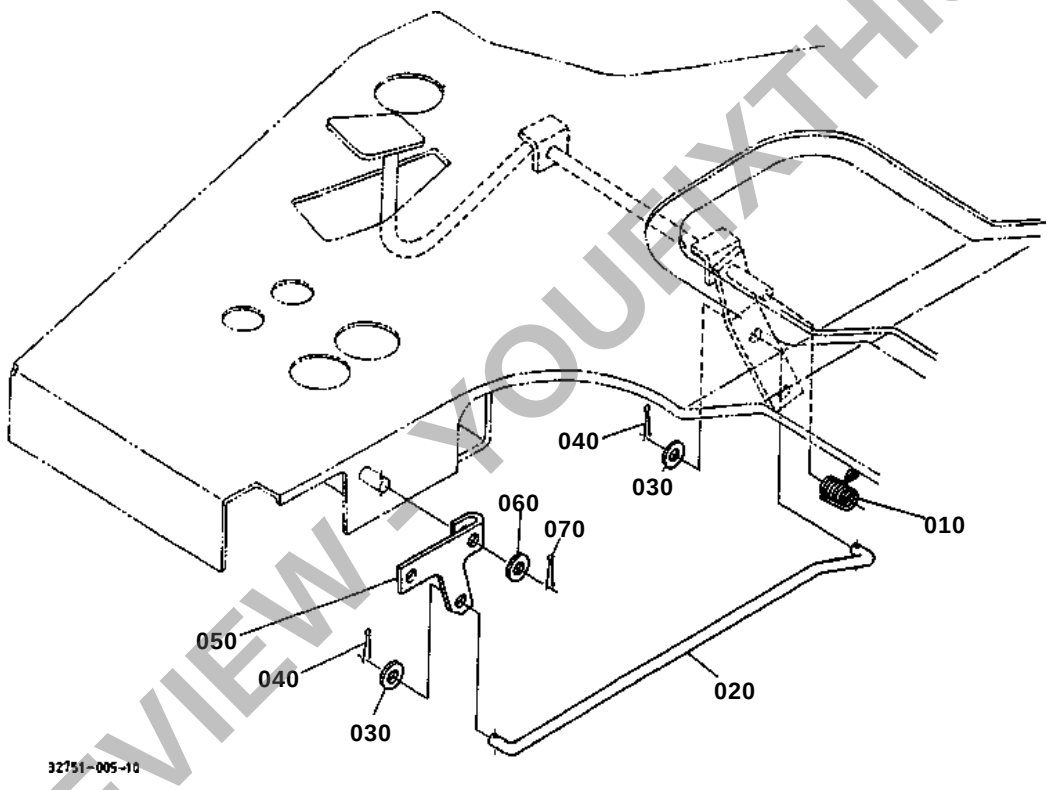

PREVIEW - YOUFIXTHIS.COM

Download full manual at youfixthis.com

↔ Interchangeable; ≠ not interchangeable; ← new for old; → old for new

REF.No	Part No.	Description	Q'ty	S.No.	I/C	REMARKS	Weight (kgf)	Weight (lb)
010	34070-16800	ASSY STARTER	1				3.4	7.48
020	01517-51028	STUD	1				0.022	0.0484
030	02176-50100	NUT	1				0.005	0.011
040	01133-51030	BOLT	1				0.025	0.055
050	04512-50100	WASHER SPRING	1				0	0

PREVIEW - YOUFIXTHIS.COM

Download full manual at youfixthis.com

080 T0070-4446-0

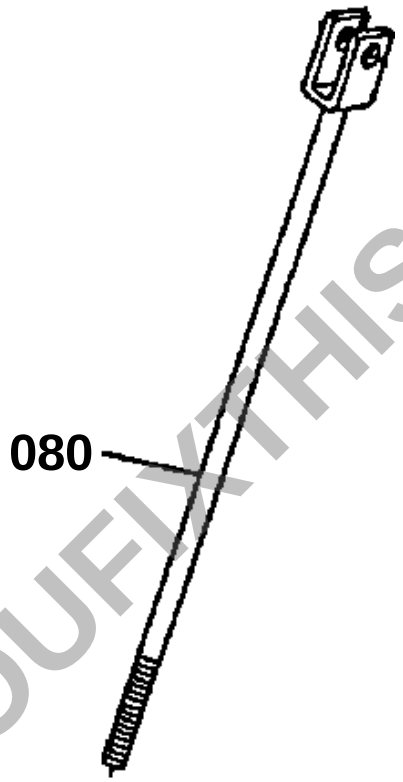

PREVIEW - YOUFIXTHIS.COM

32751-821-10

Download full manual at youfixthis.com

↔ Interchangeable; ≠ not interchangeable; ← new for old; → old for new

REF.No	Part No.	Description	Q'ty	S.No.	I/C	REMARKS	Weight (kgf)	Weight (lb)
010	T0043-47100	GUIDE SHIFT	1				0.96	2.112
020	01754-50812	BOLT FLANGE	4				0.01	0.022
030	34076-64800	ASSY CABLE SHIFT	1	<=63047			0	0
030	34076-64803	ASSY CABLE SHIFT	1	>=63048	¬		1.61	3.542
040	32425-72690	GASKET	1				0.002	0.0044
050	05012-00608	PIN STRAIGHT	2				0.002	0.0044
060	04013-50060	WASHER PLAIN	3				0	0
070	01023-50628	BOLT	3				0.015	0.033
080	34076-64560	COLLAR	2				0.03	0.066
090	01123-50890	BOLT	2				0.04	0.088
100	02114-50080	NUT	2				0.005	0.011
110	34076-64570	STAY	1				0.07	0.154
115	04015-50080	WASHER PLAIN	2				0	0
120	01123-50835	BOLT	1				0.02	0.044
130	01123-50816	BOLT	1				0	0
140	34076-64550	ASSY LEVER SHIFT	1				0.28	0.616
150	34076-64540	BUSH	2				0.005	0.011
160	05712-00520	KEY FEATHER	1				0.004	0.0088
170	01123-50816	BOLT	1				0	0
180	04015-50080	WASHER PLAIN	1				0	0
190	32751-64510	LEVER SHIFT	1				0.305	0.671
200	31391-24510	PIPE LEVER	1				0.005	0.011
210	34076-64530	SPRING	1				0.01	0.022
220	05411-00525	PIN SPRING	2				0.002	0.0044
230	05411-00320	PIN SPRING	1				0.001	0.0022
240	TA040-69820	GRIP LEVER	1				0.117	0.2574

PREVIEW - YOUFIXTHIS.COM

Download full manual at youfixthis.com

↔ Interchangeable; ≠ not interchangeable; ← new for old; → old for new

REF.No	Part No.	Description	Q'ty	S.No.	I/C	REMARKS	Weight (kgf)	Weight (lb)
010	TA020-26710	SHAFT DIFF.GEAR RH	1			11T	1.92	4.224
020	TA020-26720	SHAFT DIFF.GEAR LH	1			11T	2.2	4.84
030	08101-06309	BEARING BALL	2				0.82	1.804
040	32751-28650	CIR CLIP INTERNAL	2				0.04	0.088
050	04612-00450	CIRCLIP EXTERNAL	2				0.007	0.0154
060	99999-99999	BLANK	0				0	0
070	32420-27113	AXLE REAR	2				10.05	22.11
080	32420-27143	SPACER	2				1.415	3.113
090	08101-06210	BEARING BALL	2				0.45	0.99
100	04611-00900	CIR CLIP INTERNAL	2				0.037	0.0814
110	31351-27560	SEAL OIL	2				0	0
120	36540-41130	BEARING BALL	2	<=60084			0.34	0.748
120	32430-25000	BEARING BALL	2	>=60085	¬		0	0
120	TA140-25000	BEARING BALL	2	>=64670	¬		0.342	0.7524
130	70650-11380	NUT	2				0.11	0.242
140	31341-26833	GEAR	2			53T	4.74	10.428
150	32751-27330	CASE REAR AXLE LH	1	<=60832			0	0
150	32751-27332	CASE REAR AXLE LH	1	>=60833	¬		15.4	33.88
160	32751-27370	PIN STRAIGHT	4				0.006	0.0132
170	08101-06307	BEARING BALL	2				0.455	1.001
180	01133-51035	BOLT	16				0.03	0.066
190	01517-51035	STUD	4				0.028	0.0616
200	02176-50100	NUT	4				0.005	0.011
210	04512-60100	WASHER SPRING	4				0.002	0.0044
220	31220-14290	PLUG	16				0.002	0.0044
230	32751-27340	CASE REAR AXLE RH	1	<=60832			0	0
230	32751-27342	CASE REAR AXLE RH	1	>=60833	¬		15.4	33.88

PREVIEW - YOUFIXTHIS.COM

Download full manual at youfixthis.com

↔ Interchangeable; ≠ not interchangeable; ← new for old; → old for new

REF.No	Part No.	Description	Q'ty	S.No.	I/C	REMARKS	Weight (kgf)	Weight (lb)
010	32751-15150	SHAFT 4WD SHIFT GEAR	1				0.94	2.068
020	37410-57190	BEARING BALL	1				0.14	0.308
030	32751-21310	BEARING BALL	1				0.13	0.286
040	32751-15190	COLLAR	1				0.027	0.0594
050	34070-15160	SPRING	1				0.005	0.011
060	07715-00401	BALL	2				0.001	0.0022
070	34070-15170	GEAR 4WD SHIFT	1	<=50868		17T	0	0
070	32751-15170	GEAR 4WD SHIFT	1	>=60001	¬	17T	0.47	1.034
080	32751-15210	SHAFT DRIVE	1	<=60189			0	0
080	32751-15212	SHAFT DRIVE	1	>=60190	¬		0.67	1.474
090	34070-22560	BEARING BALL	1				0.1	0.22
100	08101-06204	BEARING BALL	1				0.102	0.2244
110	32751-15220	GEAR 4WD	1	<=60189		20T/NOT SALE	0	0
110	32751-15222	GEAR 4WD	1	>=60190	¬	20T	0.55	1.21
120	04612-00280	CIRCLIP EXTERNAL	2				0.003	0.0066
130	04612-00320	CIRCLIP EXTERNAL	1				0.004	0.0088

PREVIEW - YOUFIXTHIS.COM

Download full manual at youfixthis.com

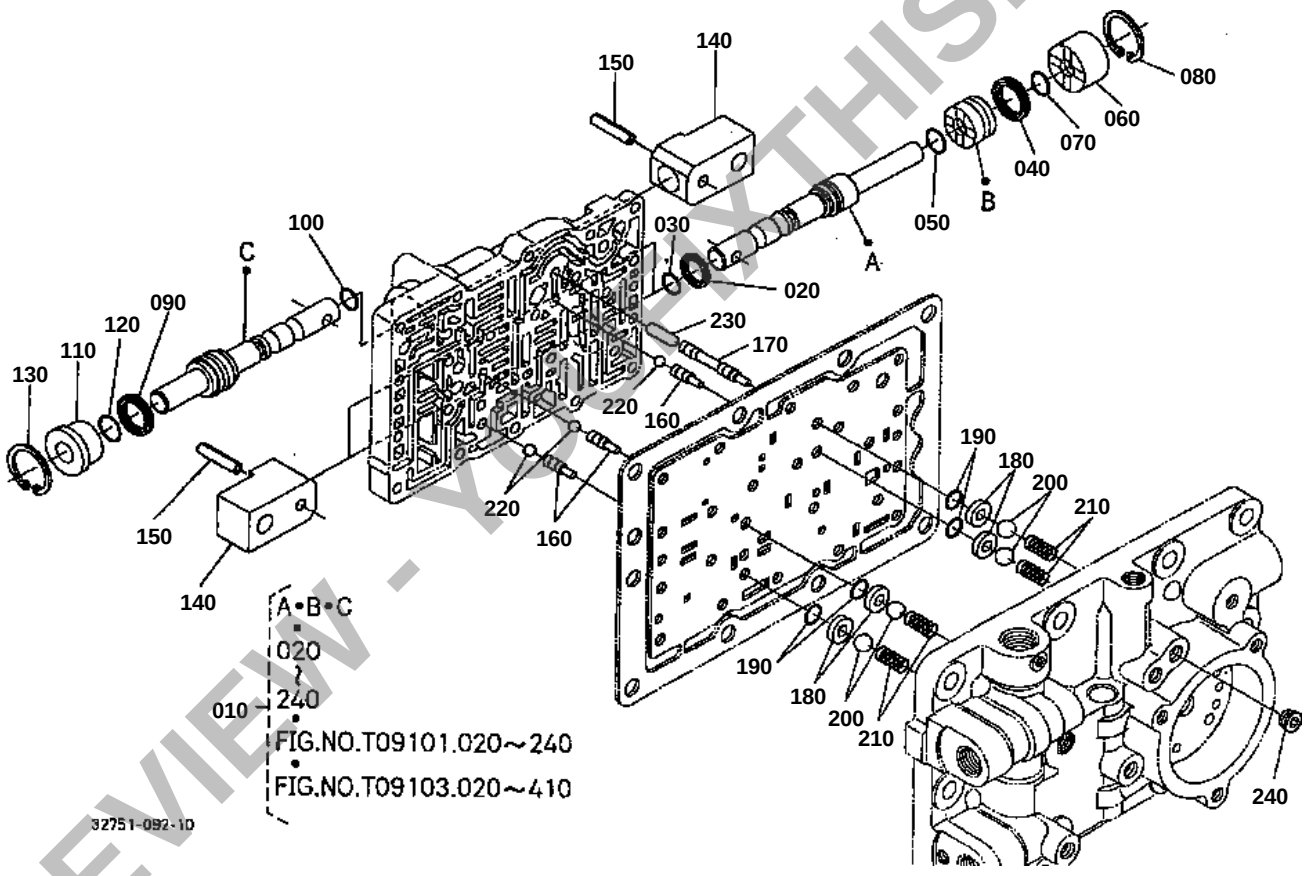

PREVIEW - YOUFIXTHIS.COM

Download full manual at youfixthis.com

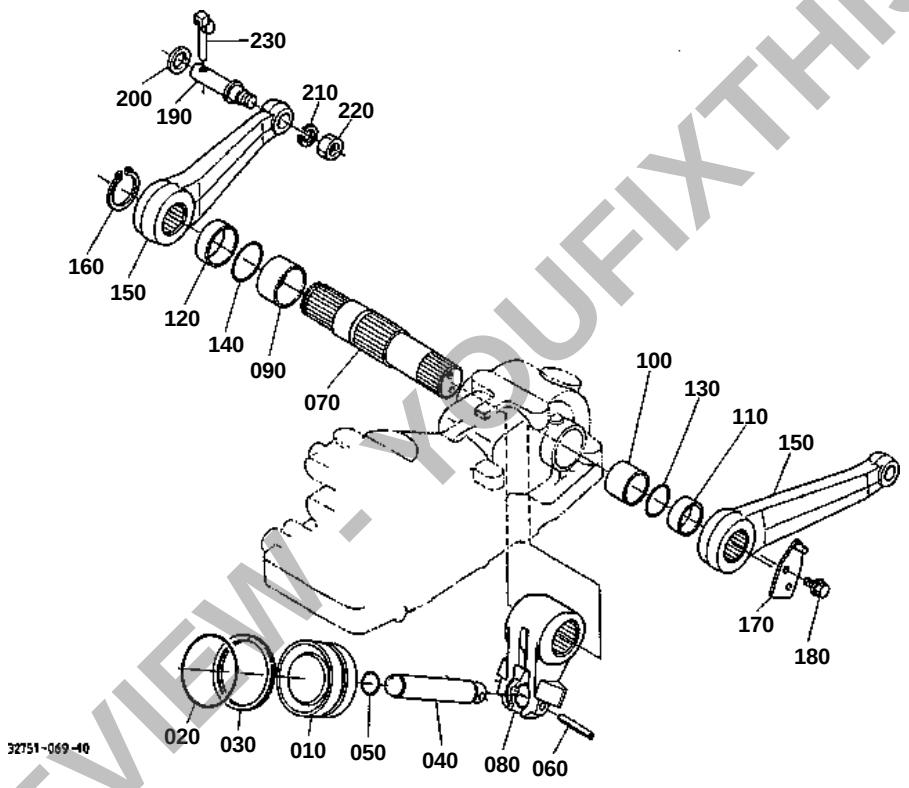

PREVIEW - YOUFIXTHIS.COM

Download full manual at youfixthis.com

070 32751-4211-0

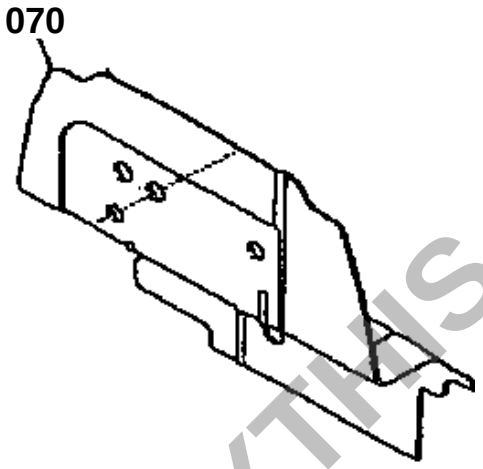

32751-818-10

PREVIEW - YOUFIXTHIS.COM

Download full manual at youfixthis.com

PREVIEW ONLY

You're viewing 18 of 317 pages

The full manual includes:

- All 317 pages, complete
- Searchable PDF (find any keyword)
- No watermarks
- Instant download
- Print-ready quality

GET FULL MANUAL NOW

Kubota L35 Parts Catalog

Scan or click anywhere
youfixthis.com

Click anywhere on this page to get the full manual