Instructions for Parts Books

The heading at the top of the page will be the same for the picture of the parts at it is for the page with the part numbers.

Definition of column headings on part number pages:

REF.No → The number refering to the part on the picture page of the parts book.

Part No. → The number assigned to this part at the time of printing the parts book.

Description → Discription of part.

Q'ty → Quanity of part used on that page.

S.No. → Serial number range of the equipment that this part will fit.
>= Your serial number should be greater than or equal to the number shown.
<= Your serial number should be lesser than or equal to the serial number shown.

I/C → Interchangeability of part shown.
←→ The part shown will work for the older and later serial number.
The part shown is not interchangable with the other serial number.
← new for old
→ old for new

Remarks → Notes about this particulart part. Sometimes this may say except [FR] or [CA]

Note about Country Codes:

The parts books we use in the United States of America may also contain information about a part that would be different in another country. It is important that you are aware of the country codes in some instances.

Symbol	Country
A	United States of America
CA	Canada
FR	France
GR	Greece
PO	Portugal
AU	Australia

If the remarks column says for example EXCEPT [FR] this part works in all countries except France.
That means it will work here in the USA.

PREVIEW - YOUFIXTHIS.COM

Download full manual at youfixthis.com

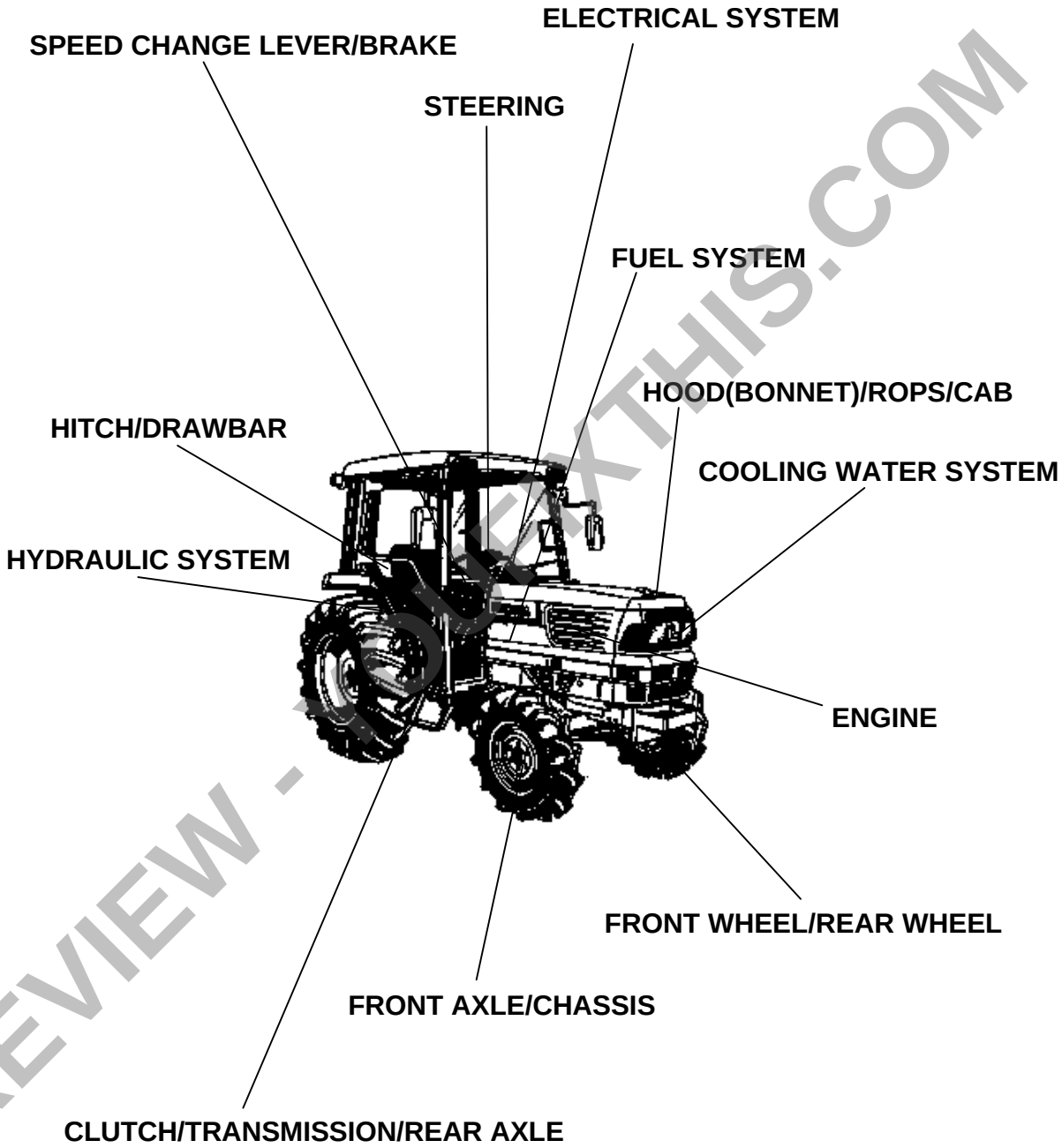

PREVIEW - YOUFIXTHIS.COM

LABELS

ACCESSORIES

OPTION

Download full manual at youfixthis.com

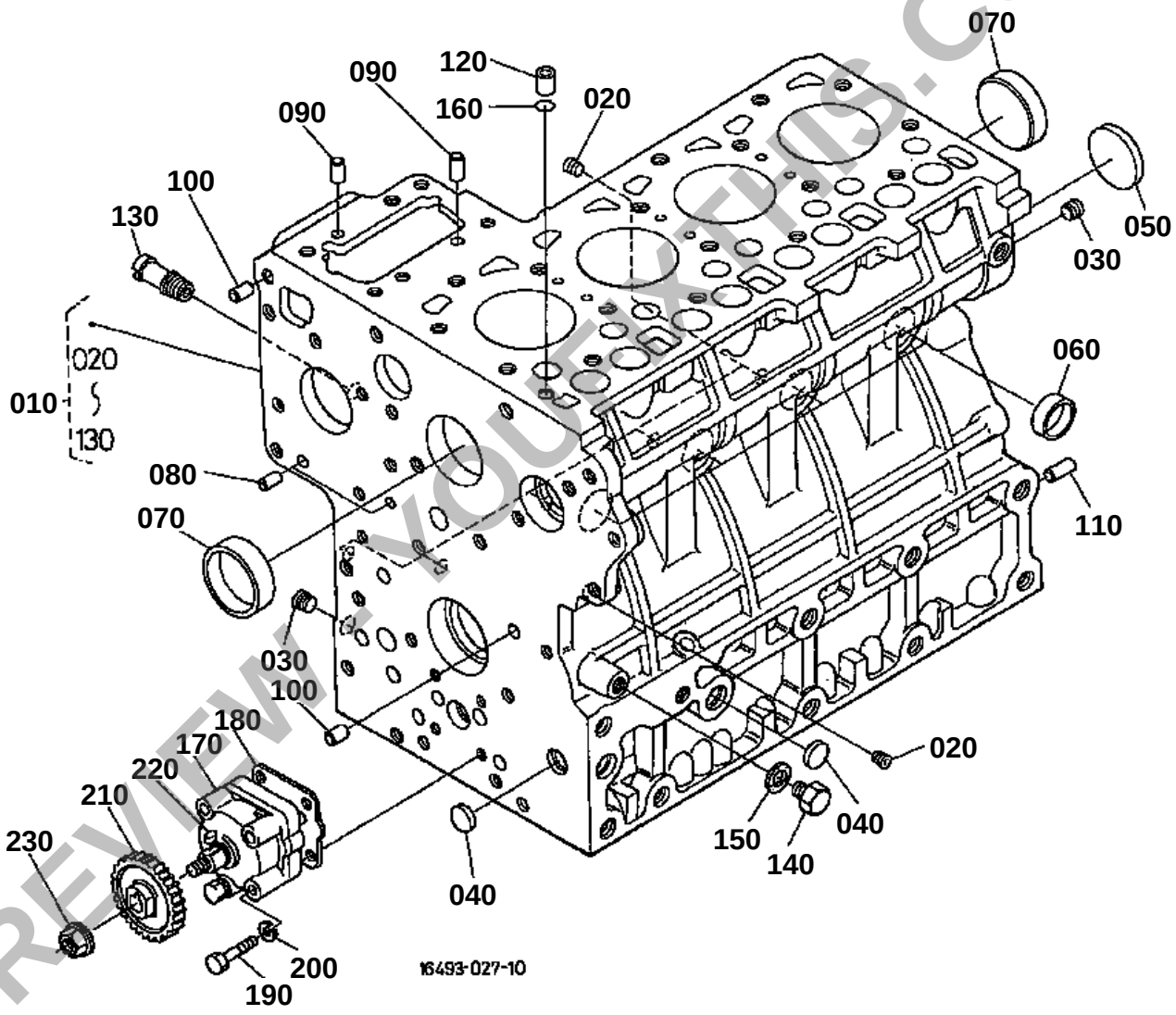

PREVIEW YOUFIXTHIS.COM

Download full manual at youfixthis.com

CRANKCASE

↔ Interchangeable; ≠ not interchangeable; ← new for old; → old for new

REF.No	Part No.	Description	Q'ty	S.No.	I/C	REMARKS	Weight (kgf)	Weight (lb)
010	16493-01010	COMP.CRANKCASE	1	<=1Y0374			54.5	119.9
010	16493-01014	COMP.CRANKCASE	1	>=2A0001	←		61	134.2
020	15521-96020	PLUG	6				0.003	0.0066
030	15521-96030	PLUG	2				0.007	0.0154
040	17391-96160	PLUG EXPANSION	3				0.003	0.0066
050	06311-75045	PLUG EXPANSION	1				0.026	0.0572
060	15221-03380	CAP SEALING	6				0.017	0.0374
070	15221-03390	CAP SEALING	2				0.03	0.066
080	05012-00408	PIN STRAIGHT	2				0.001	0.0022
090	05012-00609	PIN STRAIGHT	2				0.003	0.0066
100	05012-00612	PIN STRAIGHT	2				0.003	0.0066
110	05012-01018	PIN STRAIGHT	1				0.012	0.0264
120	15221-33650	PIN PIPE	1				0.004	0.0088
130	15321-73340	PIPE WATER RETURN	1				0.016	0.0352
140	15221-33610	PLUG	1				0.009	0.0198
150	15021-33660	GASKET	1				0.001	0.0022
160	15221-33700	O RING	1				0.001	0.0022
170	15471-35012	ASSY PUMP OIL	1				0.55	1.21
180	15296-35150	GASKET OIL PUMP	1				0	0
180	1A021-35150	GASKET OIL PUMP	1		↔		0.001	0.0022
190	01053-50650	BOLT	4				0.011	0.0242
200	04512-60060	WASHER SPRING	4				0.001	0.0022
210	19202-35660	GEAR OIL PUMP DRIVE	1				0.23	0.506
220	05712-00410	KEY FEATHER	1				0.001	0.0022
230	15221-35682	NUT FLANGE	1				0.014	0.0308

PREVIEW - YOUFIXTHIS.COM

Download full manual at youfixthis.com

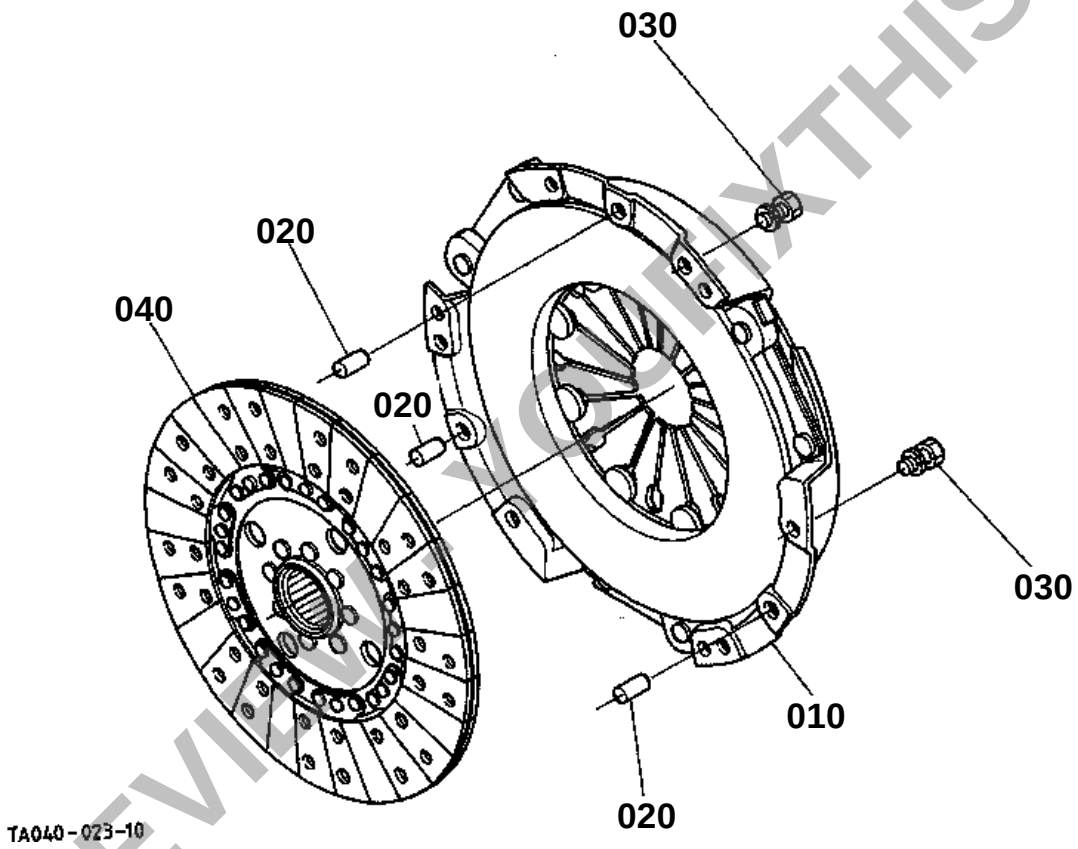

PREVIEW YOUFIXTHIS.COM

Download full manual at youfixthis.com

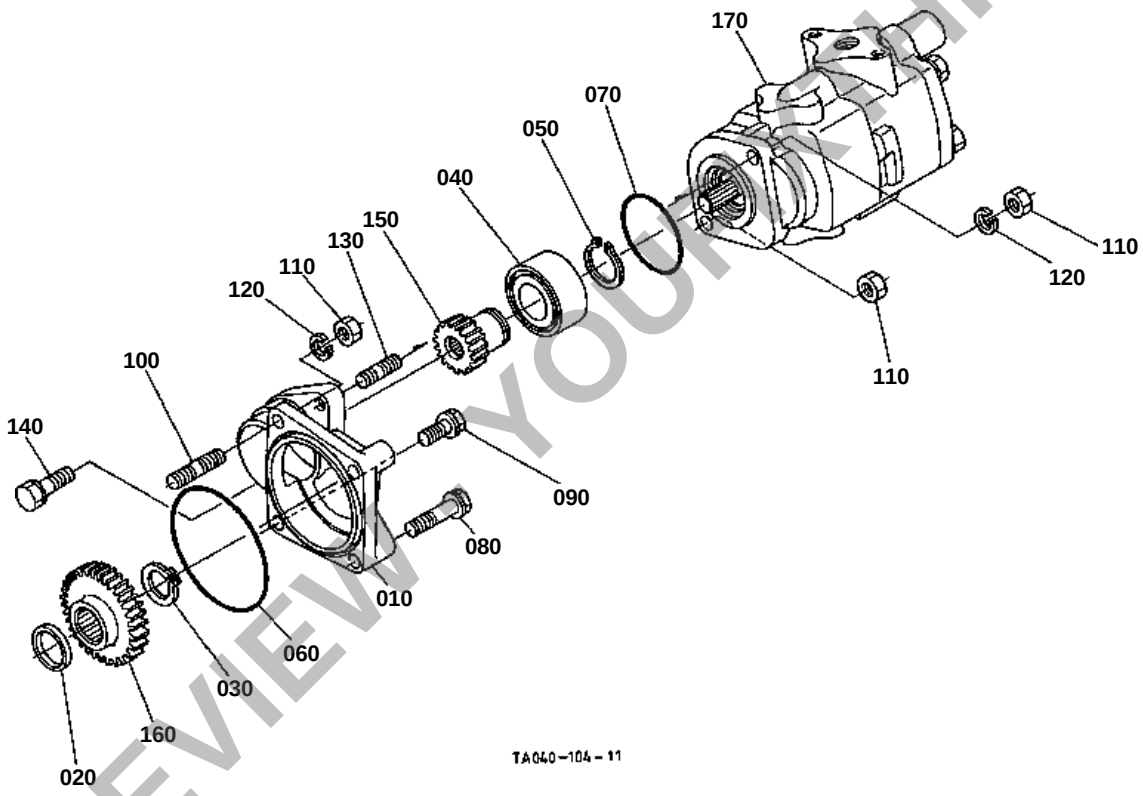

PREVIEW YOUFIXTHIS.COM

Download full manual at youfixthis.com

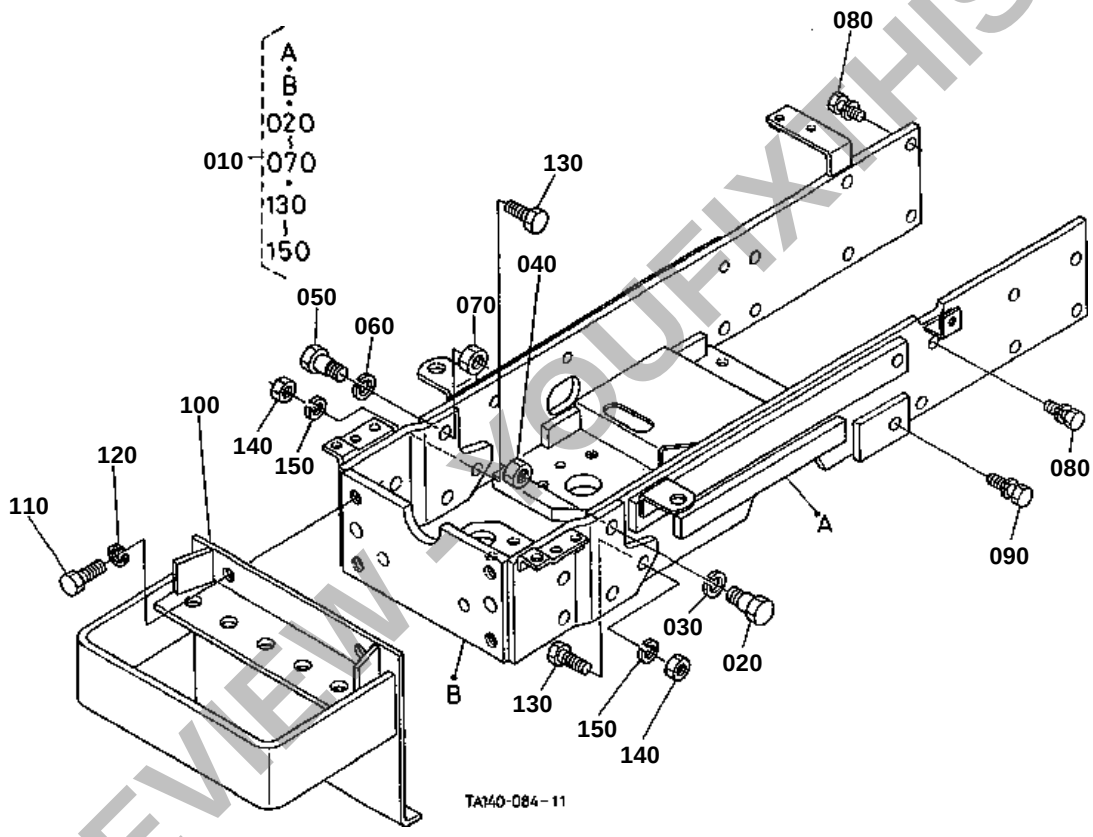

PREVIEW - YOUFIXTHIS.COM

Download full manual at youfixthis.com

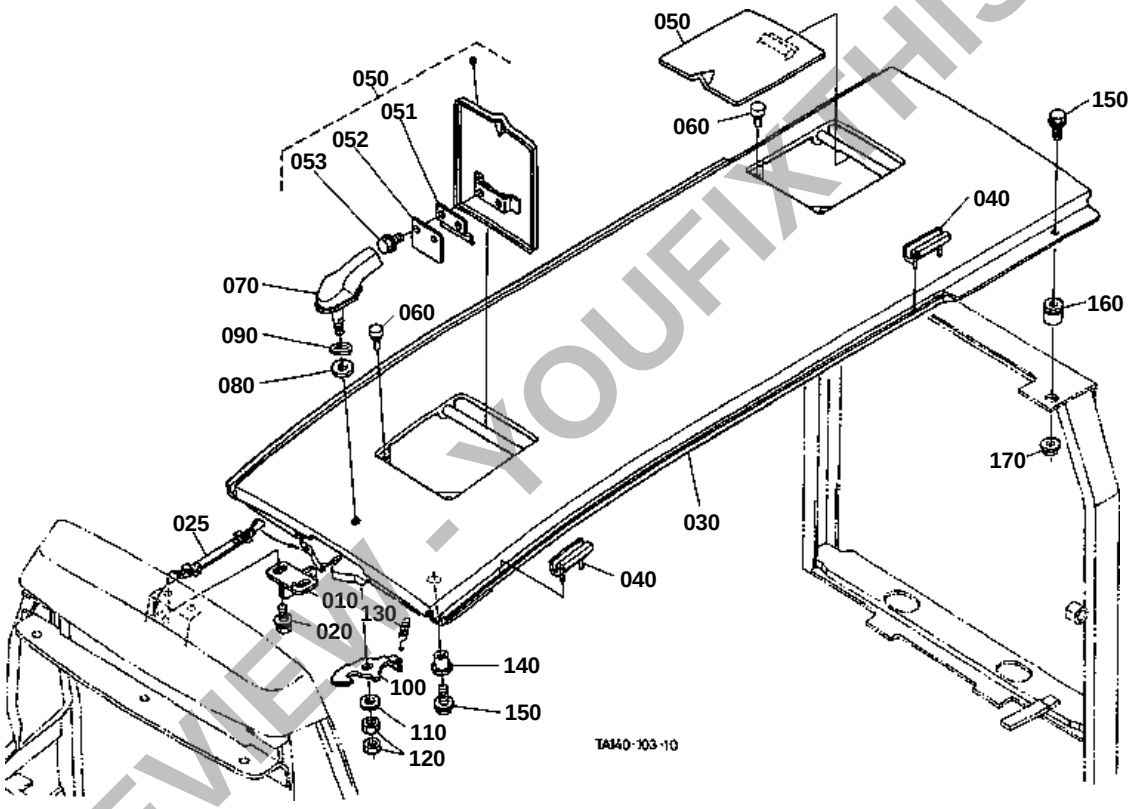

PREVIEW - YOUFIXTHIS.COM

Download full manual at youfixthis.com

Item	Part No.	Description	Book
ELECTRICAL SYSTEM	01B30402	LIGHT 1 [ROPS TYPE] [NEW TYPE]	100K0489
	01B50101	ELECTRICAL WIRING [EXCEPT HST TYPE] [ROPS TYPE]	100K0489
	01B50102	ELECTRICAL WIRING [EXCEPT HST TYPE] [ROPS TYPE]	100K0489
	01B50103	ELECTRICAL WIRING [HST TYPE] [ROPS TYPE][OLD TYPE]	100K0489
	01B50104	ELECTRICAL WIRING [HST TYPE] [ROPS TYPE][OLD TYPE]	100K0489
	01B50105	ELECTRICAL WIRING [HST TYPE] [ROPS TYPE][NEW TYPE]	100K0489
CLUTCH/TRANSMISSION/REAR AXLE	01C101	CLUTCH	100K0489
	01C201	CLUTCH LEVER	100K0489
	01C30101	CLUTCH PEDAL [EXCEPT HST TYPE] [ROPS TYPE]	100K0489
	01C30102	CLUTCH PEDAL [HST TYPE] [ROPS TYPE]	100K0489
	01C40101	CLUTCH HOUSING [MANUAL T/M TYPE]	100K0489
	01C40103	CLUTCH HOUSING [GST TYPE]	100K0489
	01C40104	CLUTCH HOUSING [HST TYPE]	100K0489
	01C405	GST VALVE [GST TYPE]	100K0489
	01C406	GST VALVE [GST TYPE] [COMPONENT PARTS]	100K0489
	01C407	GST VALVE [GST TYPE] [COMPONENT PARTS]	100K0489
	01C408	GST VALVE [GST TYPE] [COMPONENT PARTS]	100K0489
	01C41001	MID CASE [MANUAL T/M TYPE] [WITH IND-PTO]]	100K0489
	01C41002	MID CASE [GST TYPE] [W/O IND-PTO]	100K0489
	01C41004	MID CASE [HST TYPE] [OLD TYPE]	100K0489
	01C41005	MID CASE [HST TYPE] [NEW TYPE]	100K0489
	01C415	HST [COMPONENT PARTS] [HST TYPE]	100K0489
	01C42001	TRANSMISSION CASE [MANUAL T/M TYPE] [W/O MID PTO]	100K0489
	01C42003	TRANSMISSION CASE [GST TYPE] [W/O MID PTO]	100K0489
	01C42004	TRANSMISSION CASE [HST TYPE] [WITH MID PTO]	100K0489
	01D10101	MAIN SHAFT [EXCEPT HST TYPE] [W/O IND-PTO]	100K0489
	01D10102	MAIN SHAFT [EXCEPT HST TYPE] [WITH IND-PTO]	100K0489
	01D10103	MAIN SHAFT [HST TYPE]	100K0489
	01D103	INPUT SHAFT [HST TYPE]	100K0489
	01D10501	COUNTERSHAFT [MANUAL T/M TYPE]	100K0489
	01D10502	COUNTERSHAFT [GST TYPE]	100K0489
	01D107	OUTPUT SHAFT [HST TYPE]	100K0489
	01D11001	HYDRAULIC CLUTCH [GST TYPE] [W/O IND-PTO]	100K0489
	01D11501	SHUTTLE SHAFT [MANUAL T/M TYPE]	100K0489
	01D11502	SHUTTLE SHAFT [GST TYPE]	100K0489
	01D11701	RANGE GEAR SHAFT [MANUAL T/M TYPE]	100K0489
	01D11702	RANGE GEAR SHAFT [GST TYPE]	100K0489
	01D12503	SPIRAL BEVEL PINION [EXCEPT HST TYPE] [W/O CREEP]	100K0489
	01D12504	SPIRAL BEVEL PINION [EXCEPT HST TYPE][WITH CREEP]	100K0489
	01D12505	SPIRAL BEVEL PINION [HST TYPE]	100K0489
	01D127	REAR DIFFERENTIAL	100K0489
	01D13001	PTO COUNTERSHAFT [EXCEPT HST TYPE] [WITH IND-PTO]	100K0489
	01D13002	PTO COUNTERSHAFT [EXCEPT HST TYPE] [W/O IND-PTO]	100K0489
	01D13201	PTO CLUTCH [EXCEPT HST TYPE] [WITH IND-PTO]	100K0489
	01D13202	PTO CLUTCH [EXCEPT HST TYPE] [W/O IND-PTO]	100K0489

PREVIEW - YOUFIXTHIS.COM
Download full manual at youfixthis.com

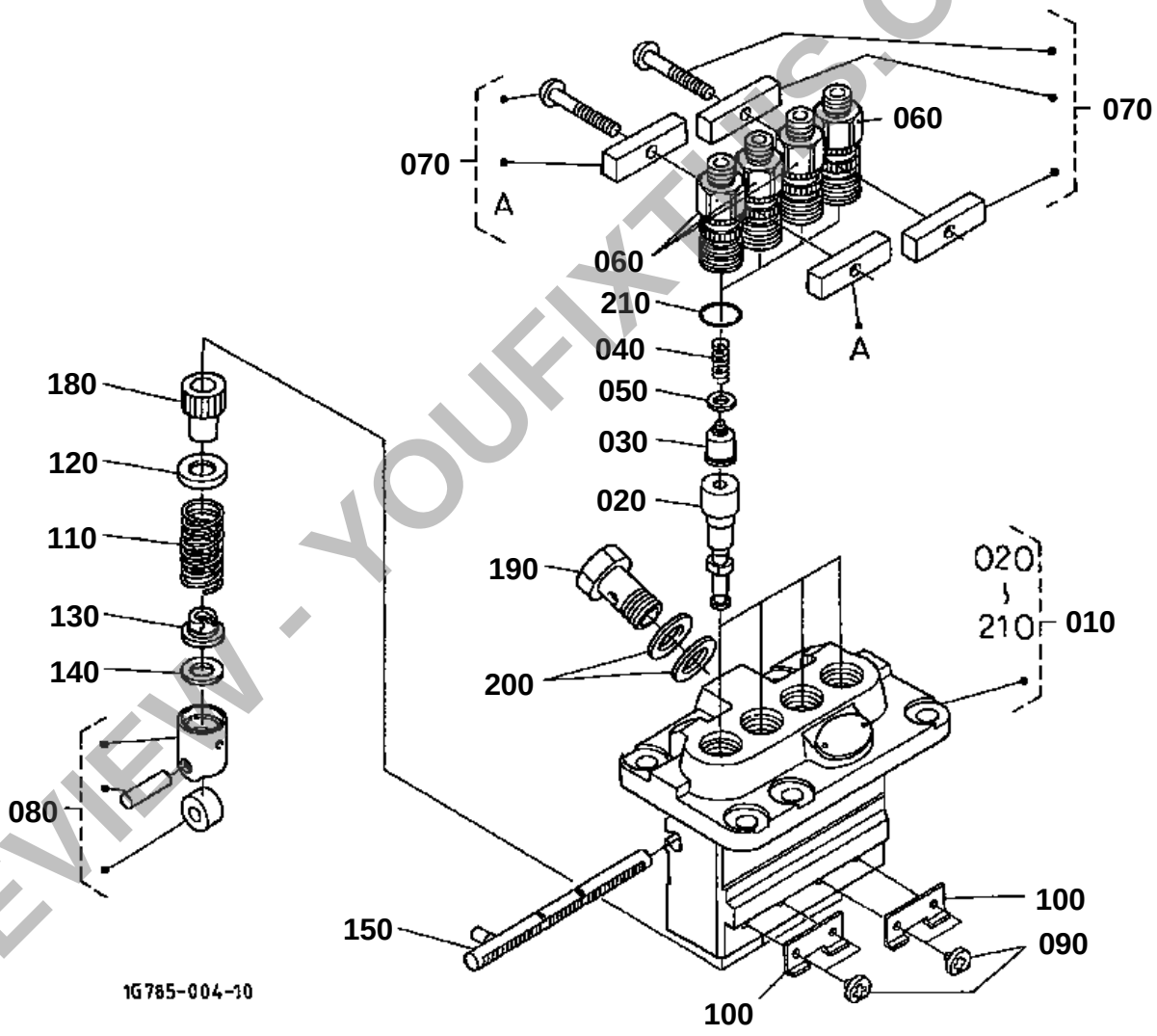

PREVIEW - YOUFIXTHIS.COM

Download full manual at youfixthis.com

010 TA140-9320-0

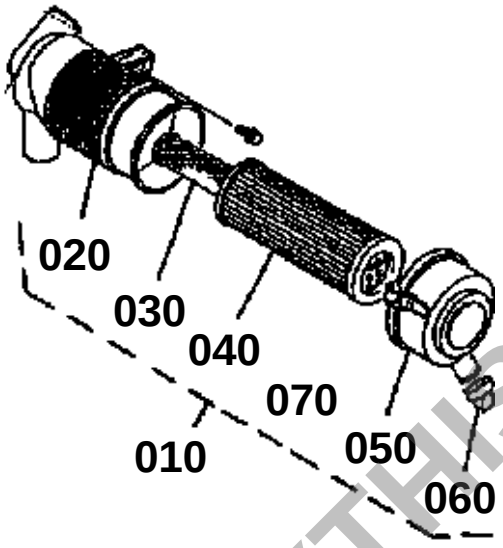

PREVIEW - YOUFIXTHIS.COM

TA140-817-10

Download full manual at youfixthis.com

↔ Interchangeable; ≠ not interchangeable; ← new for old; → old for new

REF.No	Part No.	Description	Q'ty	S.No.	I/C	REMARKS	Weight (kgf)	Weight (lb)
010	TA040-74020	STAY ALTERNATOR	1				0.09	0.198
020	17371-74280	PULLEY FAN DRIVE	1				0.98	2.156
030	05712-00720	KEY FEATHER	1				0.008	0.0176
040	34070-75602	ASSY ALTERNATOR	1	<=74270			0	0
050	01173-51000	BOLT	1				0.06	0.132
060	02116-50100	NUT	1				0.004	0.0088
070	04512-60100	WASHER SPRING	1				0.002	0.0044
080	04011-50100	WASHER PLAIN	1				0.002	0.0044
090	01153-60830	BOLT	1				0.025	0.055
100	04015-60080	WASHER PLAIN	1				0.01	0.022
110	04512-60080	WASHER SPRING	1				0.002	0.0044
120	02056-50060	NUT	1	<=75376			0.002	0.0044
120	12264-92020	NUT SPRING WASHER M	1	>=75377	←		0.05	0.11
130	04512-60060	WASHER SPRING	1	<=75376			0.001	0.0022

PREVIEW - YOUFIXTHIS.COM

Download full manual at youfixthis.com

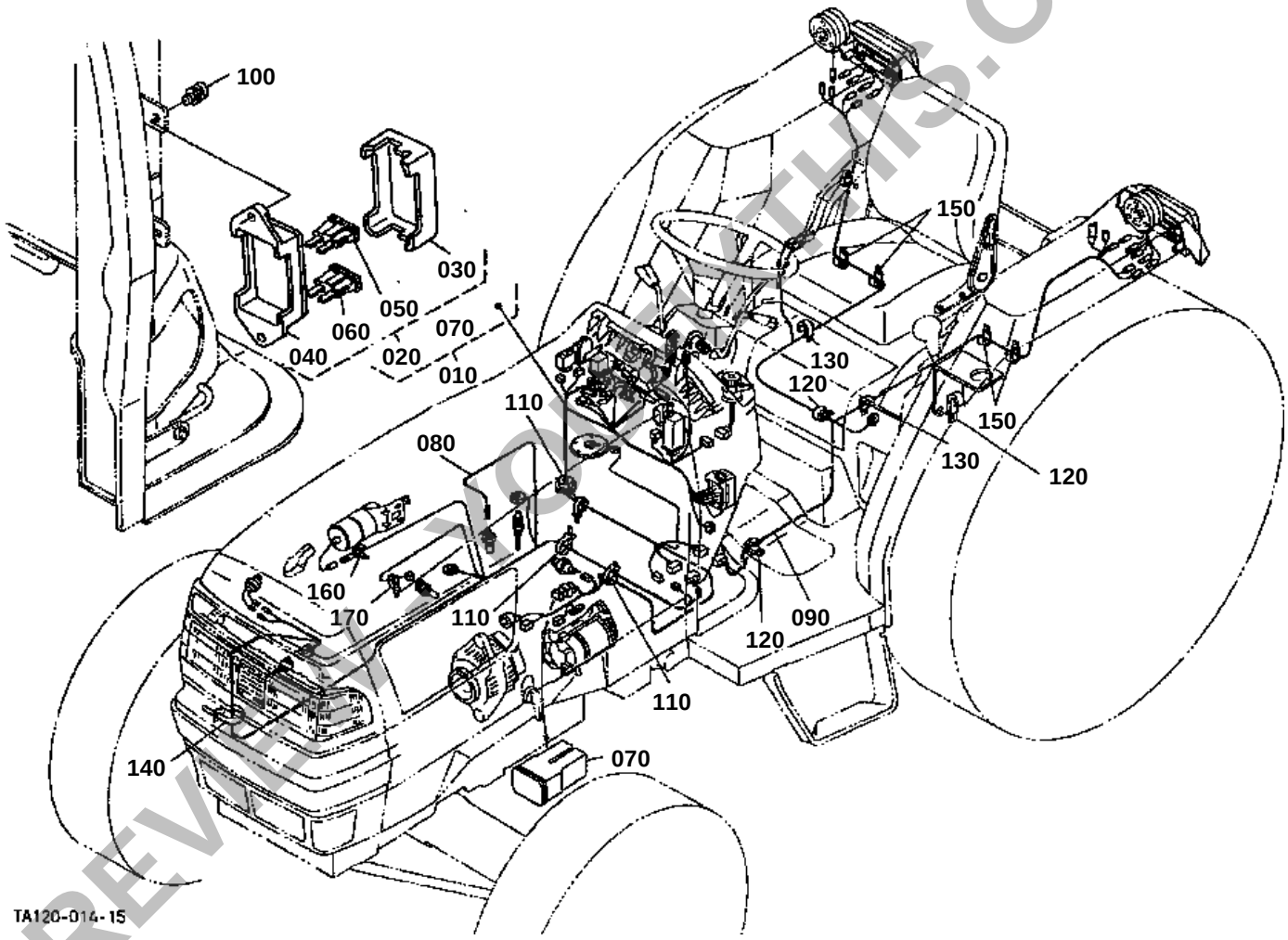

PREVIEW YOUFIXTHIS.COM

Download full manual at youfixthis.com

270 34076-6583-0
280 34076-6584-0

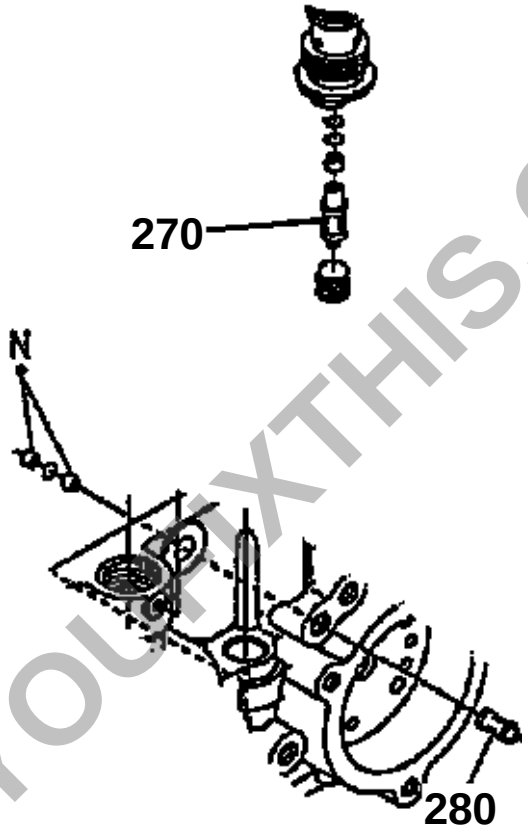

TA150-822-10

PREVIEW - YOUFIXTHIS.COM

Download full manual at youfixthis.com

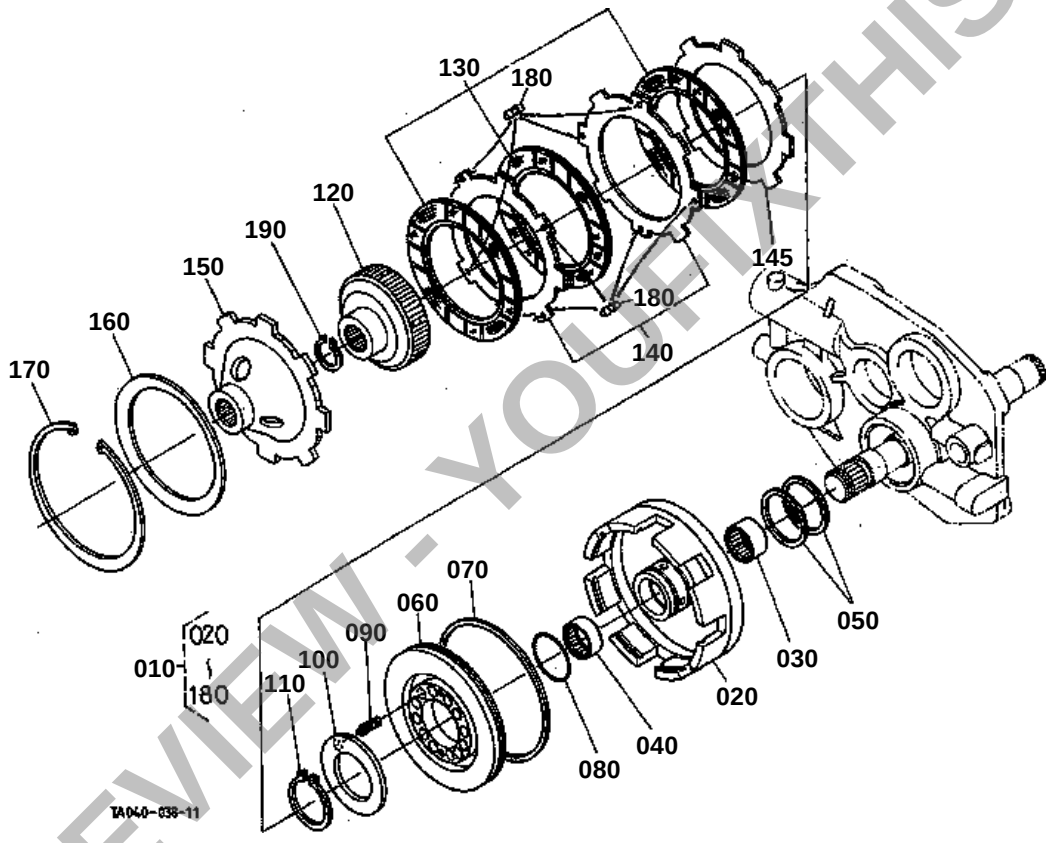

PREVIEW - YOUFIXTHIS.COM

Download full manual at youfixthis.com

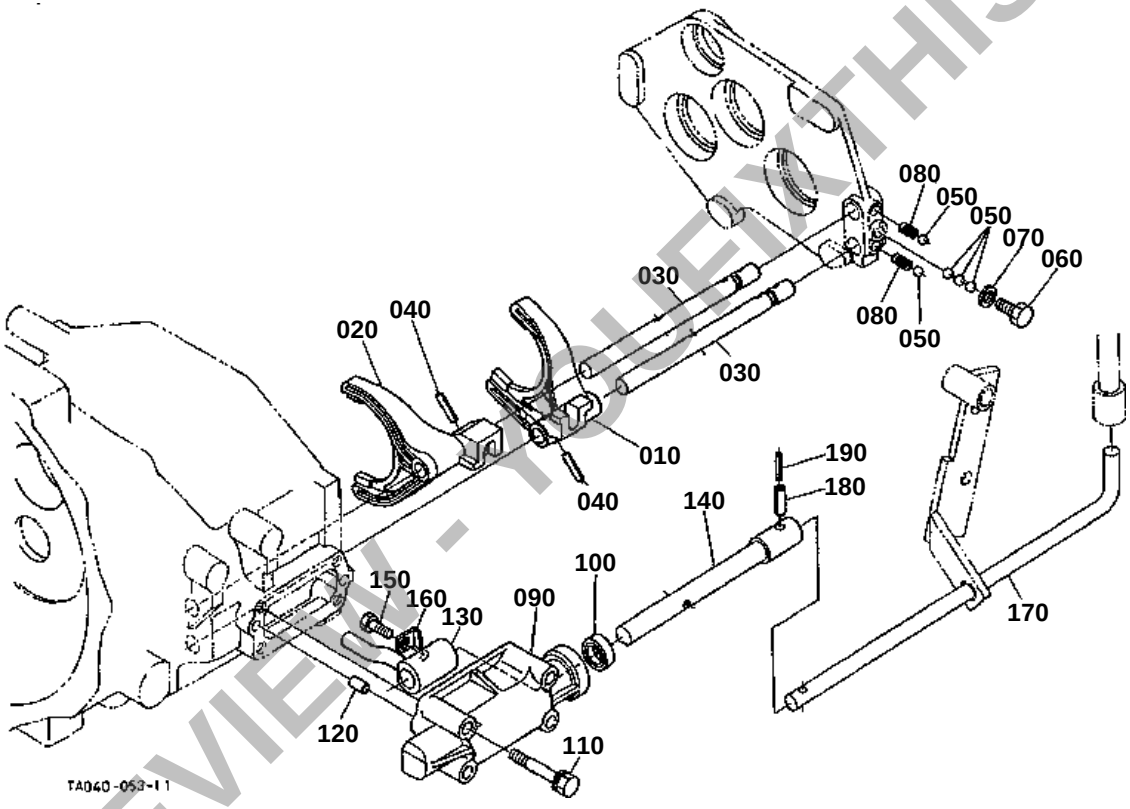

PREVIEW - YOUFIXTHIS.COM

Download full manual at youfixthis.com

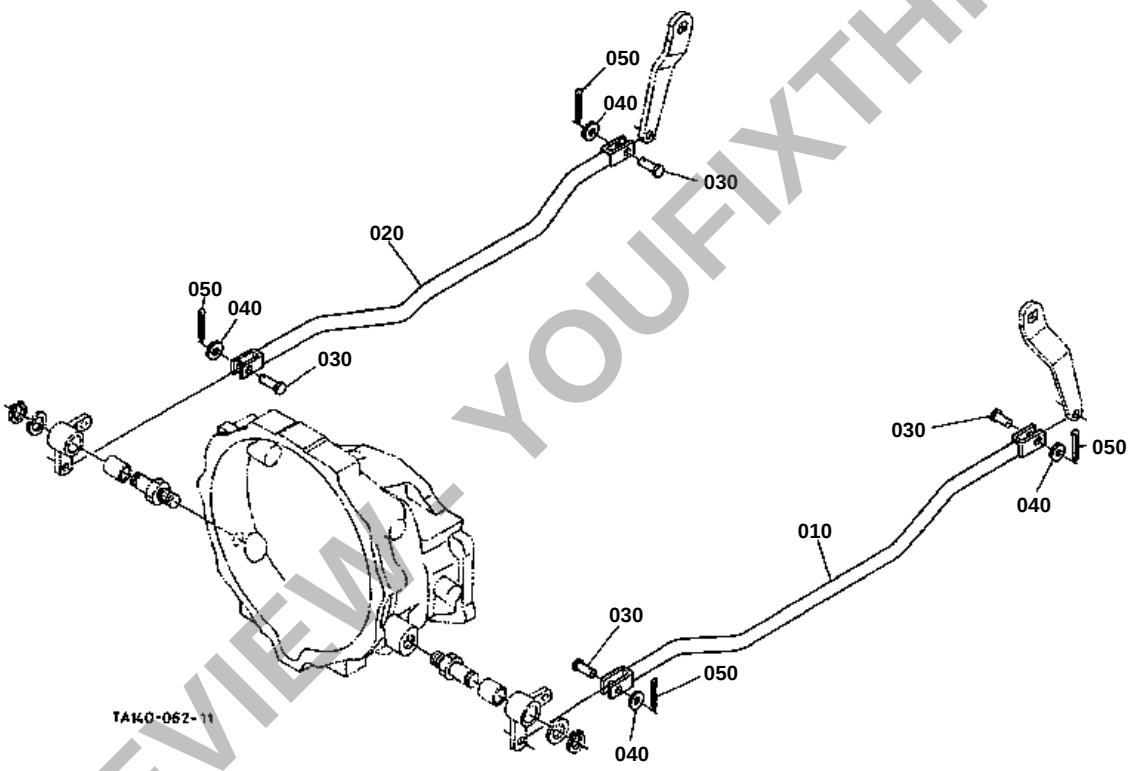

PREVIEW - YOUFIXTHIS.COM

Download full manual at youfixthis.com

↔ Interchangeable; ≠ not interchangeable; ← new for old; → old for new

REF.No	Part No.	Description	Q'ty	S.No.	I/C	REMARKS	Weight (kgf)	Weight (lb)
010	TA040-24600	ARM PTO SHIFT	1				0.105	0.231
020	TA040-24610	SPRING	1				0.029	0.0638
030	TA040-24620	LEVER PTO	1				0.08	0.176
040	04811-00200	O RING	1				0.001	0.0022
040	04817-00200	O RING	1		←		0	0
050	34070-24350	STOPPER	1				0.02	0.044
060	01754-50812	BOLT FLANGE	1				0.01	0.022
070	05411-00628	PIN SPRING	1				0.004	0.0088
080	TA040-24660	STAY WIRE	1				0.075	0.165
090	01123-60814	BOLT	1				0.008	0.0176
100	TA040-24652	WIRE PTO	1	<=50008			0.14	0.308
100	TA140-24650	WIRE PTO	1	>=50009	←		0.14	0.308
110	53226-54390	GROMMET	1				0.004	0.0088
120	04012-50060	WASHER PLAIN	2				0.001	0.0022
130	05511-51612	PIN SPLIT	2				0.001	0.0022
140	99999-99999	BLANK	0				0	0
150	99999-99999	BLANK	0				0	0
160	99999-99999	BLANK	0				0	0
170	TA040-69710	LEVER I-PTO	1				0.053	0.1166
180	04013-60080	WASHER PLAIN	1				0.002	0.0044
190	05511-50215	PIN SPLIT	1				0.001	0.0022
200	36919-27820	GRIP PTO LEVER	1				0.015	0.033
210	33251-29630	SPRING	1				0.013	0.0286

PREVIEW - YOUFIXTHIS.COM

Download full manual at youfixthis.com

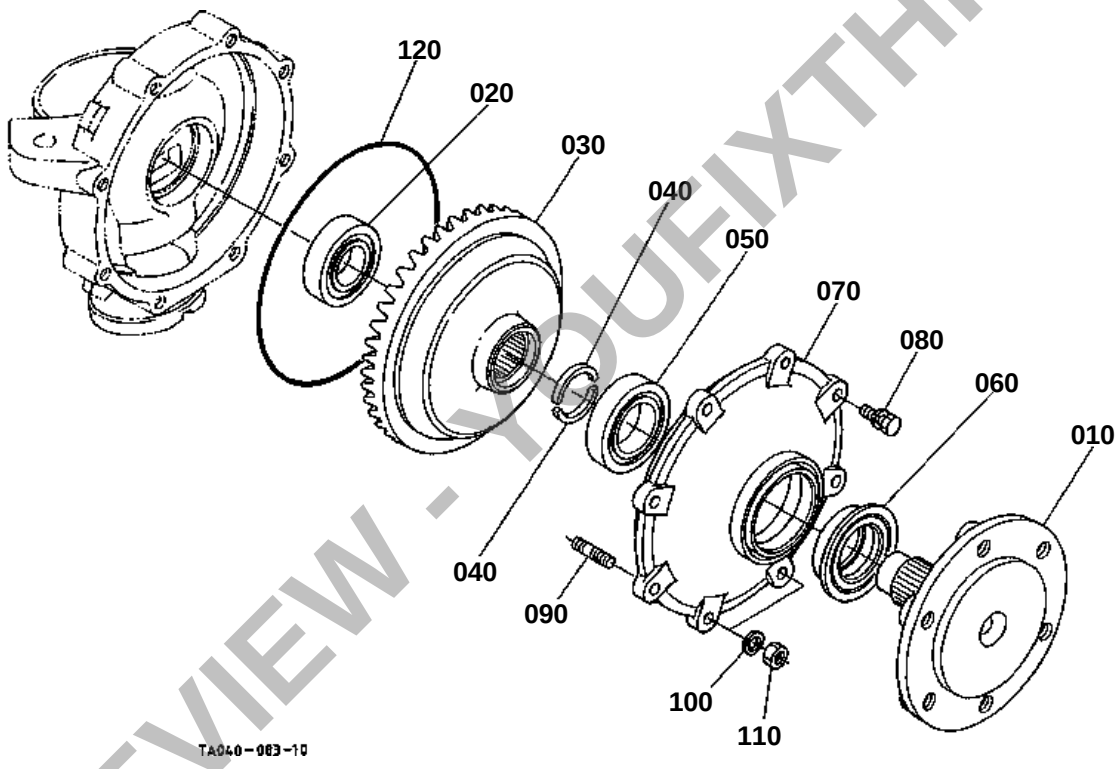

PREVIEW - YOUFIXTHIS.COM

Download full manual at youfixthis.com

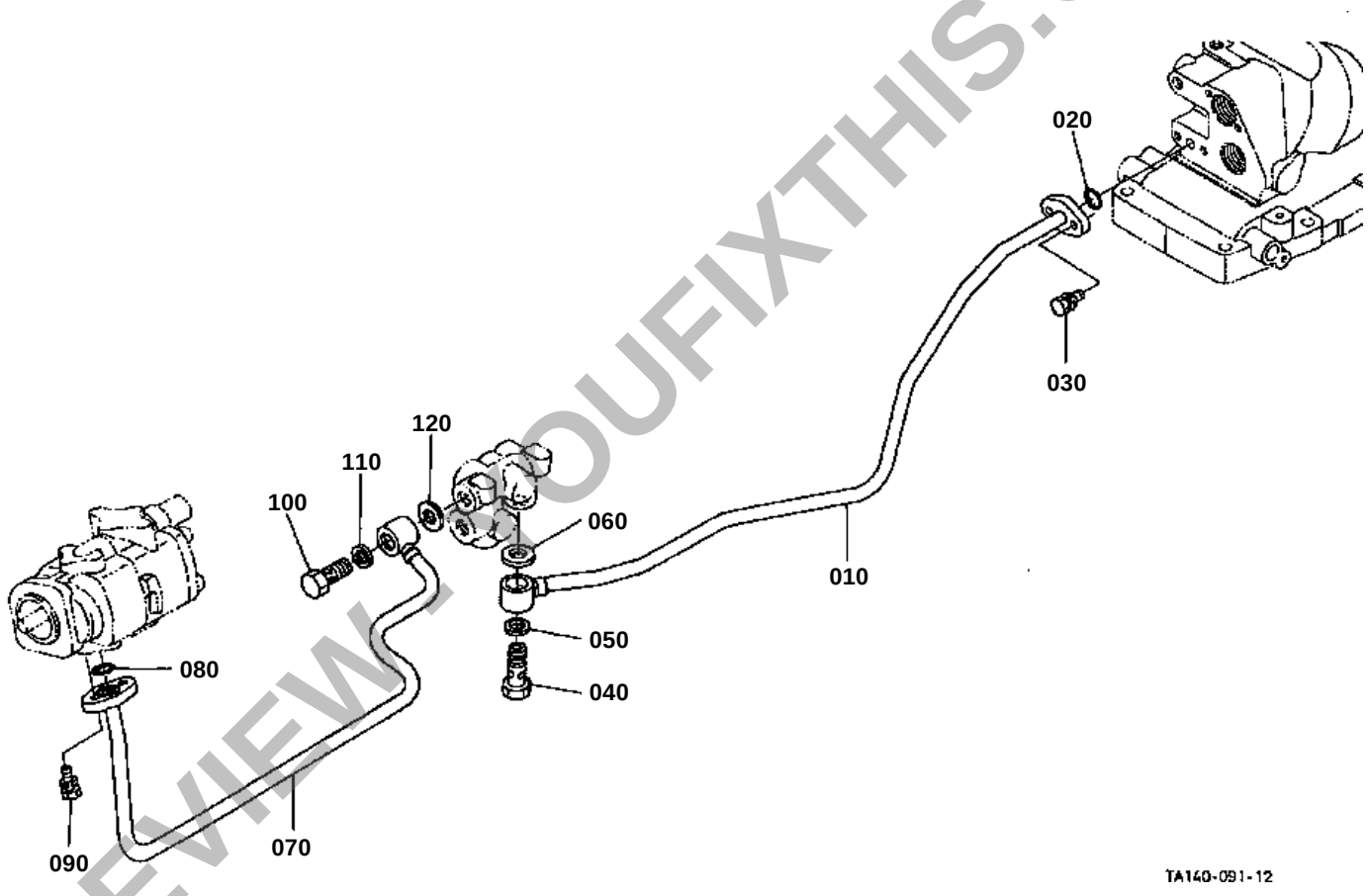

PREVIEW - YOUFIXTHIS.COM

Download full manual at youfixthis.com

↔ Interchangeable; ≠ not interchangeable; ← new for old; → old for new

REF.No	Part No.	Description	Q'ty	S.No.	I/C	REMARKS	Weight (kgf)	Weight (lb)
010	31351-39603	ASSY VALVE CONTROL	1				0	0
020	31351-39630	SPRING SPOOL	1				0.02	0.044
030	31351-39640	HOLDER SPRING	1				0.02	0.044
040	01311-10814	BOLT HEX-SOC-HD	1				0.012	0.0264
050	31351-39650	PLUG	1				0.04	0.088
060	31351-39150	POPPET	1				0.02	0.044
070	67531-38470	SPRING	1				0.001	0.0022
080	04811-00140	O RING	1				0.001	0.0022
090	31351-39660	PLATE	1				0.05	0.11
100	31351-39670	POPPET	1				0.01	0.022
110	31351-39680	SPRING	1				0.01	0.022
120	04811-00160	O RING	1				0.001	0.0022
130	01023-50614	BOLT	2				0.005	0.011
140	31351-39690	PLUG	1				0.05	0.11
150	31391-39180	POPPET	1				0.015	0.033
160	31391-39190	SPRING	1				0.001	0.0022
170	04810-00090	O RING	1				0.001	0.0022
180	31351-39720	PIN FULCRUM	1				0.025	0.055
190	04811-00080	O RING	1				0.001	0.0022
200	31351-39730	PLUG	1				0.05	0.11
210	31351-39180	POPPET	1				0.025	0.055
220	31351-39190	SPRING	1				0.008	0.0176
230	04810-06100	O RING	1				0.001	0.0022
240	04811-00050	O RING	1				0.001	0.0022
250	31351-39290	RING BACK UP	1				0.001	0.0022
260	31351-39740	RETAINER ROD	1				0.005	0.011
270	31351-39750	PLATE JOINT	1				0.05	0.11
280	02156-50080	NUT	2				0.004	0.0088
290	04111-50080	WASHER	2				0.001	0.0022
300	03650-50816	SCREW SET	1				0.01	0.022

PREVIEW - YOUFIXTHIS.COM

Download full manual at youfixthis.com

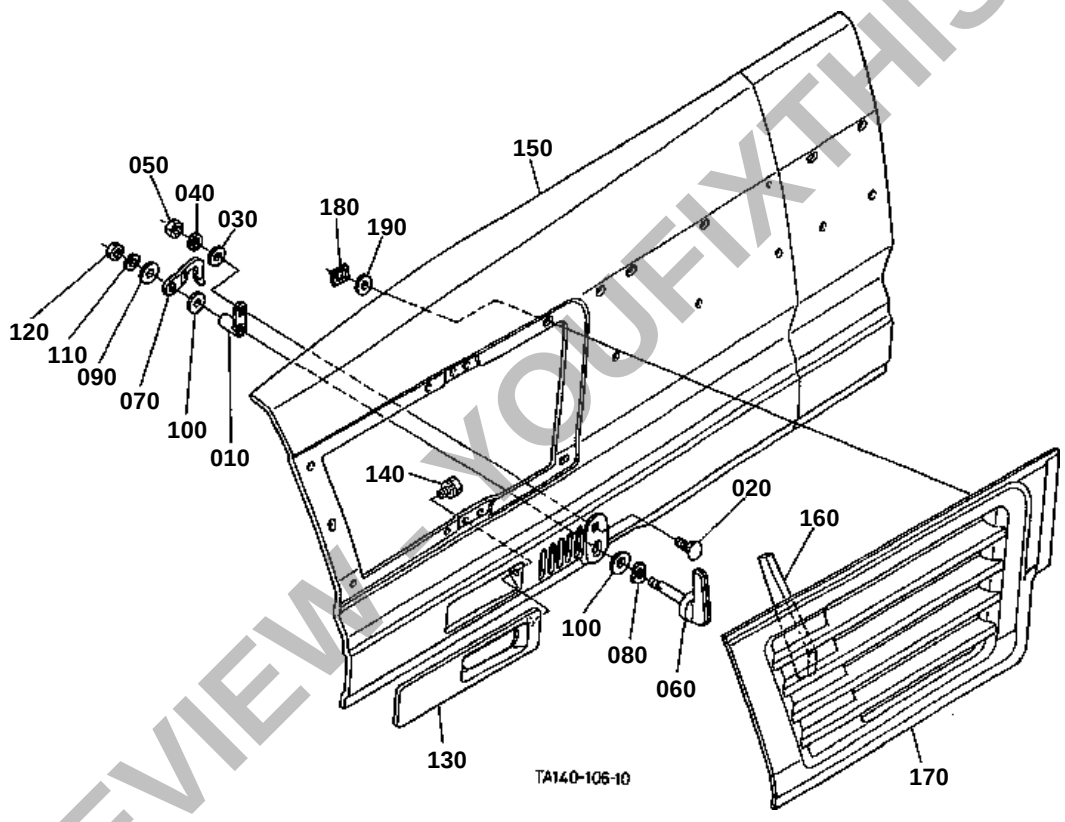

PREVIEW - YOUFIXTHIS.COM

Download full manual at youfixthis.com

105 TA140-4746-0

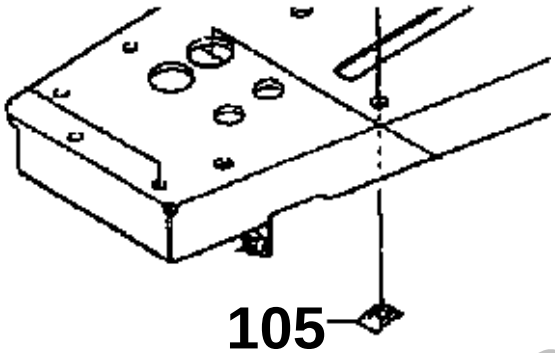

PREVIEW - YOUFIXTHIS.COM

TA140-848-10

Download full manual at youfixthis.com

↔ Interchangeable; ≠ not interchangeable; ← new for old; → old for new

REF.No	Part No.	Description	Q'ty	S.No.	I/C	REMARKS	Weight (kgf)	Weight (lb)
010	TA040-27700	ASSY REAR WHEEL	1				0	0
020	TA040-27710	ASSY REAR WHEEL RH	1				0	0
030	TA040-27730	TIRE	1				0	0
040	35060-27840	RIM	1				0	0
050	35080-27660	DISK	1				0	0
060	75599-07760	HEXAGONE BOLT	4				0	0
070	70070-02009	WASHER	4				0	0
080	75599-31013	HEX.NUT	4				0	0
090	TA040-27750	LABEL TIRE RH	1				0	0
100	TA040-27720	ASSY REAR WHEEL LH	1				0	0
110	TA040-27730	TIRE	1				0	0
120	35060-27840	RIM	1				0	0
130	35080-27660	DISK	1				0	0
140	75599-07760	HEXAGONE BOLT	4				0	0
150	70070-02009	WASHER	4				0	0
160	75599-31013	HEX.NUT	4				0	0
170	TA040-27760	LABEL TIRE LH	1				0	0
180	01073-51630	BOLT	8	<=72536			0.079	0.1738
180	01033-51630	BOLT	8	>=72537	←		0	0
190	02076-50160	NUT	4				0.03	0.066
200	01517-51632	STUD	4	<=74528			0.076	0.1672
200	01517-51635	STUD	4	>=74529	←		0.08	0.176
210	04512-60160	WASHER SPRING	12	<=72536			0.01	0.022
210	04512-60160	WASHER SPRING	4	>=72537			0.01	0.022

PREVIEW - YOUFIXTHIS.COM

Download full manual at youfixthis.com

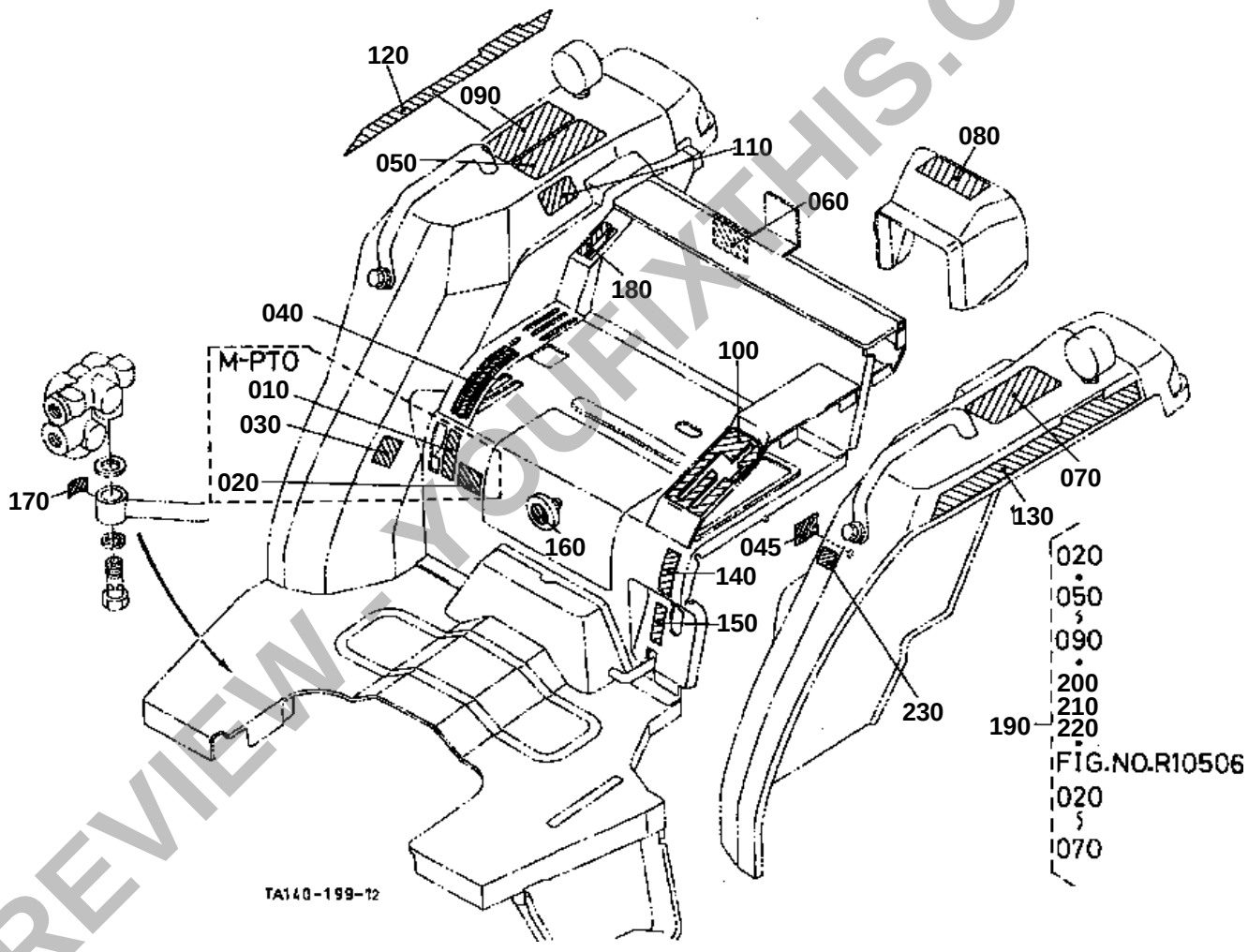

PREVIEW - YOUFIXTHIS.COM

Download full manual at youfixthis.com

PREVIEW ONLY

You're viewing 25 of 574 pages

The full manual includes:

- All 574 pages, complete
- Searchable PDF (find any keyword)
- No watermarks
- Instant download
- Print-ready quality

GET FULL MANUAL NOW

Kubota L3710DT, L3710GST, L3710HST Parts Catalog

Scan or click anywhere
youfixthis.com

Click anywhere on this page to get the full manual