Machine			**A 308**	**A 308**
Type			**374**	**374**
Valid from Serial No.			**101**	**12009**
GENERAL				
Machine weight with support		t	7,3	=
Machine weight with backhoe attachment		t	8,8 - 9,6	=
Length with adj. boom / travel position		mm	5720 (with blade)	=
Total width		mm	2250	=
Total height without attachment		mm	3000	=
Tail swing from center of excavator		mm	1360	=
Ground clearance		mm	300	=
Digging force / breakout force		KN	43,7 / 58	=
Drawbar pull, max. (in off road gear and max. operating pressure)		KN	50	=
ENGINE				
Type			BF 4 M 1011 F	BF 4 M 2011
Rating at nominal speed per DIN ISO 3046-1		KW	53 (72 HP)	56 (76 HP)
Nominal speed		RPM	2300	=
Max. torque		Nm	232 at 1900 RPM	270 at 1600 RPM
Stroke volume		l / gal	2,91 / 0,76	3,108 / 0,81
Bore / Stroke		mm	91 / 112	94 / 112
Oil quantity in engine (fill quty. at oil change with filter replacement)		l /gal	12,8 / 3,37	=
Oil specification / viscosity from -10° to +20° C			API: CD/SE 20W - 20, see also group 1.50	
Oil change intervals		hrs.	500, see also Group 1.50	=
Firing order			1 - 3 - 4 - 2	=
Compression ratio			17 : 1	17,5 : 1
Valve play cold Exhaust / Intake		mm	0,5 / 0,3	=
Compression pressure at starter speed		bar	22 - 30	=
Fuel injection pressure		bar	205 +8 (new 210 +8)	=
Max. machine inclination to all sides (front, rear , left and right)		degree °	30	=
Fuel tank capacity		l / gal	160 / 42,26	=
HYDRAULIC SYSTEM (High pressure circuit)				
Hydraulic pumps High pressure P1 / P2		Type	A10 VO 45 DFSR	=
Pump design			Axial piston swash plate pump	=
Hydraulic power		KW	42	=
Max. flow		l / min / gal	2 x 103 / 2 x 27,1	=
Regulation begin pump P1 / P2		bar	180 $\pm$ 10	=
Operating pressure (primary pressure)		bar	320 -10	=
Pressure cut off		bar	320 -10	=
Primary pressure - swing gear		bar	200 +10	=
Secondary pressure - Working cylinder		bar	330 +10	=
Secondary pressure - Travel motor		bar	350 +10	=
Hydraulic oil quantity (Oil change with filter change)		l / gal	appr. 140 / appr. 37,0	=
Oil quality / viscosity - Oil change intervals		hrs.	see Group 1.50	=
Filter change intervals		hrs.	50 / 500	=
Control block		Type	NG 16	=
Rotary connection 7-way		Type	DDF 720	=
Rotary connection 6-way		Type	815.006	=
Boom cylinder	∅Piston / ∅Piston rod	mm	110 / 70 (1x)	=
Stick cylinder	∅Piston / ∅Piston rod	mm	90 / 60 (1x)	=
Bucket cylinder	∅Piston / ∅Piston rod	mm	80 / 60 (1x)	=
Adj. cylinder	∅Piston / ∅Piston rod	mm	90 / 60 (2x)	=
Hydraulic pump / Servo control + Brake		Type	Gear pump	=
Flow quantity, max.		l / min - gal / min	25 - 6.5	=
Flow divider K (brake) / R (Servo control)		l / min - gal / min	2 / 23 - 0,5 / 5,9	=
Pressure limitation / Servo control		bar	32 $\pm$1	=
Servo control / Attachment - swing gear		Type	VG - 7 - 4	=
Servo control / Travel drive		Type	VG - 7 - 1	=

PREVIEW - YOUFIXTHIS.COM

Download full manual at youfixthis.com

Components and corresponding pressure relief valves	Machine R 312 Pressure limitation (values in bar) primary pressure	secondary pressure
Servo pressure		
Pressure relief valve 51 for servo pressure (in control oil unit 50)	32 ± 1	
Primary relief		
Primary relief valves 191 and 192 for swing gear in swing motor 190	230 + 10	
Operating pressures for working movements **on pressure cut off 26** on variable displacement pumps 20	320 - 10	
Primary relief valves 66 und 67 for Attachment kit AS1 (in compact valve block 150)	120 + 10	
Secondary relief		
Secondary pressure relief valves 127 and 128 for stick cylinder 170 (in control valve block 100)		330 + 10
Secondary pressure relief valves 129 and 130 for travel motor left 200 (in control valve block 100)		330 + 10
Secondary pressure relief valves 131 and 132 for travel motor right 201 (in control valve block 100)		330 + 10
Secondary pressure relief valves 133 and 134 for bucket cylinder 180 (in control valve block 100)		330 + 10
Secondary pressure relief valves 135 and 136 for boom cylinder 160 (in control valve block 100)		330 + 10
Secondary pressure relief valves 137 and 138 for adjust. cylinder 240 (in control valve block 100)		330 + 10
Lowering time of working attachment (on adjustment screw 162 of control piston 108)	3,5 sec.	

Hydr. flow quantities of pumps (Q max.)	from S-No. 101	from S-No. 257	from S-No. 267
Var. displacement pumps 20	2x112 l / min	2x114 l / min	2x120 l / min
	from S-No. 101	-	**from S-No. 267**
Gear pump 32 for added attachment kit	35 l / min	-	32 l / min
Gear pump 33 for brake und servo control	32 l / min	-	29 l / min

PREVIEW - YOUFIXTHIS.COM

LIEBHERR

Datum/Edition/Date
05.98

Benennung/Description/Dénomination

Hydraulic System Operating Pressures and Hydr. Flow

Download full manual at youfixthis.com

Typ / Model / Type: R 312

Ab/from/à partir de: 101

Item	Description	see Section
1	Hydraulic tank	
4	Return filter	
5	Bypass valve / Return filter (3 bar)	
6	Oil cooler	
7	Cooler stop valve (5.5 bar)	
8	Check valve / Tank pressurization	
9	Shut off valve / Tank pressurization	
10	Pressure reducing valve / Tank pr.	
20	Var. pump A 10 V DFLR	7.12
21	Var. pump A 10 V DFSR	7.12
22	Drive, complete	
23	Counter piston	
24	Control piston	
25	Flow regulator	
27	Pressure cut off with cut in stage	
28	Power regulator	
29	Power regulator with Cut in stage	
30	Zero stroke regulator	
32	Gear pump / low pressure circuit	
33	Gear pump / servo control	
34	Gear pump / steering	13.10
40	Test point P1	
41	Test point P2	
42	Test point - Servo pressure	
43	Test point - Added control valve block	
50	Servo oil unit	7.44
51	Pressure relief valve	
52	Filter	
53	Check valve	
54	Accumulator	
56	Solenoid valve - Servo control	
58	Solenoid valve - Oscillating axle support	
59	Solenoid valve - Swing brake	
60	Compact block 3- way / change over	
61	Solenoid valve - Travel direction	
62	Solenoid valve - Lift cylinder support	
63	Solenoid valve - Lift cylinder support	
64	Compact block 2-way / Change over	
65	Solenoid valve - Bucket swing bearing	
66	Solenoid valve - Bucket swing bearing	
68	Solenoid valve - Inching gear	
75	Change over valve - / Power increase P1	
76	Two way valve / Travel - Pressure increase	
77	Two way valve / Stick cylinder-Summation	
80	Servo control - left/ 4 -way	7.50
81	Servo control - right 4-way	7.50
84	Servo control 1- way	7.55
88	Brake pedal (swing gear)	9.20
99	Hose routing on machine without added control valve block	
100	Compact control valve block	7.64
101	Control piston - Swing gear	
102	Control piston - Stick cylinder	
104	Control piston - Travel motor	
106	Control piston - Travel motor Summation	
107	Control piston - Bucket cylinder	
108	Control piston - Boom cylinder	
109	Control piston - Summation/ Boom cyl. Summation / Stick cyl.	
110	To Control valve block - low pressure	
111	to Control piston - Swing cylinder	
112	to Control piston - Support cylinder	
115	Added control valve block 1- way	
120	Primary pressure relief valve P1	7.80
121	Primary pressure relief valve P2	7.80
122	Primary pressure relief valve P1	7.80
125	Primary pressure relief valve -swing gear	7.82
126	Primary pressure relief valve -swing gear	7.82
127	Sec.pressure relief valve Stick cylinder A2	7.82
128	Sec.pressure relief valve Stick cylinder B2	7.82
129	Sec.pr. relief valve Bucket cylinder B5	7.82
130	Sec.pr.relief valve Bucket cylinder A5	7.82
131	Sec.pr. relief valve Boom cylinder B6	7.82
132	Sec.pr. relief valve Boom cylinder A6	7.82
140	Suction valve - Travel motor A3	7.84
141	Suction valve Travel motor B3	7.84
150	Load holding valve	7.64
151	Load holding valve	7.64
152	Check valve	
160	Boom cylinder	7.30
161	Shut off / lock for street travel	
170	Stick cylinder	7.30
171	Restrictor check valve	7.88
180	Bucket cylinder	7.30
190	Swing motor / Drive	7.23
191	Pressure relief valve - turn right A	
192	Pressure relief valve - turn left B	
193	Suction valve	
194	Swing brake	9.20
195	Swing gear	9.10
210	Travel regulator motor / Drive	7.26
211	Adjust. unit	
212	Pressure relief valve - Travel forward A	
213	Pressure relief valve - Travel reverse B	
214	Brake valve - dual sided	
215	Two way valve	
240	To adj. cylinder / hydr. adj. boom	
260	Rotary connection 7-way	7.74
262	Rotary connection 6-way	7.72
270	Hose to oscillating axle support	14.10
280	Hose to Compact block - Brake system.	15.10
290	Hose to Solenoid valve / Parking brake	15.20

PREVIEW - YOUFIXTHIS.COM

Download full manual at youfixthis.com

2. Optimized oil change intervals through oil sample analysis and test reports

Using this procedure, take oil samples in certain preset intervals and have these samples tested. The intervals between two oil changes may be increased as long as the fluid properties remain satisfactory.

The point when the oil must be changed is determined by the test report.

Liebherr recommends to have the oil samples checked at "WEAR-CHECK". A set for 6 complete oil analysis at WEAR-CHECK is available (Id. No. 7018368). The set contains the oil sample container, documentation, packaging and a hose to take the oil sample.

A manual pump to take the oil sample is necessary, it can be ordered separately (Id. No. 8145666).

a) In normal applications

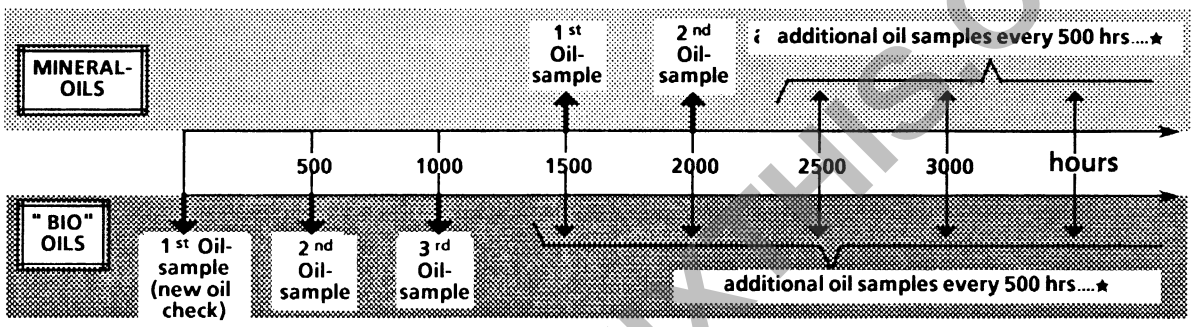

b) In dust intensive applications

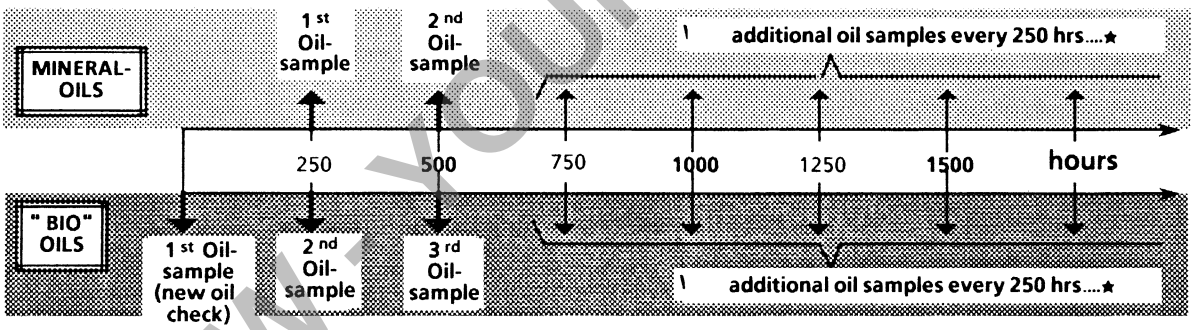

★ ...and point of oil change determined by the test report

Notes to reduce contamination of hydraulic fluids in dusty applications

If an hydraulic excavator is used generally with a hydraulic hammer, or if a machine is operated under similar, dusty conditions, then there is the danger that the hydraulic oil will be contaminated more than normally.

To prevent premature wear of hydraulic components, the intervals between oil changes (or taking oil samples) must be reduced, and the following must be noted:

- The filter element(s) in the return filter must be replaced every 100 operating hours.
- For the return filter, 10 µm filter elements must be used instead of the normal 20 µm filter elements.
- The bleeder filter on the hydraulic tank must be replaced with a fine filter 2 µm (the standard filter rating is 7 µm).
- The 2 µm bleeder filter must be replaced every time the hydraulic oil is changed (every 500 hours).

NOTE

The excavators with factory installed hydraulic hammer installation kits, as well as retrofitted hydraulic hammer installations have the 10 µm filter elements as well as the 2 µm bleeder filters installed.

PREVIEW - YOUFIXTHIS.COM
Download full manual at youfixthis.com

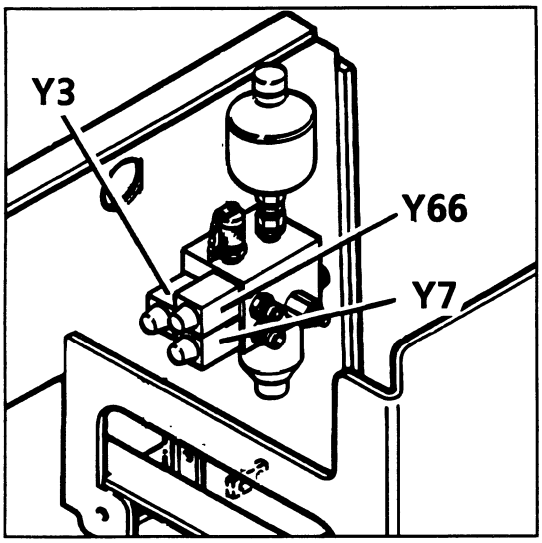

Y3 Solenoid valve servo pressure

Y7 Solenoid valve swing brake

Y66 Solenoid valve oscillating axle

located on servo oil unit

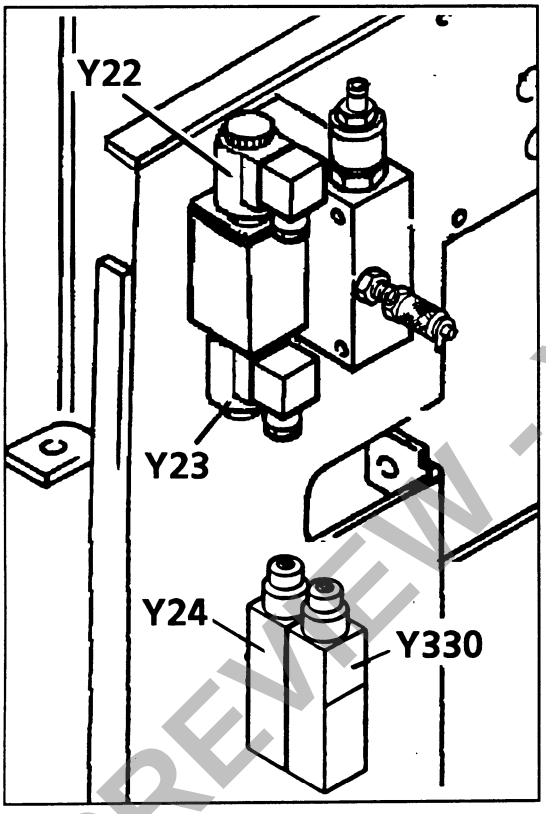

Y22 Solenoid valve grapple rotation left

Y23 Solenoid valve grapple rotation right

Y24 Solenoid valve creeper gear

Y330 Solenoid valve pump regulation Qmin P2 travel

located behind the valve block support

PREVIEW - YOUFIXTHIS.COM

Download full manual at youfixthis.com

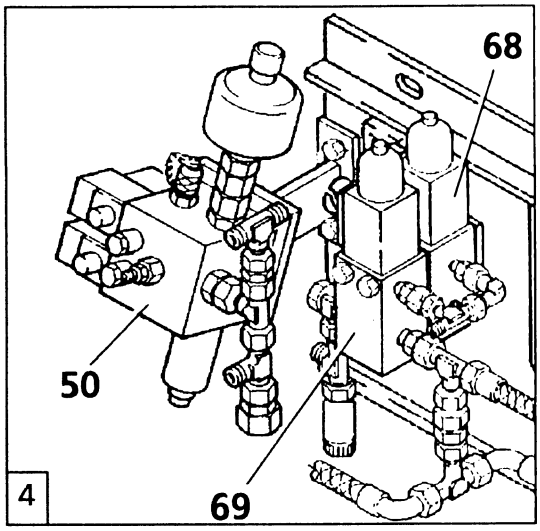

4. **Solenoid valve 69,** see fig. 4

   The solenoid valve 69 - together with the solenoid valve 68 (inching gear), located on the dividing wall of the excavator - forwards servo oil from the servo oil unit 50 to the spring accumulator cylinder 330 (the brake is released), or closes off the connection (the brake is applied).

5. **Servo control unit 50,** see fig. 4

   For description of servo oil unit, see section 7.44

6. **Check valve 78, switch B10 and S16 and indicator light H34,** see reverse page 15.20.02

Function of travel brake

1. **Switch S 16 in neutral position (closed position - brake is applied)**

   When switch S 16 is in neutral position (brake position), the solenoid valve 69 is in neutral position. The oil in the spring accumulator cylinder 330 flows via rotary connection 262 and solenoid valve 69, connection "A - T" to the hydraulic tank .

   The springs in the spring accumulator cylinder 330 push piston and piston rod inside and thereby move the eccentric pin via the brake road against the brake disks; which means the brake is being closed / applied. The indicator light in switch S16 lights up.

2. **Push switch S 16 into release position (the brake is released)**

   By pressing switch S 16 to bring it to release position, solenoid valve 69 is being moved.
   Oil from the servo oil unit 50 , via solenoid valve 69 connection " P - A " and rotary connection 262, actuates the piston of the spring accumulator cylinder 330 on both sides (piston bottom side via bore A). Due to the differential action of cylinder 330, the piston and piston rod is moved against the springs toward the outside and the eccentric pin over the brake rod, which means, the brake disks are released, Indicator light in switch S16 turns off.
   In case the Diesel engine should fail, the brake closes automatically, since there is no oil available via the servo control to keep the brake open/ released.

Sealing and repairs on the parking brake

Please refer to the separately issued repair guidelines **« Hurth - Axles «.**

1	to hydraulic tank
33	from gear pump / Servo control
42	Test point / Servo control
50	Servo oil unit
51	Pressure relief valve - 30 bar -
52	Filter
53	Check valve
54	Hydro accumulator
55	Brake accumulator (will be eliminated in series)
56	Solenoid valve / Servo (Y 69 *)
58	Solenoid valve / Oscillating axle (Y 73 *)
59	Solenoid valve / Swing brake (Y 7 *)
68	Solenoid valve / Inching gear
69	Solenoid valve / Parking Brake (Y 6 *)
78	Check valve
80	to servo controls
262	6- way Rotary connection
330	Spring accumulator cylinder
332	Disk brake
B10	Switch / Parking Brake
F 2	Fuse 7,5 A (*)
F 6	Fuse 7,5 A (*)
H33	to additional indicator lights (*)
H34	Indicator light / Parking Brake (*)
S 16	Taster (*)
S 58	to additional switches (*)
Y62/63	to solenoid valve/ travel forward /reverse(*)

* = Positions in Section 8.

PREVIEW - YOUFIXTHIS.COM

Download full manual at youfixthis.com

Function and power flow, see diagram on page 11.15.05

The input torque is transferred by the oil motor 40 via the tapered gear coupling 22 to the sun gear 7.
The sun gear 7 drives via 1. planetary stage 8 and sun gear 9 with the oil motor speed which was reduced by planetary stage I .

The sun gear 9 drives via 2. planetary stage 10 the sun gear 11 with the gear ration which was reduced by planetary stage II .

The sun gear 11 drives via 3. planetary stage 13 the gear housing 15 and the sprocket wheel, which is attached, with the reduced gear ratio of planetary stage III .

Total gear ratio - see Technical Data on page 11.15.02 - is determined by all three planetary stages. In the same ratio as the output RPM decrease, the output torque increases.

Gear Maintenance

The gear must be checked regularly - in intervals given in the Maintenance Guidelines, section 3. - including oil level and for leaks, as well as mounting of gear, sprocket wheel and oil motor must be checked.

The gear oil must also be replaced according to preset intervals as noted in the maintenance guidelines.

Travel gear repairs

Before attempting any travel gear repairs, refer to the separately issued booklet
« Repair Procedure - Travel gear / Trasmital » , which describes these repairs in detail.

PREVIEW - YOUFIXTHIS.COM

Download full manual at youfixthis.com

PREVIEW ONLY

You're viewing 7 of 1984 pages

The full manual includes:

- All 1984 pages, complete
- Searchable PDF (find any keyword)
- No watermarks
- Instant download
- Print-ready quality

GET FULL MANUAL NOW

Liebherr A 308, A 310B, A 312, A 316, R 308, R 310B, R 312 Service Manual

Scan or click anywhere
youfixthis.com

Click anywhere on this page to get the full manual