Blurred on purpose. The manual you buy has this page in full quality.

PREVIEW - YOUFIXTHIS.COM

Download full manual at youfixthis.com

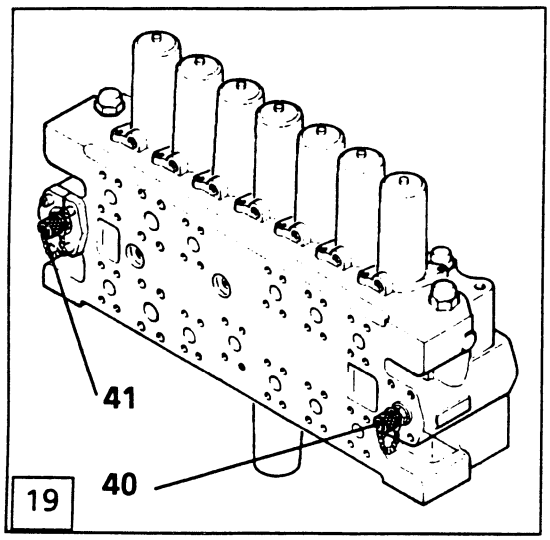

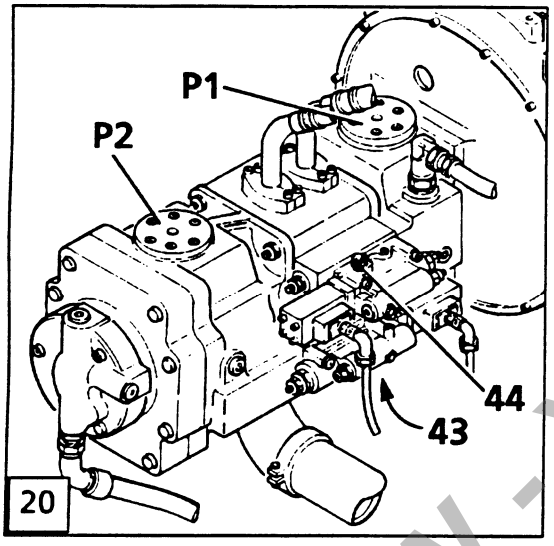

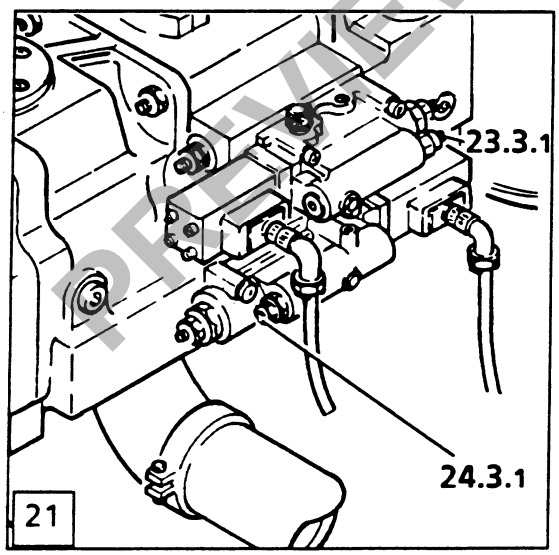

14. To adjust double pump
(Fig. 19 - 23)

See section 7.10 for description.

14.1 To adjust pressure cut off P1

Remove caps and install two pressure gauges to test points 41 and 44.

Readjust the primary pressure relief valve 121 to about 270 bar.

Extend the boom cylinders all the way to fully actuate pumps P1 and P2.

Slowly turn the primary pressure relief valve 121 and observe the high pressure and control pressure reading.

First the high pressure will increase on test point 41 and at the same time the control pressure on test point 44 (to about 1/2 of the high pressure).

After the pressure reaches regulation begin of pressure cut off 23.3, the control pressure drops on test point 44.

Read pressure on test point 41 and compare with regulation begin given on pressure chart.

Note:

At end of regulation of pressure cut off (on test point 41), test point 44 is without pressure.
If necessary, readjust adjustment screw 23.3.1 until the begin of regulation matches pressure on pressure chart.

Turn the adjustment screw clockwise to increase begin of regulation, turn counterclockwise to decrease begin of regulation.

14.2 To adjust pressure cut off P2

Remove caps and install two pressure gauges to test points 40 and 43.

Readjust the primary pressure relief valve 120 to about 270 bar. Extend the boom cylinders all the way to fully actuate pumps Pa and P2.

Slowly turn the primary pressure relief valve 120 and observe the high pressure and control pressure reading.

First the high pressure will increase on test point 40 and at the same time the control pressure on test point 43 (to about 1/2 of the high pressure).

PREVIEW - YOUFIXTHIS.COM

Download full manual at youfixthis.com

SUB GROUP INDEX

4.03	Technical Data DEUTZ Diesel Engine BF 4 L 913	A / R 900 Litronic / 101
4.04	Technical Data DEUTZ Diesel Engine BF 4 M 1013 E	A / R 900 Litronic / 4001
4.05	Technical Data LIEBHERR Diesel Engine D 904 - D 914 / D 906 - D 916	A / R 902 Litronic / 101 A 902 Industrie / 3046 A / R 912 Litronic / 101 A / R 922 Litronic / 101 A / R 932 Litronic / 101 R 942 Litronic / 101
4.06	Technical Data LIEBHERR Diesel Engine D 924 E / D 926 E	A 902 Litronic / 5001 R 902 Litronic / 4001 A 902 Industrie / 5001 A 912 Litronic / 5001 R 912 Litronic / 4001 A 922 Litronic / 5001 R 922 Litronic / 4001 A 932 Litronic / 5001 R 932 Litronic / 4001 R 942 Litronic / 4001
4.10	Engine Speed Adjustment	A / R 902 Litronic / 101 A / R 912 Litronic / 101 A / R 922 Litronic / 101 A / R 932 Litronic / 101 R 942 Litronic / 101
4.20	Sensor controlled low idle automatic (special installation)	A / R 900 - R 942 Litronic

PREVIEW - YOUFIXTHIS.COM

Download full manual at youfixthis.com

SUB GROUP INDEX

11.32	**Two Speed Gear Box 2 AVG 105**	A 912 Litronic / from 101
11.35	**Two Speed Gear Box 2 HL 100**	A 900 Litronic / from 101 A 902 Litronic / from 101 A 912 Litronic / from 2001 A 922 Litronic / from 101 A 932 Litronic / from 101
11.36	**Two Speed Gear Box 2 HL 100**	A 900 Litronic / from 1016 A 902 Litronic / from 2642 A 902 Industrie / from 3046 A 912 Litronic / from 3004 A 922 Litronic / from 330 A 932 Litronic / from 3001
11.50	**Gear Box Control**	A 900 Litronic / from 101 A 902 Litronic / from 101 A 902 Industrie / from 3046 A 912 Litronic / from 2001 A 922 Litronic / from 101 A 932 Litronic / from 101

PREVIEW - YOUFIXTHIS.COM

Download full manual at youfixthis.com

SUB - GROUP - INDEX

12.58	**Steering Axle ZP with disk brake**	A 900 Litronic Type 367 from 101 A 902 Litronic Type 356 from 101
12.60	**Steering Axle ZP with disk brake**	A 902 Litronic Type 357 from 101 A 902 Industrie Type 583 from 3046 A 902 Litronic Type 356 from 5001 A 912 Litronic Type 358 / 359 from 101 A 912 Litronic Type 403 / 404 from 101 A 912 Litronic Type 418 / 419 / 420 from 2001 A 922 Litronic Type 421 / 497 from 101 A 932 Litronic Type 360 from 101
12.64	**Steering Axle Kessler with disk brake**	A 932 Litronic Type 360 from 505 A 932 Litronic Type 361 from 503
12.68	**Rigid Axle ZP with disk brake**	A 900 Litronic Type 367 from 101 A 902 Litronic Type 356 from 101
12.69	**Rigid Axle ZP with drum brake**	A 900 Litronic Type 367 from 993 A 902 Litronic Type 356 from 2607
12.70	**Rigid Axle ZP with disk brake**	A 902 Litronic Type 357 from 101 A 902 Industrie Type 583 from 3046 A 902 Litronic Typ 356 from 5001 A 912 Litronic Type 358 / 359 from 101 A 912 Litronic Type 403 / 404 from 101 A 912 Litronic Type 418 / 419 / 420 from 2001 A 922 Litronic Type 421 / 497 from 101 A 932 Litronic Type 360 from 101
12.74	**Rigid Axle ZP with disk brake**	A 932 Litronic Type 360 from 505 A 932 Litronic Type 361 from 503
12.78	**Differential ZP**	A 900 Litronic Type 367 from 101 A 902 Litronic Type 356 from 101
12.80	**Differential ZP**	A 902 Litronic Type 357 from 101 A 902 Industrie Type 583 from 3046 A 902 Litronic Typ 356 from 5001 A 912 Litronic Type 358 / 359 from 101 A 912 Litronic Type 403 / 404 from 101 A 912 Litronic Type 418 / 419 / 420 from 2001 A 922 Litronic Type 421 / 497 from 101 A 932 Litronic Type 360 from 101
12.84	**Differential Kessler**	A 932 Litronic Type 360 from 505 A 932 Litronic Type 361 from 503

PREVIEW - YOUFIXTHIS.COM

Download full manual at youfixthis.com

SUB GROUP INDEX

15.02	**General Data and Operating Pressures**	A 912 Litronic / from 101
15.03	**General Data and Operating Pressures**	A 900 Litronic / from 101 A 902 Litronic / from 101 A 902 Industrie / from 3046 A 912 Litronic / from 2001 A 922 Litronic / from 101 A 932 Litronic / from 101
15.10	**Hydraulic Brake System**	A 912 Litronic / from 101
15.12	**Hydraulic Brake System**	A 900 Litronic / from 101 A 902 Litronic / from 101 A 902 Industrie / from 3046 A 912 Litronic / from 2001 A 922 Litronic / from 101 A 932 Litronic / from 101
15.20	**Compact Brake Block**	A 912 Litronic / from 101
15.22	**Compact Brake Block**	A 900 Litronic / from 101 A 902 Litronic / from 101 A 902 Industrie / from 3046 A 912 Litronic / from 2001 A 922 Litronic / from 101 A 932 Litronic / from 101

PREVIEW - YOUFIXTHIS.COM

Download full manual at youfixthis.com

SUB GROUP INDEX

Litronic

3.02	**Technical Data**	A 900 Litronic / 101
3.04	**Technical Data**	A 902 Litronic / 101
3.06	**Technical Data**	A 912 Litronic / 101 A 922 Litronic / 101
3.08	**Technical Data**	A 932 Litronic / 101
3.12	**Maintenance Guidelines**	A 900 Litronic / 101
3.14	**Maintenance Guidelines**	A 902 Litronic / 101
3.16	**Maintenance Guidelines**	A 912 Litronic / 101 A 922 Litronic / 101
3.18	**Maintenance Guidelines**	A 932 Litronic / 101

Industrie

3.29	**Technical Data**	A 902 Industrie / from 3046
3.39	**Maintenance Guidelines**	A 902 Industrie / from 3046

PREVIEW - YOUFIXTHIS.COM

Download full manual at youfixthis.com

PREVIEW ONLY

You're viewing 7 of 1806 pages

The full manual includes:

- All 1806 pages, complete
- Searchable PDF (find any keyword)
- No watermarks
- Instant download
- Print-ready quality

GET FULL MANUAL NOW

Liebherr A 900, A 902, A 912, A 922, A 932 Litronic Service Manual

Scan or click anywhere
youfixthis.com

Click anywhere on this page to get the full manual