en

Service Manual

Hydraulic Excavator

A 900 C - A 924 C Litronic EDC

PREVIEW YOUFIXTHIS.COM

1 Document identification

Order no.:	10216479
Edition:	09 / 2004
Update no. 1:	01 / 2005
Update no. 2:	05 / 2006
Update no. 3:	09 / 2006
Update no. 4:	04 / 2007
Last update:	09 / 2010

2 Product identification

Type: A 900 C - A 924 C Litronic EDC



Download full manual at youfixthis.com

SUBGROUP - INDEX

Section	Group	Type
Changes and modifications to series	1.02.1	A 900 C-LI EDC 24677- A 904 C-LI EDC 30580- A 914 C-LI 35112- A 924 C-LI 34519-
Safety instructions	1.10.1	A 914 C-LI A 924 C-LI
Tightening torques (WN 4037 K)	1.20.1	A 900 C-LI EDC A 904 C-LI EDC A 914 C-LI A 924 C-LI
Tightening torques	1.21.1	A 914 C-LI A 924 C-LI
Assembly instruction for hydraulilc cylinder WN 4121 C	1.22.1	A 900 C-LI EDC A 904 C-LI EDC A 914 C-LI A 924 C-LI
Assembly instruction for hydraulic cylinder WN 4122 B	1.24.1	A 900 C-LI EDC A 904 C-LI EDC A 914 C-LI A 924 C-LI
Tightening torques for piston rod bearing screws	1.25.1	A 900 C-LI EDC A 904 C-LI EDC A 914 C-LI A 924 C-LI
Angle-controlled screw tightening	1.30.1	A 904 C-LI EDC A 924 C-LI
Filling quantities	1.40.1	A 900 C-LI EDC A 904 C-LI EDC A 914 C-LI A 924 C-LI

PREVIEW - YOUFIXTHIS.COM

LHB/en/Edition: 11/2010

SUBGROUP - INDEX

Section	Group	Type
Special tools - general information	2.01.1	A 900 C-LI EDC A 914 C-LI A 924 C-LI
Special tools for diesel engines	2.02.1	A 914 C-LI A 924 C-LI
Special tools for hydraulic systems	2.05.1	A 914 C-LI A 924 C-LI
Special tools for electrical equipment	2.06.1	A 914 C-LI A 924 C-LI
Special tools for gears	2.07.1	A 914 C-LI A 924 C-LI
Special tools for axles (ZF)	2.08.1	A 900 C-LI EDC A 904 C-LI EDC A 914 C-LI A 924 C-LI
Special tools for axles (Kessler)	2.09.1	A 924 C-LI 34519-
Assembly tools for hydraulic cylinders	2.12.1	A 914 C-LI 35112- A 924 C-LI 34519-
Mounting device for piston rod bearings	2.13.1	A 914 C-LI A 924 C-LI
Slotted nut wrench for slewing gear mechanism	2.14.1	A 914 C-LI A 924 C-LI
Mounting device for multi-disk brake	2.15.1	A 914 C-LI A 924 C-LI

PREVIEW - YOUFIXTHIS.COM

LHB/en/Edition: 11/2010

SUBGROUP - INDEX

Section	Group	Type
Type overview A 904 C LI	3.05.1	A 904 C-LI EDC 30580-
Type overview A 914 C LI	3.06.1	A 914 C-LI 35112- A 924 C-LI 34519-
Technical data A 900 C LI	3.11.1	A 900 C-LI EDC 24677-
Technical data A 904 C LI	3.15.1	A 904 C-LI EDC 30580-
Technical data A 914 C LI	3.16.1	A 914 C-LI 35112-
Technical data A 924 C LI	3.17.1	A 924 C-LI 34519-
Technical data A 924 C HD LI	3.18.1	A 924 C-LI 34519-
Inspection and maintenance schedule	3.21.1	A 900 C-LI EDC 24677-
Inspection and maintenance schedule	3.25.1	A 904 C-LI EDC 30580-
Inspection and maintenance schedule	3.27.1	A 914 C-LI 35112- A 924 C-LI 34519-
Lubricating charts	3.30.1	A 900 C-LI EDC 24677- A 904 C-LI EDC 30580- A 914 C-LI 35112- A 924 C-LI 34519-
Adjustment protocol V4.3 A 900 C LI	3.41.1	A 900 C-LI EDC 24677-
Adjustment protocol V4.4 A 900 C LI	3.42.1	A 900 C-LI EDC 29092-
Adjustment protocol V4.7 A 900 C LI	3.43.1	A 900 C-LI EDC 37762-
Adjustment protocol V4.7 A 900 C LI	3.44.1	A 900 C-LI EDC 39762-
Adjustment protocol V4.8 A 900 C LI	3.45.1	A 900 C-LI EDC 47104-
Adjustment protocol V4.4 A 904 C LI	3.47.1	A 904 C-LI EDC 30580-
Adjustment protocol V4.7 A 904 C LI	3.48.1	A 904 C-LI EDC 37774-

PREVIEW - YOUFIXTHIS.COM

LHB/en/Edition: 11/2010

SUBGROUP - INDEX

Section	Group	Type
Bleeding the fuel system	4.05.1	A 900 C-LI EDC 24677- A 904 C-LI EDC 30580- A 914 C-LI 35112- A 924 C-LI 34519-
Technical data of diesel engines	4.12.1	A 900 C-LI EDC 24677- A 904 C-LI EDC 30580-
Technical data of diesel engines	4.13.1	A 914 C-LI 35112- A 924 C-LI 34519-
Installation and check list	4.25.1	A 900 C-LI EDC A 904 C-LI EDC A 914 C-LI A 924 C-LI
Liebherr diesel particle filter accessory kit	4.27.1	A 900 C-LI EDC A 904 C-LI EDC A 914 C-LI A 924 C-LI
Datalogger version 2.3.00	4.40.1	A 900 C-LI EDC 31354- A 904 C-LI EDC A 914 C-LI A 924 C-LI
Datalogger software version 2.3.09	4.41.1	A 900 C-LI EDC 52566- A 904 C-LI EDC 52566- A 914 C-LI 52566- A 924 C-LI 52566-

PREVIEW - YOUFIXTHIS.COM

LHB/en/Edition: 11/2010

SUBGROUP - INDEX

Section	Group	Type
Coupling	5.10.1	A 900 C-LI EDC 24677- A 904 C-LI EDC 30580- A 914 C-LI 35112- A 924 C-LI 34519-
Pump distributor gear	5.20.1	A 914 C-LI 35112- A 924 C-LI 34519-

PREVIEW - YOUFIXTHIS.COM

LHB/en/Edition: 11/2010

SUBGROUP - INDEX

Section	Group	Type
LSC system	6.01.1	A 900 C-LI EDC 24677- A 904 C-LI EDC 30580-
Grab control	6.10.1	
Layout of hydraulic system	6.21.1	A 900 C-LI EDC 24677- A 904 C-LI EDC 30580-
Layout of hydraulic system	6.22.1	A 914 C-LI 35112- A 924 C-LI 34519-
Hydraulic system A 900 C, from 24677	6.31.1	A 900 C-LI EDC 24677-
Hydraulic system A 904 C, from 30580	6.34.1	A 904 C-LI EDC 30580-
Hydraulic system A 904 C, from 35343	6.35.1	A 904 C-LI EDC 35343-
Hydraulic system A 904 C, from 39333	6.36.1	A 904 C-LI EDC 39333-
Hydraulic system A 914/A924 C, from 34519	6.40.1	A 914 C-LI 35112- A 924 C-LI 34519-
Hydraulic system A 914/A924 C, from 49928	6.41.1	A 914 C-LI 50108- A 924 C-LI 49928-

PREVIEW - YOUFIXTHIS.COM

LHB/en/Edition: 11/2010

SUBGROUP - INDEX

Section	Group	Type
Hydraulic pumps - dismantling, installation and initial operation	7.01.1	A 900 C-LI EDC 24677- A 904 C-LI EDC 30580- A 914 C-LI 35112- A 924 C-LI 34519-
Variable-displacement pump DPVO 165	7.05.1	A 900 C-LI EDC 24677-
DPVO 165 variable-displacement pump	7.06.1	A 900 C-LI EDC 39762-
DPVP 108 double variable-displacement pump	7.07.1	A 904 C-LI EDC 30580- A 914 C-LI 35112- A 924 C-LI 34519-
FMF hydraulic fixed displacement motor	7.20.1	A 900 C-LI EDC 24677- A 904 C-LI EDC 30580- A 914 C-LI 35112- A 924 C-LI 34519-
HMF 75-02P hydraulic fixed-displacement motor	7.22.1	A 914 C-LI 35112- A 924 C-LI 34519-
DMVA regulating motor (travel drive)	7.27.1	A 900 C-LI EDC 24677- A 904 C-LI EDC 30580- A 914 C-LI 35112- A 924 C-LI 34519-
DMVA regulating motor (travel drive)	7.28.1	A 900 C-LI EDC 48070- A 904 C-LI EDC 51328- A 914 C-LI 51833- A 924 C-LI 51833-
Hydraulic cylinder	7.30.1	A 900 C-LI EDC 24677- A 904 C-LI EDC 30580- A 914 C-LI 35112- A 924 C-LI 34519-
Extension and retraction times of hydraulic cylinders	7.31.1	A 900 C-LI EDC 24677- A 904 C-LI EDC 30580- A 914 C-LI A 924 C-LI

PREVIEW - YOUFIXTHIS.COM

LHB/en/Edition: 11/2010

SUBGROUP - INDEX

Section	Group	Type
Overview of electrical symbols	8.01.1	A 914 C-LI 35112- A 924 C-LI 34519-
Notes regarding the electrical system	8.02.1	A 900 C-LI EDC A 904 C-LI EDC A 914 C-LI A 924 C-LI
Arrangement of components	8.12.1	A 900 C-LI EDC 24677- A 904 C-LI EDC 30580-
Arrangement of components	8.14.1	A 914 C-LI 35112- A 924 C-LI 34519-
Electrical system (construction model)	8.34/E3.1	A 900 C-LI EDC 24677- A 904 C-LI EDC 30580-
Electrical system (industrial model)	8.38/E3.1	A 904 C-LI EDC 30713-
Electrical system (construction model)	8.40/E3.1	A 914 C-LI 35112- A 924 C-LI 34520-
Electrical system (industrial model)	8.42/E3.1	A 924 C-LI 34520-
Operating symbols on the operator's platform	8.44.1	A 914 C-LI 35112- A 924 C-LI 34519-
BST excavator control (version 2.. or V5..)	8.70.1	A 914 C-LI 35112- A 924 C-LI 34519-
Monitoring display from version 4.4/4.5/4.6	8.73.1	A 900 C-LI EDC 24677- A 904 C-LI EDC 30580- A 914 C-LI 35112- A 924 C-LI 34519-
Monitoring display from version 4.7	8.74.1	A 900 C-LI EDC 40418- A 904 C-LI EDC 40418- A 914 C-LI 40418- A 924 C-LI 40418-

PREVIEW - YOUFIXTHIS.COM

SUBGROUP - INDEX

Section	Group	Type
Slewing gear mechanism	9.10.1	A 914 C-LI 35112- A 924 C-LI 34519-
Slewing gear brake	9.21.1	A 900 C-LI EDC 24677- A 904 C-LI EDC 30580- A 914 C-LI 35112- A 924 C-LI 34519-
Positioning slewing brake	9.25.1	A 900 C-LI EDC 24677- A 904 C-LI EDC 30580- A 914 C-LI 35112- A 924 C-LI 34519-

PREVIEW - YOUFIXTHIS.COM

LHB/en/Edition: 11/2010

SUBGROUP - INDEX

Section	Group	Type
Slewing ring	10.10.1	A 914 C-LI 35112- A 924 C-LI 34519-

PREVIEW - YOUFIXTHIS.COM

SUBGROUP - INDEX

Section	Group	Type
2 HL 290 transmission	11.12.1	A 900 C-LI EDC 24677- A 904 C-LI EDC 30580- A 914 C-LI 35112- A 924 C-LI 34519-
HBGV block for transmission 2 HL 290	11.35.1	A 900 C-LI EDC 24677- A 904 C-LI EDC 30580- A 914 C-LI 35112- A 924 C-LI 34519-

PREVIEW - YOUFIXTHIS.COM

LHB/en/Edition: 11/2010

SUBGROUP - INDEX

Section	Group	Type
Tyres	12.01.1	A 900 C-LI EDC 24677- A 904 C-LI EDC 30580- A 914 C-LI 35112- A 924 C-LI 34519-
Use of special tool (Kessler axles)	12.03.1	A 924 C-LI 34519-
Steering drive axle LT 71	12.07.1	A 924 C-LI 34519-
Rigid axle D 71	12.08.1	A 924 C-LI 34519-
MS-E 3060 steering axle	12.40.1	A 900 C-LI EDC 24677- A 904 C-LI EDC 50160-
MT-E 3060 rigid axle	12.42.1	A 900 C-LI EDC 24677- A 904 C-LI EDC 50160-
MS/MT-E 3060 input unit and differential	12.44.1	A 900 C-LI EDC 24677- A 904 C-LI EDC 50160-
MS-E 3070 steering axle	12.50.1	A 904 C-LI EDC 30580- A 914 C-LI 35112- A 924 C-LI 34519-
MT-E 3070 rigid axle	12.52.1	A 904 C-LI EDC 30580- A 914 C-LI 35112- A 924 C-LI 34519-
MS/MT-E 3070 input unit and differential	12.54.1	A 904 C-LI EDC 30580- A 914 C-LI 35112- A 924 C-LI 34519-

PREVIEW - YOUFIXTHIS.COM

LHB/en/Edition: 11/2010

SUBGROUP - INDEX

Section	Group	Type
Hydraulic steering system	13.10.1	A 914 C-LI 35112- A 924 C-LI 34519-
Four-wheel steering	13.15.1	A 924 C-LI 34519-
Joystick steering	13.18.1	A 924 C-LI 34519-
Servostat	13.20.1	A 900 C-LI EDC 24677-24965
Steering valve	13.25.1	A 900 C-LI EDC 24677- A 914 C-LI 35112- A 924 C-LI 34519-
Steering cylinder	13.31.1	A 900 C-LI EDC 24677-
Steering cylinder	13.33.1	A 914 C-LI 35112- A 924 C-LI 34519-

PREVIEW - YOUFIXTHIS.COM

LHB/en/Edition: 11/2010

SUBGROUP - INDEX

Section	Group	Type
Oscillating axle support with automatic control	14.10.1	A 914 C-LI 35112- A 924 C-LI 34519-
Support cylinder	14.20.1	A 914 C-LI 35112- A 924 C-LI 34519-

PREVIEW - YOUFIXTHIS.COM

SUBGROUP - INDEX

Section	Group	Type
Operating pressures of the brake system	15.05.1	A 914 C-LI 35112- A 924 C-LI 34519-
Hydraulic brake system	15.10.1	A 914 C-LI 35112- A 924 C-LI 34519-
Compact brake block	15.20.1	A 914 C-LI 35112- A 924 C-LI 34519-

PREVIEW - YOUFIXTHIS.COM

LHB/en/Edition: 11/2010

SUBGROUP - INDEX

Section	Group	Type
Pipe fracture safety valve for stick cylinder	16.02.1	A 900 C-LI EDC 24677- A 904 C-LI EDC 30580-
Pipe fracture safety valve for boom cylinders	16.03.1	A 900 C-LI EDC 24677- A 904 C-LI EDC 30580-
Pipe fracture safety valve for boom cylinders	16.04.1	A 914 C-LI 35112- A 924 C-LI 34519-
Pipe fracture safety unit for stick cylinder	16.05.1	A 914 C-LI 35112- A 924 C-LI 34519-
Overload warning system	16.06.1	A 900 C-LI EDC 24677- A 904 C-LI EDC 30580- A 914 C-LI 35112- A 924 C-LI 34519-
Switchable overload warning system	16.08.1	A 900 C-LI EDC 24677- A 904 C-LI EDC 30580- A 914 C-LI 35112- A 924 C-LI 34519-
Tool management	16.10.1	A 900 C-LI EDC A 904 C-LI EDC A 914 C-LI A 924 C-LI
Camera monitoring system	16.14.1	A 900 C-LI EDC 24677- A 904 C-LI EDC 30580- A 914 C-LI 35112- A 924 C-LI 34519-
Hydraulic quick change adapter	16.15.1	A 900 C-LI EDC 24677- A 904 C-LI EDC 30580- A 914 C-LI 35112- A 924 C-LI 34519-
Boom cylinder protection system	16.16.1	A 900 C-LI EDC 24677- A 904 C-LI EDC 30580- A 914 C-LI 35112- A 924 C-LI 34519-

PREVIEW - YOUFIXTHIS.COM

SUBGROUP - INDEX

Section	Group	Type
Auxiliary heater	17.30.1	A 900 C-ZW EDC A 914 C-LI A 924 C-LI
Inspection and repair instructions for heating and air-conditioning system	17.40.1	A 900 C-ZW EDC A 904 C-LI EDC A 914 C-LI A 924 C-LI
Heating and air-conditioning system	17.50.1	A 900 C-ZW EDC A 914 C-LI A 924 C-LI

PREVIEW - YOUFIXTHIS.COM

LHB/en/Edition: 11/2010

SUBGROUP - INDEX

Section	Group	Type
Fixture of operator's cab elevation system	18.01.1	A 904 C-LI EDC A 924 C-LI
Repair instructions for lubrication hoses	18.50.1	A 900 C-LI EDC A 904 C-LI EDC A 914 C-LI A 924 C-LI
Central lubrication system	18.51.1	A 900 C-LI EDC A 904 C-LI EDC A 914 C-LI A 924 C-LI
Semi-automatic central lubrication system	18.53.1	A 900 C-LI EDC A 904 C-LI EDC A 914 C-LI A 924 C-LI
Fully automatic central lubricating system	18.54.1	A 900 C-LI EDC A 904 C-LI EDC A 914 C-LI A 924 C-LI
Central lubrication pump	18.56.1	A 900 C-LI EDC A 904 C-LI EDC A 914 C-LI A 924 C-LI
SX-E progressive distributor	18.58.1	A 900 C-LI EDC A 904 C-LI EDC A 914 C-LI A 924 C-LI
MX-F progressive distributor	18.59.1	A 900 C-LI EDC A 904 C-LI EDC A 914 C-LI A 924 C-LI

PREVIEW - YOUFIXTHIS.COM

LHB/en/Edition: 11/2010

General Information 1

Tools 2

Technical Data / Maintenance Guidelines 3

Engine 4

Clutch / Splitterbox 5

Hydraulic System 6

Hydraulic Components 7

Electrical System 8

Swing Gear 9

Swing ring 10

Two Speed Gear Box 11

Axles / Gear Box 12

Steering 13

Oscillating Axle Stabilizer 14

Brake system 15

Special Attachments / Accessory Kits 16

Cab Heater / Air Conditioning System 17

Undercarriage / Uppercarriage / Attachments 18

PREVIEW - YOUFIXTHIS.COM

Download full manual at youfixthis.com

Tab. 16 *Setting data*

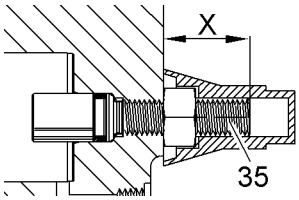

Fig. 36 *Stop screw (threaded stud) of the swivel yoke for minimum pivot angle*

The minimum pivot angle is limited by the threaded stud **35**, see Fig. 35. The angle is factory-set by the manufacturer and may not be changed.

The correct position of the threaded stud **35** can be used as a reference point by measuring the dimension **X**, see Fig. 36 and Tab. 17.

11.3 Adjustment of the maximum output speed/maximum travel speed

Check / adjustment	Unit	Setting	Location of adjustment	Measuring point
Universal joint shaft speed in A 900 C				
Standard machine				
Forward travel	rpm	1680 $^{\pm 25}$	160.1.1	-
Reverse travel	rpm	1680 $^{\pm 25}$	160.2.1	-
Speeder machine				
Forward travel	rpm	2520 $^{\pm 25}$	160.1.1	-
Reverse travel	rpm	2520 $^{\pm 25}$	160.2.1	-
Checking measurement Y				
Standard machine	mm	11	-	160.1
Speeder machine	mm	14	-	160.2
Universal joint shaft speed in A 904 C				
Tyre size 10.00-20: (20 km/h)				
Standard machine				
Forward travel	rpm	1680 $^{\pm 25}$	160.1.1	-
Reverse travel	rpm	1680 $^{\pm 25}$	160.2.1	-
Tyre size 11.00-20: (20 km/h)				
Standard machine				
Forward travel	rpm	1550 $^{\pm 25}$	160.1.1	-
Reverse travel	rpm	1550 $^{\pm 25}$	160.2.1	-
Tyre size 10.00-20: (30 km/h)				
Speeder machine				

PREVIEW - YOUFIXTHIS.COM

Hydraulic double plunger cylinder

1 Design

The LIEBHERR double plunger cylinder is used as a working cylinder to move the ditch cleaning / swivel bucket.

The hydraulic cylinder consists of the following main components:
– The cylinders **20** inserted in the ditch cleaning / swivel bucket **10.**
– The piston rod **8** connected through the swivel bearing **70** to the bearing block **60.**

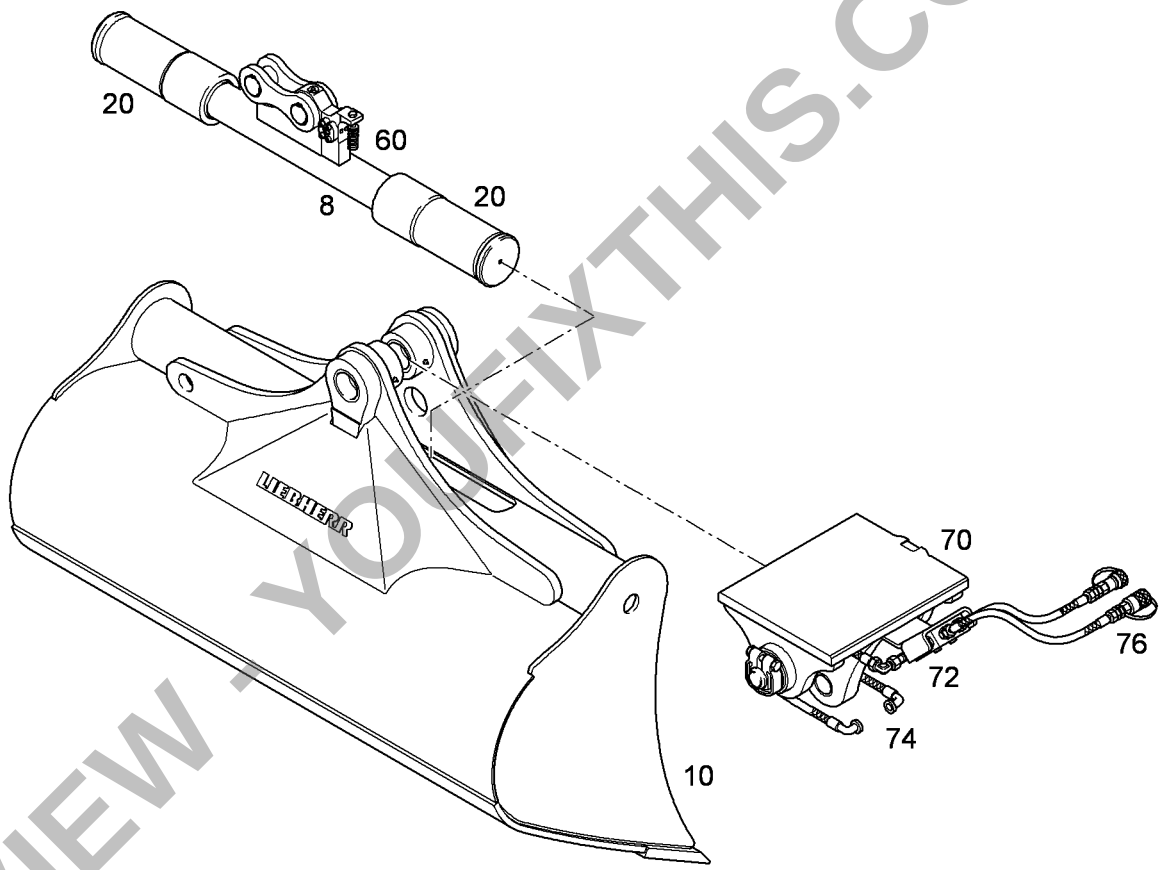

Fig. 1 *Hydraulic double plunger cylinder in a ditch cleaning bucket*

8 Piston rod
10 Ditch cleaning / swivel bucket
20 Cylinder
60 Bearing block
70 Swivel bearing
72 Double check valve
74 Hydr. connections from AS1 control block
76 Hydr. connections to bearing block

The pressure chambers are sealed with Zurcon seal rings in the cylinders **20**. The scraper ring in the cylinder **20** protects the piston rod **8** against dirt. The guide rings **50** guide the piston rod **8** during movement. For more details regarding the sealing elements, see Fig. 4.

Hydraulic oil is fed to the right side of the piston rod **8**, pushing the cylinder to the right and swivelling the bucket to the right. Hydraulic oil is fed to the left side of the piston rod **8**, pushing the cylinder to the left and swivelling the bucket to the left.

The velocity and the force of the extending cylinder (at constant oil flow and pressure) are the same

PREVIEW - YOUFIXTHIS.COM

Service level			Software version			Menu options displayed after the "Menu" button in the main screen has been pressed	A 900 C A 904 C
Operator	Mechanic	Inspector	BBT/DISP V4.4/4.4		**Menu Line**	**Purpose and content Information**	**Machine-specific settings**
					i - I/O	**Information:** Electrical inputs and outputs, status of hydraulic pumps, signal inputs	
●	●	●	🖫		Page 1/8	EV1: Current to Y51, △P reduction, pump flow reduction EV1 display 0 - 1 A	
						EV6: Current to Y414, ToolControl pressure settings display 0 - 1 A	
●	●	●	🖫		Page 2/8	LR: Current to Y50, power control of pumps display 0 - 1 A	
●	●	●	🖫		Page 3/8	EV5: Current to Y347, hydraulic fan control display 0 - 1 A	
●	●	●	🖫		Page 4/8	EV3: Current to Y451, sensitivity of slewing gear display 0 - 1 A	
					Page 5/8	Status of electrical inputs: ❑ = not active, ■ = active	
●	●	●	🖫		B19L	Sensor in handle of left joystick	
●	●	●	🖫		B19R	Sensor in handle of right joystick	
●	●	●	🖫		B40	Sensor at left travelling pedal (track models) or speed pedal (wheel models)	
●	●	●	🖫		B41	Sensor at right travelling pedal (track models)	
●	●	●	🖫		B266	Sensor for automatic oscillating axle locking: ❑ = brake applied ■ = brake released	
●	●	●	🖫		B53	Inductive pickup for slewing gear speed (from model 934)	
●	●	●	🖫		S57	Switch for semiautomatic slewing gear brake	
●	●	●	🖫		X1/23	not assigned	
●	●	●	🖫		X1/24	not assigned	
●	●	●	🖫		B12	Inductive pickup of motor speed: ■ = frequency is read	
●	●	●	🖫		service	Dongle at X30 / X32 to ESP01: ❑ = not plugged in ■ = plugged in	
●	●	●	🖫		S25	Pressure switch in pilot control circuit: ❑ = not actuated (standby mode) ■ = actuated	
●	●	●	🖫		Y20	Magnetic clutch of a/c compressor (display of fan speed)	
●	●	●	🖫		M4/time	Windscreen wiper interval	
●	●	●	🖫		B19/time	Afterrun time for idle automatic	

PREVIEW ONLY FIXTHIS.COM

3 Design of input unit 1 and differential 2

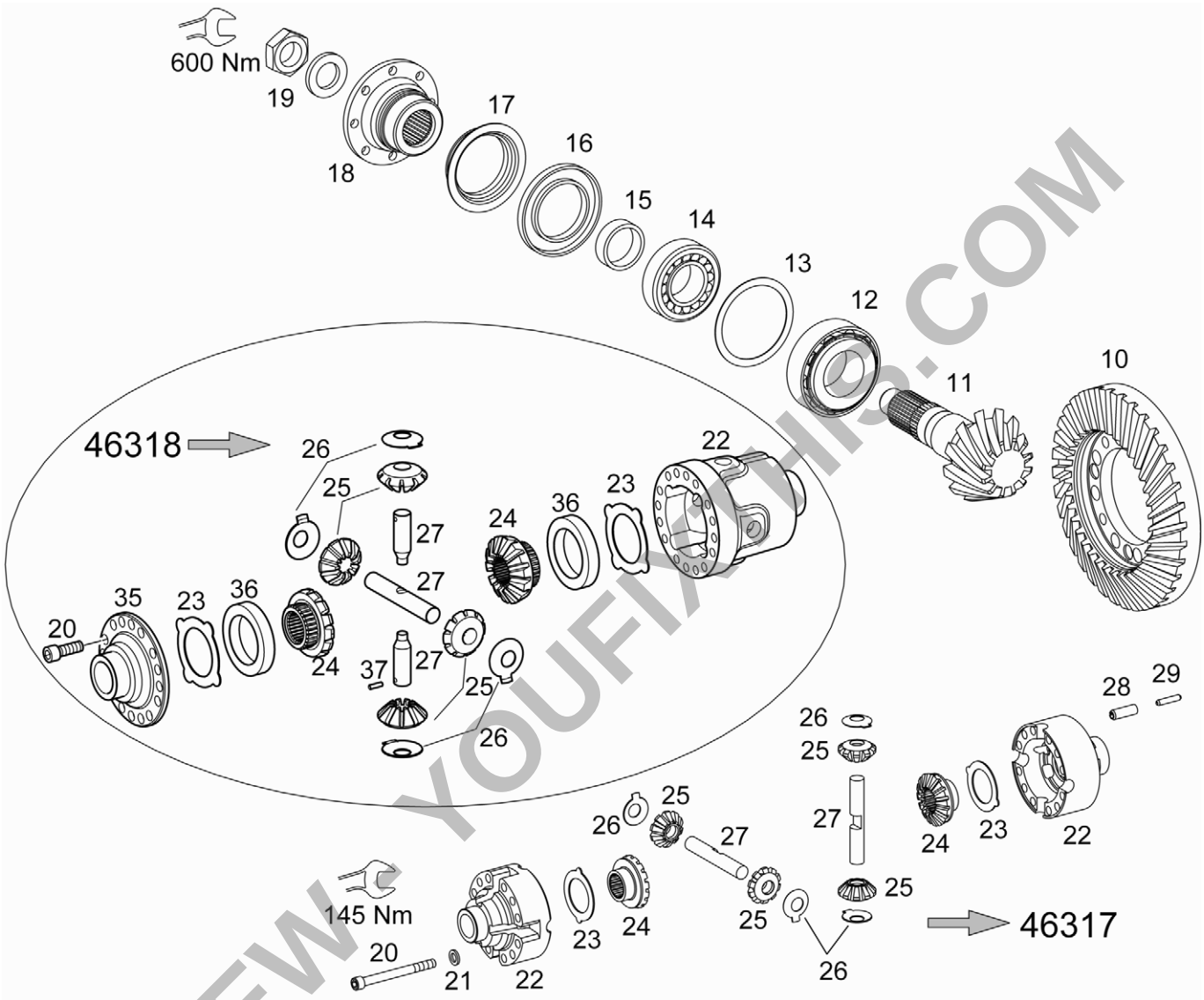

Fig. 2 Design of the input unit

10	Crown wheel	**22**	Differential cage
11	Pinion	**23**	Thrust washer
12	Roller bearing	**24**	Axle shaft gear
13	Disc (S=0.70-1.50mm)	**25**	Balancing gear
14	Roller bearing	**26**	Thrust washer
15	Ring (S=10.94-12.38mm)	**27**	Balancing axle
16	Shaft seal	**28**	Heavy-duty roll pin
17	Protective plate	**29**	Roll pin
18	Input flange	**35**	Lid
19	Hex nut with washer	**36**	Balancing ring
20	Allen head screw	**37**	Roll pin
21	Washer		

PREVIEW YOUFIXTHIS.COM

8 Electrical system

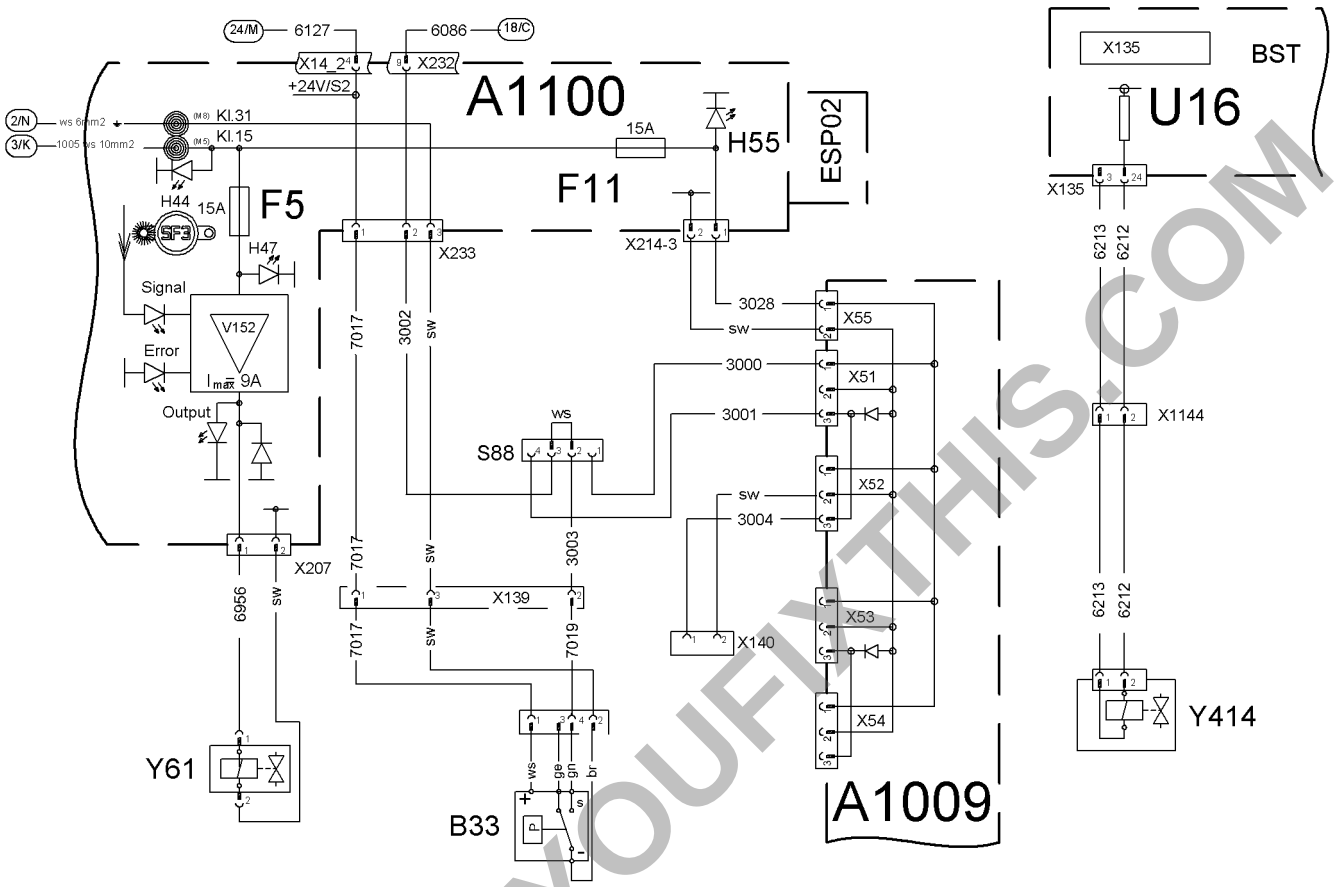

Fig. 12 *Electric diagram of Tool Control*

A1009 Decay diode board
A1100 Printed circuit board ESP02
B33 Pressure switch / flow limitation
F5 A1100 fuse (15A)
F11 A1100 fuse X214-3
H44 LED: power supply class 15
H47 LED: power supply SF2,SF3,SF4
H55 LED power supply X214-3
S88 Plug / 4-pin to switch
U16 Excavator control system BST
V152 Amplifier (A1100) SF3 kit
X14-2 Plug connection on A1100 / 5-pin
X51 Plug connection on A1009 / 3-pin
X52 Plug connection on A1009 / 3-pin
X53 Plug connection on A1009 / 3-pin
X54 Plug connection on A1009 / 3-pin
X55 Plug connection on A1009 / 3-pin
X135 BST plug / 40-pin
X139 Plug connection to CS B33 / 3-pin
X140 Plug connection to CS revolving deck / 2-pin
X207 Plug connection on A1100 for SF3 / 2-pin
X214-3 Plug connection on A1100 / 2-pin
X232 Plug connection on A1100 / 10-pin
X233 Plug connection on A1100 to B33 / 3-pin
Y61 Solenoid valve (only AHS12)
Y414 Prop.solenoid valve / pressure limitation
X1144 Plug connection / 2-pin

PREVIEW - YOUFIXTHIS.COM

PREVIEW ONLY

You're viewing 25 of 3168 pages

The full manual includes:

- All 3168 pages, complete
- Searchable PDF (find any keyword)
- No watermarks
- Instant download
- Print-ready quality

GET FULL MANUAL NOW

Liebherr A 900 C, A 904 C, A 914 C, A 924 C Litronic EDC Service Manual



Scan or click anywhere
youfixthis.com

Click anywhere on this page to get the full manual