INTRODUCTION

This manual has been issued to provide you with technical information on design, function, disassembly, assembly, adjustments and troubleshooting of components and assemblies on the LIEBHERR wheel loader.

The descriptions are brief but precise, with photographs, drawings, electric and hydraulic circuit schematics and graphic diagrams. This information is intended to simplify any necessary repair work on the LIEBHERR wheel loader.

We deliberately avoided full photographic details of each repair stage, since only skilled mechanics, already familiar with most repair work, should perform these repairs. This manual also contains information about adjustments and adjustment values.

Instructions on regular care and maintenance is excluded from this manual since they are covered in the individual Operations and Maintenance Manuals.

Observe all Accident Prevention Guidelines before any maintenance and repair on the wheel loader. To perform repairs listed in this manual, a complete set of standard tools as well as special tools and fixtures shown and listed in this manual are necessary. It is essential to keep all equipments, tools and working areas clean and tidy.

No special emphasis is put on replacing sealing components such as 0-rings, gaskets etc., since it is taken for granted that all removed seals, 0-rings and gaskets are replaced during the course of repair. Unless specific values are given, all threaded connections should be tightened according to the torque charts.

Working with a wheel loader can be dangerous, it could result in injury or death if proper precautions are not taken! **WE URGE YOU TO READ THIS MANUAL CAREFULLY!** The safety information is provided to operators and maintenance mechanics to ensure the safe operation and maintenance of the wheel loader. It is essential that you read and familiarize yourself with this information, which explains safety requirements and precautions and specific hazards of which you should be aware. Careful adherence to these safety guidelines will permit safe operation and maintenance and potentially prevent personal injury to yourself and others, and possible damage to the wheel loader.

Important safety notes such as **DANGER** and **WARNING** are used throughout this manual to emphasize important or critical instructions, they are defined as follows:

DANGER for persons: Denotes an extreme intrinsic hazard which could result in a high probability of death or serious injury if proper precautions are not taken.

WARNING for machine: Denotes a reminder of safety practices or directs attention to unsafe practices if proper precautions are not taken, also IMPORTANT operation and maintenance procedures which could result in damage or destruction of the machine or any of its components if not observed.

This Service Manual is issued by the Customer Service Department at **LIEBHERR-WERK BISCHOFSHOFEN GES.MBH , Service Training Center" .** No part of this publication may be reproduced or copied in any form without authorization.
All rights reserved - Printed in Austria.
Updates will only be sent to registered Liebherr Service Manual owners. Manuals, which are not registered, are not updated. Service Information Bulletins might also serve as updates. We hope that with this information contained in this manual and your cooperation we have taken another step towards improved service for LIEBHERR wheel loaders.
We reserve the right to change and modify the technical data as compared with the information and illustrations contained in this manual.

LIEBHERR-WERK BISCHOFSHOFEN GES.MBH
Puplished: **09 / 87**
Id. No.: **8719 106**

Download full manual at youfixthis.com
PREVIEW - YOUFIXTHIS.COM

Installation preload F_M and tightening torques M_A per DIN 13 part 13, wrench sizes of hex head screws per DIN 931, socket head screws per DIN 912.

Beginning with grade 10.9, the use of lock washers does no longer provide safety.

For special screws, such as Durlock or Tensilock, the tightening torques of the manufacturer should be observed.

When using impact wrenches, care must be taken so that the torque values are not exceeded. (Tightness must be checked with a torque wrench).

PREVIEW - YOUFIXTHIS.COM

Blurred on purpose. The manual you buy has this page in full quality.

Download full manual at youfixthis.com

1. Introduction:

The purpose of showing and explaining graphic symbols is to simplify troubleshooting, analysis and service of the hydraulic and pneumatic circuit.

Symbols show connections, flow paths and function of components represented. They do not indicate, with some exceptions, conditions occurring during transition from one flow path arrangement to another. Symbols do not indicate construction, size, pressures or other component values. Symbols do not indicate the actual location of ports, the direction in which the spools are shifted, or the position of control elements on actual components. Symbols may be rotated or reversed

PREVIEW - YOUFIXTHIS.COM

Blurred on purpose. The manual you buy has this page in full quality.

Download full manual at youfixthis.com

LUBRICANTS AND OPERATING FLUIDS

It is very important to observe the guidelines given for lubrication, level check and change of operating fluids, as this increases reliability and service life of the machine.

It is especially important to perform the various oil changes regularly and in the stated intervals, and to use the same quality of lubricants are noted.

CAUTION

When checking or changing operating fluids, you must also observe the following guidelines:

- **If not otherwise noted, make sure the machine is parked on level ground of sufficient load carrying capacity when working on the machine, and that the engine is turned off.**
- **Carefully secure all covers and doors before working in the engine area, to prevent them from falling or closing inadvertently.**
- **The engine must be turned off before refueling.**
- **Do not smoke and make sure there are no open flames when refueling.**

Cleanliness is of utmost importance when changing engine oil, gear oil or hydraulic oil. Before removing fittings or plugs, make sure the clean them and the surrounding area carefully.

When changing the oil, make sure to clean filler and drain plugs.

NOTE:

Catch the used oil in a suitable container and dispose of it properly in an environmentally sound manner, along with the filter elements.

PREVIEW - YOUFIXTHIS.COM

Download full manual at youfixthis.com

PREVIEW - YOUFIXTHIS.COM

Download full manual at youfixthis.com

Description of dimension and norms of nuts and bolts:

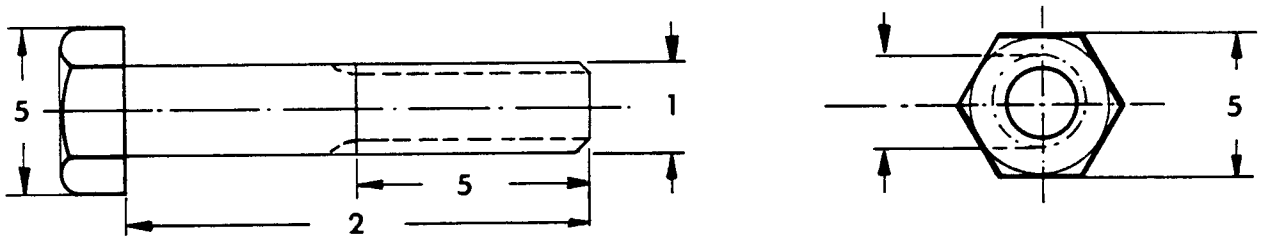

EXAMPLE: HEX BOLT

M 12 X (1 X) 60 10.9 DIN 931

1 *6 2 3 4 5

1 = Bolt Size

2 = Bolt Length

3 = Grade (hardness) of Bolt

4 = Abbreviation for (Deutsches Institute fuer Normung)

5 = NORM (standard) This DIN number is used to standardize the type, weight, grade and dimension of the bolt.

* 6 = Thread pitch - usually given on bolts with fine metric thread.

The following DIN numbers are most commonly used on Liebherr excavators:

A. DIN 912 = ALLEN HEAD BOLT - partially threaded - see Figure 1

B. DIN 931 = HEX HEAD BOLT - partially threaded - see Figure 2

C. DIN 933 = HEX HEAD BOLT - shaft totally threaded - see Figure 3

D. DIN 934 = HEX NUT

E. DIN 935 = CASTLE NUT

F. DIN 939 = STUD (various shapes)

G. DIN 960 = HEX HEAD BOLT - fine metric thread - same as "B".

H. DIN 961 = HEX HEAD BOLT - fine metric thread - same as "C".

I. DIN 7984 = ALLEN HEAD BOLT - with low ALLEN HEAD BOLT - same as "A".

FIGURE 1 FIGURE 2 FIGURE 3

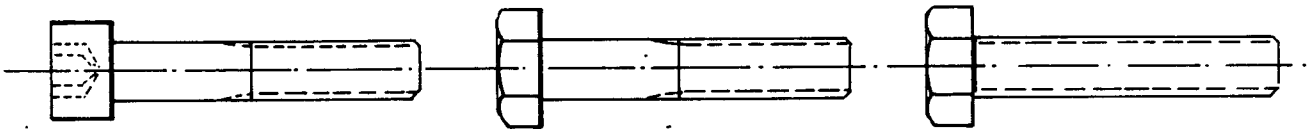

NOTE: The wrench sizes for the various bolt sizes are listed on the reverse side of this page.

PREVIEW - YOUFIXTHIS.COM

Download full manual at youfixthis.com

Benennung / Description / Dénomination

Meßstutzen

Gauge adapter

Embout

Nr. *No* *Nr.*	*Größe* *Size* *Grandeur*	*Id. Nr.* *Order- Nr.* *Nr. Code*	*Gerät* *Model* *Type*
30	10 L	7619 042	

Darstellung / Representation / Figure

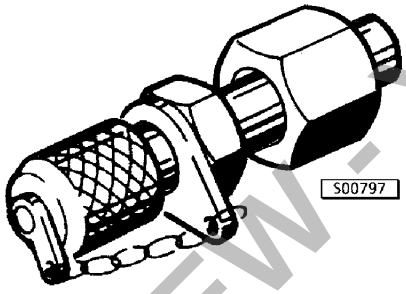

Anwendung / Application / Application

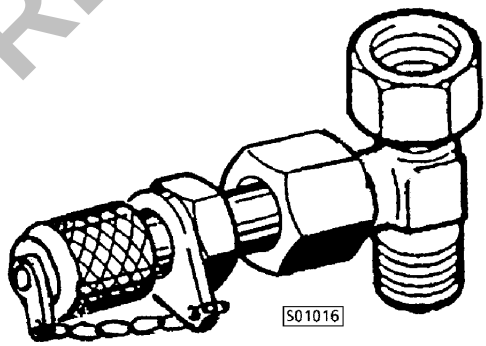

Benennung / Description / Dénomination

Verschraubung für Meßstutzen

Threaded union for gauge adapter

Vissage pour embout

Nr. *No* *Nr.*	*Größe* *Size* *Grandeur*	*Id. Nr.* *Order- Nr.* *Nr. Code*	*Gerät* *Model* *Type*
31	10 L	7403 571	
32	15 L	7404 419	
33	10 / 15 L	7616 915	

Darstellung / Representation / Figure

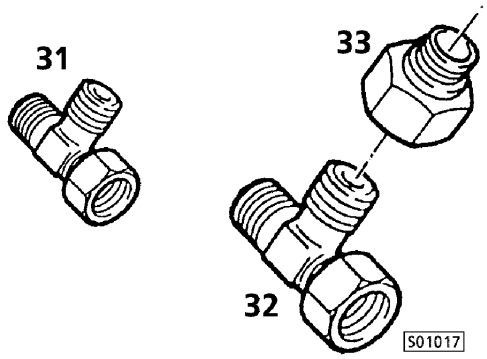

Anwendung / Application / Application

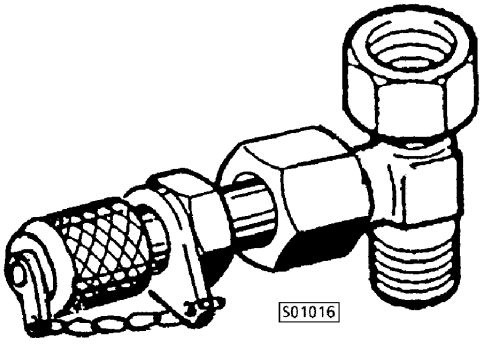

PREVIEW - YOUFIXTHIS.COM

Download full manual at youfixthis.com

Benennung / Description / Dénomination

Federhaken

Spring hook

Crochets à ressorts

Nr. *No* *Nr.*	*Größe* *Size* *Grandeur*	*Id. Nr.* *Order- Nr.* *Nr. Code*	*Gerät* *Model* *Type*
5	5870 281 034	8145 767	AP 407, AP 409 AP 411, AP 415 AP 417, AP 420

Darstellung / Representation / Figure

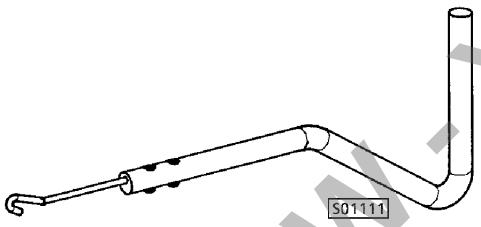

Anwendung / Application / Application

Federhaken zum Aus- und Einhaken der Rückzugfedern im Hohlradträger / Bremskolben

Spring hook to unhook and engage the return springs in the internal gear carrier / brake piston

Crochets à ressorts pour accrochage et de'crochage des ressorts de rappel dans le porte - couronne / piston de frein

Benennung / Description / Dénomination

Schlupfbuchse ø 260 mm

Installer inner ø 260 mm

Douille de glissement Diam. int ø 260 mm

Nr. *No* *Nr.*	*Größe* *Size* *Grandeur*	*Id. Nr.* *Order- Nr.* *Nr. Code*	*Gerät* *Model* *Type*
7	5870 651 042	7017 559	AP 407, AP 409 AP 411

Darstellung / Representation / Figure

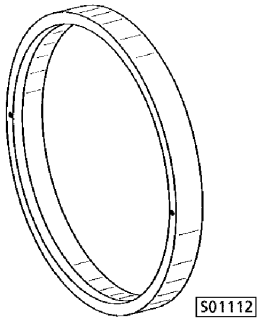

Anwendung / Application / Application

Schlupfbuchse zum Einsetzen des Kolbens in den Hohlradträger

Installer to install the piston into the internal gear carrier

Douille de glissement pour insertion du piston dans le porte - couronne

PREVIEW - YOUFIXTHIS.COM

Download full manual at youfixthis.com

Maintenance / Inspections							WORK TO BE PERFORMED	Adjustmt. values / Qty.	See Manual
at delivery	every 8-10	every 10-50	every 250	at 500,1500,...	at 1000,3000,...	at 2000,4000,...			
							ELECTRICAL SYSTEM		
○	○	○	○	○	○	○	Indicator lights and head lights - check		OM / SM
○				○	○	○	Batteries – acid level , terminals - check		OM
○					○	○	Function of system and components - check		OM / SM
							HEATER / VENTILATION		
○				○	○	○	System for function and leaks - check		OM / SM
							Fresh air filter - replace – if necessary		OM
							POWERSHIFT TRANSMISSION		
○	○	○	○	○	○	○	Oil level - check		OM / SM
○				○	○	○	Seals / fittings - check for leaks		OM / SM
○					○	○	Function of control and control pressure - check		SM
					○	○	Gear mounting, oil motor and gear shafts - check		SM
○		○	○	○	○	○	Lube points drive shaft - check / grease		OM
				○	○	○	Filter insert - replace		OM / SM
				□	○	○	Gear oil - change [1]	5.0 l	OM / SM
							AXLES		
○				○	○	○	Oil level and leaks - check		OM / SM
					○	○	Mounting of axles - check		OM / SM
○		□	□	○	○	○	Mounting of wheel nuts (□ check also at 100 hours) [2]	650 Nm	OM / SM
				□	○	○	Gear oil / Differential – front - change [1]	15.0 l	OM
				□	○	○	Gear oil / Differential – rear - change [1]	7.5 l	OM
				□	○	○	Gear oil / wheel hubs – front / rear - change [1]	4.0 l/4.0 l	OM
							STEERING		
○	○	○	○	○	○	○	Function and leaks - check		SM
○		○	○	○	○	○	Bearing and lube points of steering cylinder - check / grease		OM / SM
○			○	○	○	○	Flow indicator and emergency steering pump for function - check		OM / SM
					○	○	Mounting of components and steering cylinder - check		SM
							BRAKES		
○	○	○	○	○	○	○	Operating and parking brake - check for function		OM / SM
○				○	○	○	Leaks in system - check		SM
○				○	○	○	Control switch for function - check		OM / SM
					○	○	Accumulator, brake and release pressure - check		OM / SM
							MAIN FRAME - CAB		
○		○	○	○	○	○	Bearing and lube points / artic. & oscillating axle -check / lubricate		OM
					○	○	Door, window and cover hinges / locks - check		
					○	○	Front and rear section for cracks - check		
							LIFT ARMS - ATTACHMENTS		
○		○	○	○	○	○	Bearing and lube points - check / grease		OM
○				○	○	○	Bucket return / lift limit / float position - check for function		OM / SM
				○	○	○	Lift arms and bucket stops - check		OM / SM
					○	○	Lift arms and buckets for cracks - check		
○				○	○	○	Proper application of attachments - inform the operator		OM
							GENERAL		
○							Have the operator lubricate the machine, explain and check for proper operation and maintenance.		OM
	○						Daily maintenance by the operator includes visual inspection for leaks and defects: • Check engine, hydraulic system, gear and axles for leaks.		

1) For lubrication and operating fluid specification, see " Lubricants and Operating Fluids "
2) In addition, maintenance intervals marked with □ must also be completed any time the wheels are changed.

PREVIEW - YOUFIXTHIS.COM

Download full manual at youfixthis.com

8.05	**Liebherr Engine**	D 904 NA	L 511 from 101
		D 904 TB	L 521 from 101
		D 904 T	L 531 from 501
8.06	**Liebherr Engine**	D 906 TB	L 541 501
8.10	**Deutz Engine**	BF 6 L 913	L 531 / 101 - 285
			L 541 / 101 - 240
8.20	**Solenoid / Engine shut off**		L 531 from 1389
			L 541 from 1827
8.30	**Clutch**		

PREVIEW - YOUFIXTHIS.COM

Download full manual at youfixthis.com

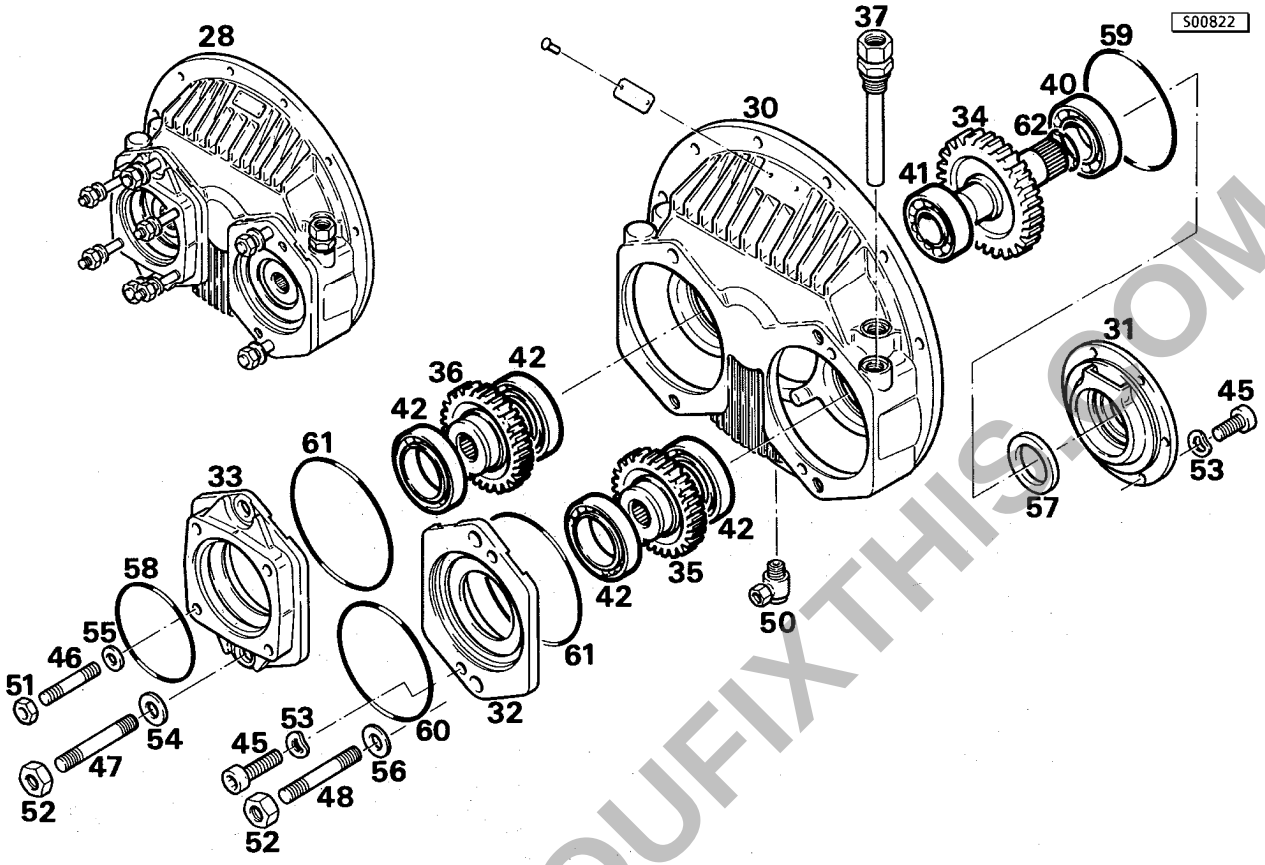

28	Pump distributor gear compl.	48	Stud bolt
30	Gear housing	50	Union connection
31	Bearing flange	51	Hex nut
32	Bearing flange	52	Hex nut
33	Bearing flange	53	Lock washer
34	Drive shaft	54	Lock washer
35	Gear wheel	55	Washer
36	Gear wheel	56	Washer
37	Oil dipstick pipe	57	Sealing ring
40	Cylindrical roller bearing	58	O-Ring
41	Cylindrical roller bearing	59	O-Ring
42	Groove ball bearing	60	O-Ring
45	Allon head screw	61	O-Ring
46	Stud bolt	62	Snap ring
47	Stud bolt		

PREVIEW - YOUFIXTHIS.COM

Download full manual at youfixthis.com

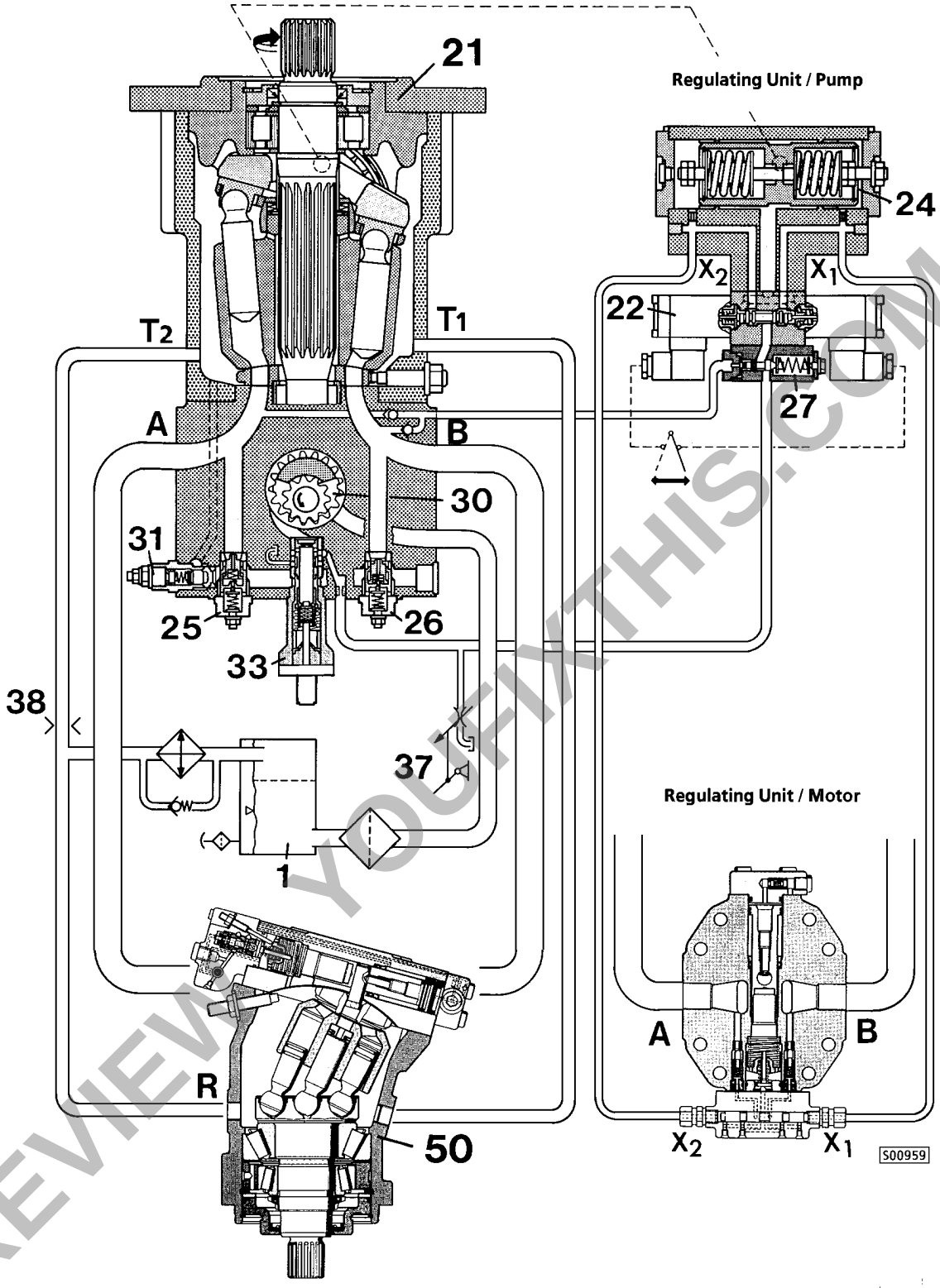

21	Travel pump	**30**	Servo- / replenishing pump
22	Directional solenoid valve	**31**	Replenishing pressure relief valve
24	Regulator cylinder	**33**	Regulator valve
25	Crossover relief valve	**37**	Inching valve
26	Crossover relief valve	**38**	Restrictor
27	Pressure cutoff valve	**50**	Travel motor

PREVIEW YOUFIXTHIS.COM

LIEBHERR	Benennung / Description / Dénomination	Typ / Model / Type: **L 531, L 541**
Datum / Edition / Date: **07.93**	**Travel Hydraulics**	Ab / From / A partir de: **501**
	Download full manual at youfixthis.com	Blatt / Page / Feuille: **10.11.02**

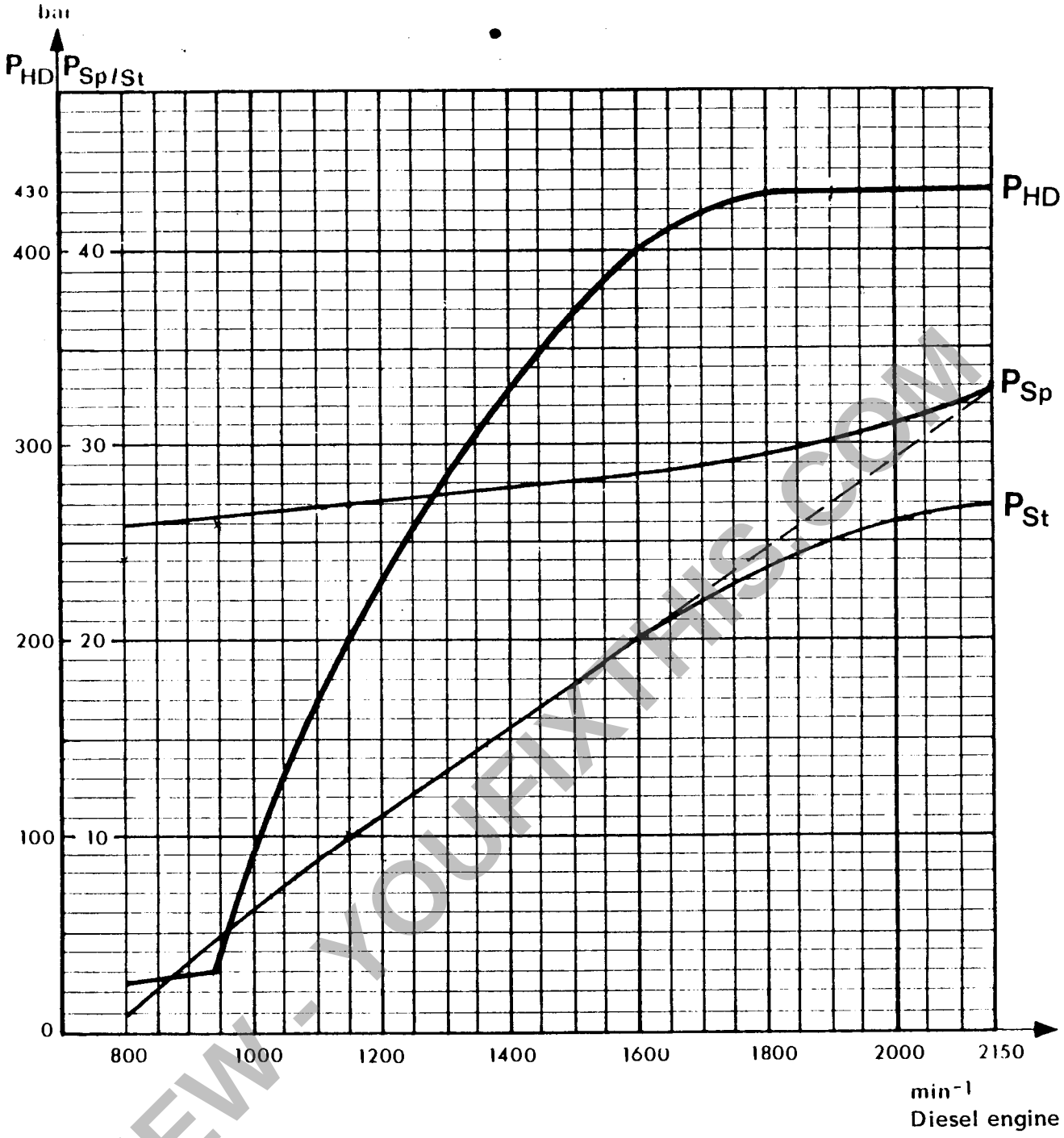

P_{HD} = High pressure
P_{Sp} = Replenishing pressure
P_{St} = Control pressure
P_{Sp} = Replenishing- / Control pressure

	High pressure	Engine RPM	Replenishing pressure	Control pressure
a.*	50	940^{+130}	26^{+3}	5-8
b.	200	1150^{+230}	27^{+3}	10^{+3}
c.	400	1600^{+230}	28^{+3}	20^{+4}
	bar	RPM	bar	bar

*Travel begin

PREVIEW - YOUFIXTHIS.COM

LIEBHERR

Datum Edition Date
06 86

Benennung Description Dénomination

Block Curve
Travel Hydraulics

Download full manual at youfixthis.com

Typ Model Type: L 531, L 541
Ab From A partir de: 501
Blatt Page Feuille: 10.40.02

Pressure checking and adjustment instructions of the working hydraulic

1. Adjusting notes:

1.1. We explicitly indicate that during the warranty period of the machine, any work on the valves should be carried out by authorized LIEBHERR mechanics only.

1.2. The adjusting of the valves have to be carried out at operating temperature of the hydraulic oil and at max. RPM of the Diesel Engine (machine blocked).

1.3. For the adjustment only Glycerine filled gauges should be used, with an indication exactitude of 1 % of the maximum scale reading.

1.4. After pressure adjustings, the relief valves have to be sealed against unauthorized adjustings.

⚠ **Attention:**

For the safety of the mechanic during adjusting works, the shovel has to be fully tilted out and lowered to the ground before entering the working area, see picture 13.

Additional, the articulation locking device have to be secured properly, wheels secured by wheel chocks and the parking brake applied.

13

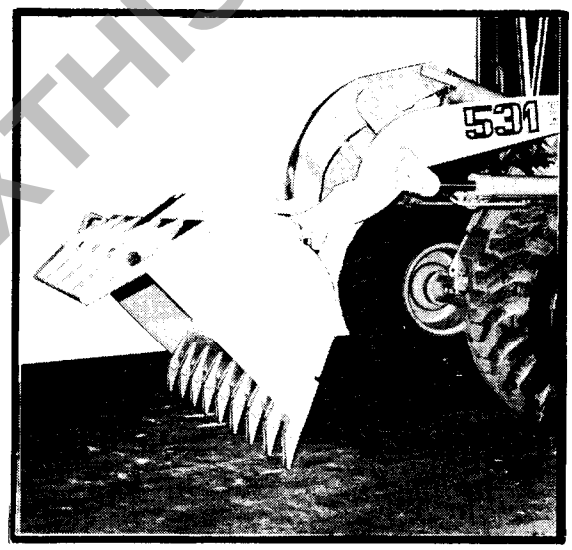

14

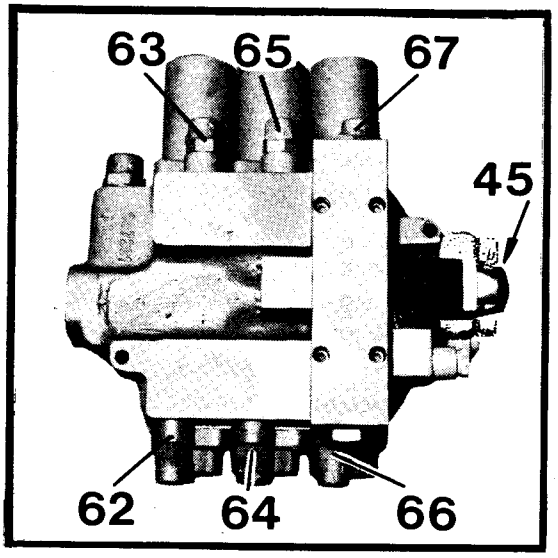

2. **Checking** and adjustment of the secondary relief valves, see picture 14, 15 and 16

Valve 62 (additional cyl. 82 out)
Valve 63 (additional cyl. 82 in)
Valve 64 (tilting cyl. 81 out)
Valve 65 (tilting cyl. 81 in)
Valve 66 (hoist cyl. 80 in)
Valve 67 (hoist cyl. 80 out)

Valve 45 pre-tension (fix adjusted to 17 bar (246 psi)

PREVIEW - YOUFIXTHIS.COM

Download full manual at youfixthis.com

Figure 3



Figure 4

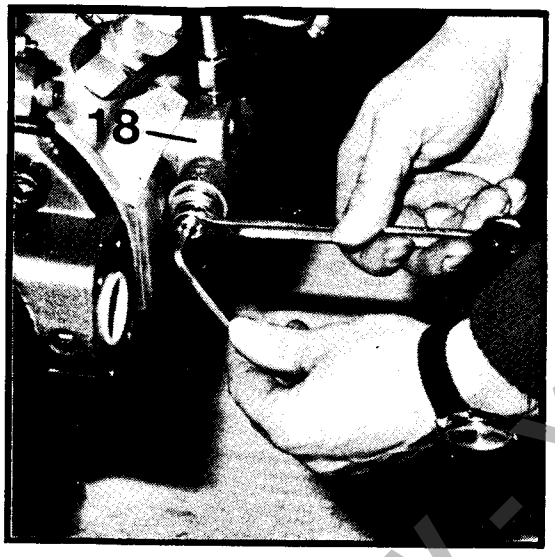

3. Adjustment of power regulator 18

Note:
The regualtor can only be checked with a flow meter and the pump performance diagram, see page 11.38 and 11.39. Connect the flow meter and the pressure gauge.

Actuate the working hydraulics and check the pump performance on serveral points (power curve).

3.1 Adjustment of regulation begin

Loosen locknut SW 27 and turn the adjustment screw, see fig. 3

- to the right to raise regulation begin
- to the left to lower regulation begin

3.2 Adjustment of regulation end

Loosen locknut SW 13 and turn the adjustment screw (threaded pin) see fig.

- to the right to increase flow
- to the left to decrease flow

After correct adjustment, see pump performance diagram on page 11.38 and 11.39, remove the flow meter and pressure gauge.

PREVIEW - YOUFIXTHIS.COM

Download full manual at youfixthis.com

1. Use

The thermostat valve mounted on the expansion pipe in the hydraulic circuit, automatically regulates the hydraulic oil temperature. The regulating element 10 protrudes into the expansion pipe and is exposed to the turn oil from the control valves.

As the hydraulic oil temperature increases, the thermostat valve blocks the oil flow coming from the gear pump and directs the oil flow to the hydraulic oil motor. The hydraulic motor turns a fan blade, which in turn forced air through the hydraulic oil cooler, thus cooling the hydraulic oil.

2. Function and operating principle at temperature up to 40° C (see figure 2)

At temperatures up to 40°C (105° F), the thermostat valve 21 is in the position as shown in figure 2. Hydraulic oil coming from the gear pump flows from connection A to B and is returned via the expansion pipe at almost zero pressure to the tank.

Note:
Due to some return oil pressure, particulary with cold (thick) oil, the fan motor may turn slowly.

3. Function and operating principle at temperatures above 40°C (see fig. 1 and 2).

The regulating element 10 is temperature actuated and works on the expansion / high pressure principle. The expandable substance 10.3, enclosed in a rigid, pressure-resistant container 10.1, melts as the temperature increases. The volume of the substance increases during the melting process and is used to perform work.

Figure 1

Proportional to the increase in volume of the substance 10.3, the piston 10.2, enclosed in molded rubber 10.4, is pushed outward (see figure 1). The molded rubber insert performs another important function as it protects the moving piston 10.2 from the highly pressurized substance 10.3.

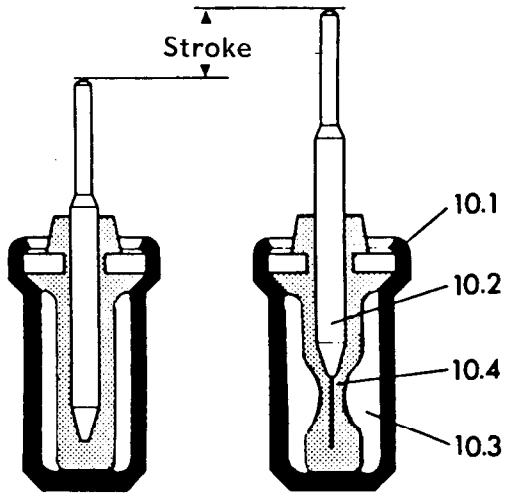

Once the temperature reaches approx. 40° C (105° F), the piston 10.2 is pushed outward and in turn moves the spool 2 against spring pressure 4 (see figure 2). Due to conical shape of the spool 2, the connection between A and B is closed off very gradually, which means the fan motor speed increases as well.

At an oil temperature of approximately 55° C (130° F) and a spool stroke of approximately 8 mm, the thermostat valve is completely closed and the fan motor turns at full RPM. As the oil temperature decreases, the piston 10.2 and the spool 2 are returned to the original position by spring 4.

Warning: **DO NOT heat the regulating element with an open flame or torch !**

PREVIEW - YOUFIXTHIS.COM

Download full manual at youfixthis.com

2. Function and Operating Principle

FIGURE 1

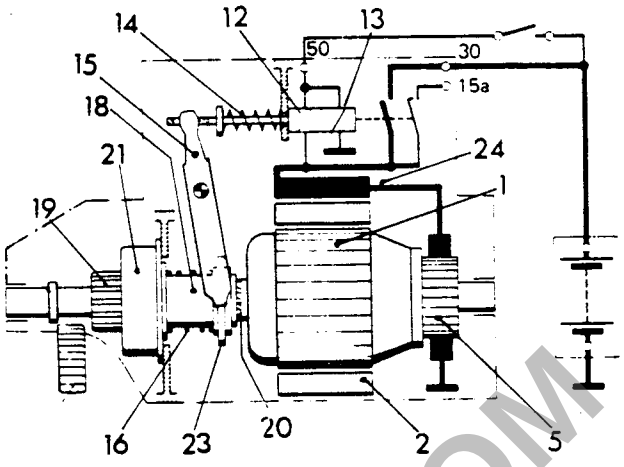

For the construction and internal circuitry of the starter, refer to Figures 1 to 6. The starter is engaged via the attached solenoid II (Figure 6). The protuding pin of the solenoid has a slot in which the shift lever engages with a certain amount of play (free travel). The purpose of this free travel is to permit return spring, 14, in the solenoid to move the armature, by the amount of free travel, toward its initial position when the starter is switched off, so that contact, 8, can lift away from contact, 10 (Figure 6). This is necessary in case the pinion does not clear the flywheel.

The armature shaft, 20, has a "fast" or steep-angle thread on the pinion end (Figures 3 and 6). This carries an actuator, Item 18, which is connected to the pinion via the clutch, 21. The pitch of the thread is cut in such a way that the pinion is held and propelled in towards the flywheel when the armature turns. The actuator carries two guide rings, 23, which are able to slide and in which the fork of the shift lever, 15, engages. The spring, 16, forms a flexible link between the guide ring and the actuator. This ensures that the shift lever always moves to the full limit of its travel and the main starter motor current is switched on even if the pinion gear encounters a tooth on the flywheel. In other words, the shift lever moves the actuator and the pinion forward. At the same time, the pinion is turned and moved forward by the thread until it reaches the limit of its travel. The thread ensures that as soon as the pinion is fully engaged in the flywheel the motor torque is transmitted to the engine.

After the pinion engages, the clutch forms a positive drive link between the starter and the flywheel, which, however, interrupts as soon as the engine speed is higher than the starter speed.

2.1 Pinion engagement

The engagement process is made up of two partial movements of the pinion, the linear thrust movement and the helical or fly-on movement. These two movements act together and are characteristic for this type of starter. However, the starter motor is actuated with the turn of a key.

When the starter switch is turned, the solenoid moves the shift lever, 15, against the force of spring, 14, without the field coil, 24, or armature winding, 1, being fully energized. Therefore, the armature does not turn at this point. Via the guide ring, 23, and meshing spring, 16, the shift lever, 15, pushes actuator, 18, and pinion, 19, against the flywheel in a rotating motion due to the fast thread, 20. If the pinion happens to enter a tooth gap on the flywheel, it engages at the full extent of the shift lever travel, or until the contact bridge, 8, touches the contact, 10. The pinion has completed the full thrust movement.

If the pinion strikes a tooth on the flywheel, the shift lever compresses the meshing spring via axial movement of the guide ring, 23, until the contact bridge reaches the contacts, whereupon the starter motor begins to turn. The pinion is then turned past the face of the flywheel tooth,

PREVIEW - YOUFIXTHIS.COM

Download full manual at youfixthis.com

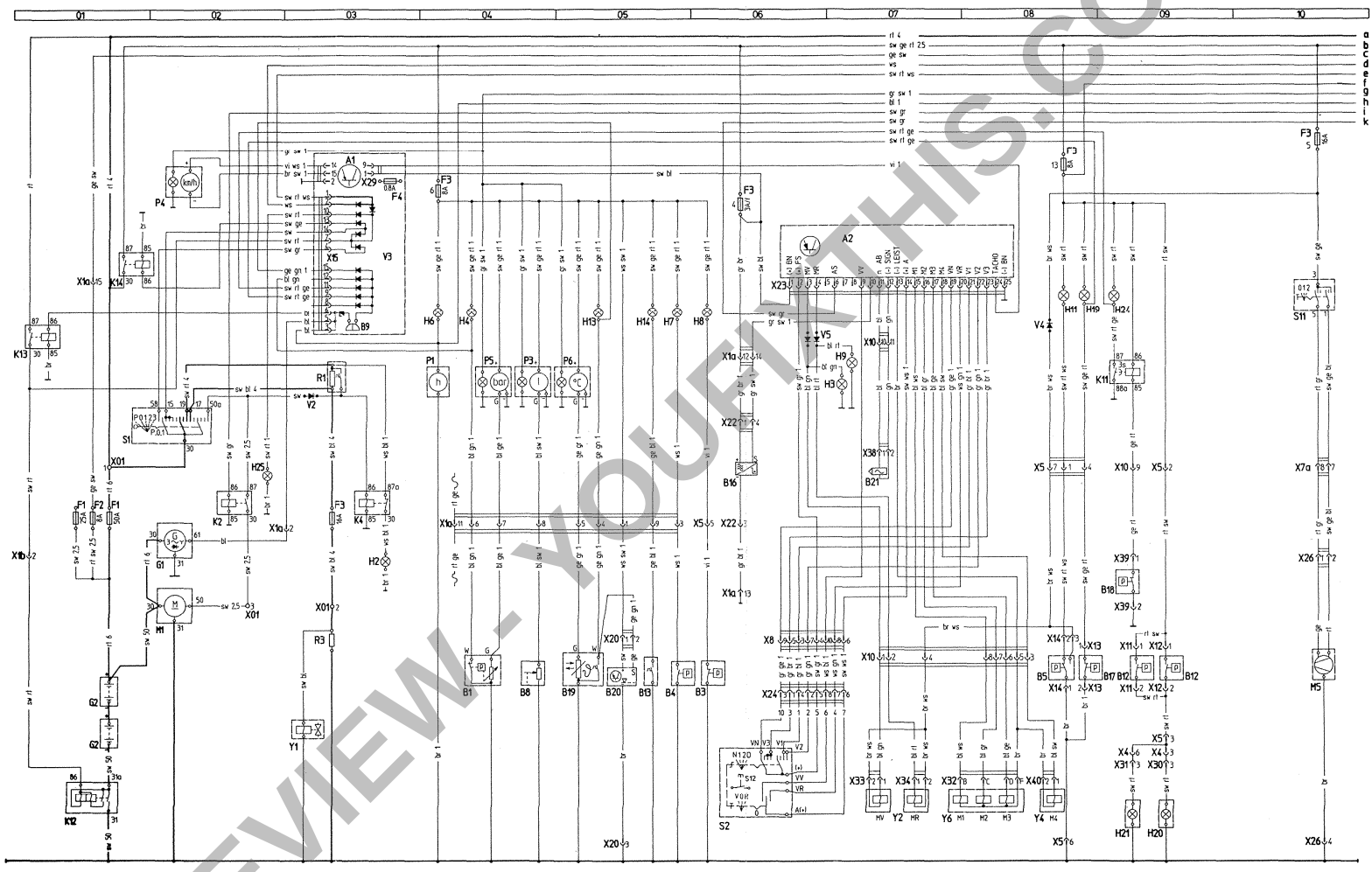

Funktionsschema L531 / L541 Blatt 12.08.25
Gültig ab 0985 - 1388 / 1125 - 1826

sel00253

PREVIEW - YOUFIXTHIS.COM

Download full manual at youfixthis.com

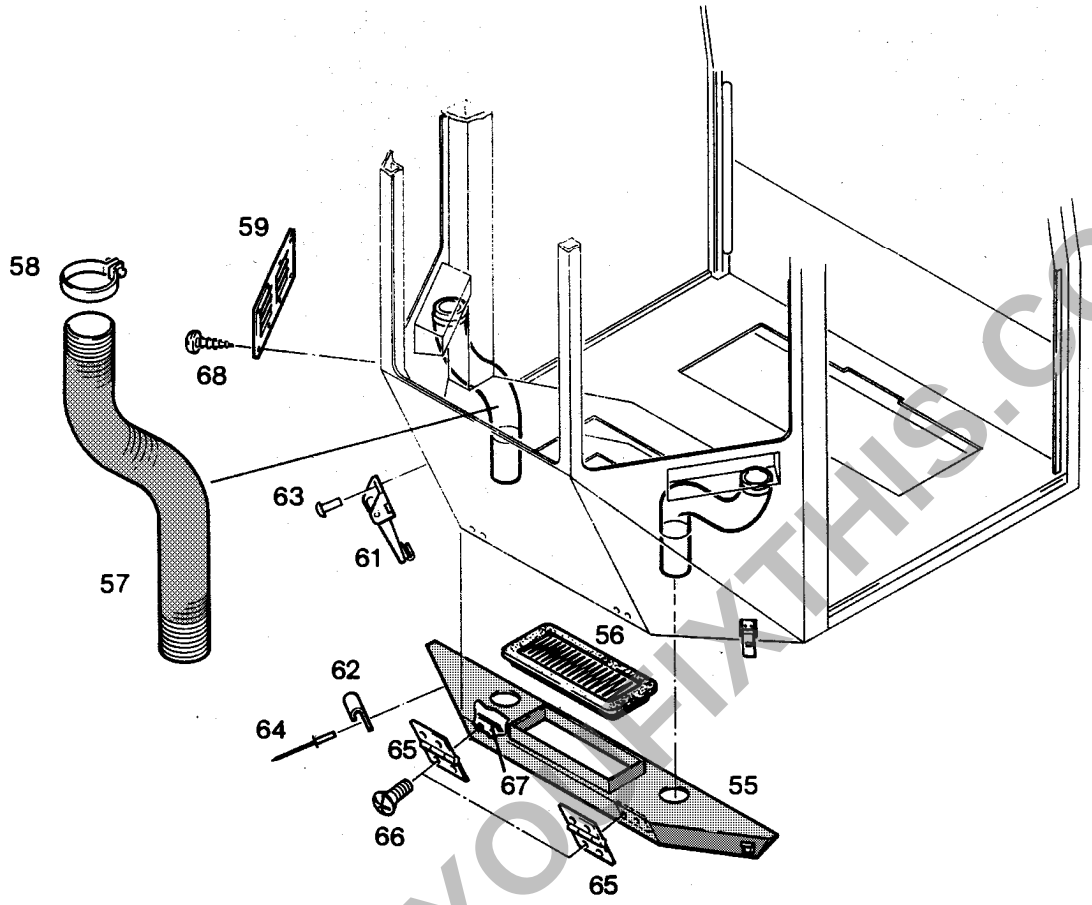

S00165

→274/186

Benennung	Description	Désignation	Pos. Item Pos.	Bestell.-Nr. Order-N° Comm.-Nr.	Menge Quantity Quantité	M E	F N
LUFTANSAUGUNG	AIR BREATHER	ASPIRATION D'AIR	55	9137347	1	0	00
FILTEREINSATZ	FILTER INSERT	CARTOUCHE FILTRANTE	56	7009621	1	0	00
DREIHA SUPERFLEX SCHL.	HEATER HOSE	FLEXIBLE SUPERFL.DREIHA	57	5604104	0,620	4	00
SCHLAUCHSCHELLE	HOSE CLIP	COLLIER	58	7002008	2	0	00
KIEMENLUEFTER	AIR INTAKE	DIFFUSEUR D'AIR	59	5005547	2	0	00
SPANNVERSCHLUSS	FASTENER	FERMETURE A RESSORT DE RAPPEL	61	7009691	2	0	00
GEGENHAKEN	HOOK	CROCHET	62	7009720	2	0	00
NIET	RIVETS	RIVETS	63	7006343	6	0	00
BLINDNIET AVEX	BLIND RIVET	RIVET AVEUGLE	64	7009721	4	0	00
SCHARNIER	HINGE	CHARNIERE	65	7042001	2	0	00
LINSENSCHRAUBE 966 M 5 X 12 4.8 A2E	SCREW	VIS	66	4002009	8	0	00
LEISTE	LEDGE	FIXATION	67	9133921	2	0	00
BLECHSCHRAUBE 7981 B 3,5X 9,5 A2E	SHEFT METAL SCR.	VIS A TOLE	68	4901102	16	0	00

PREVIEW - YOUFIXTHIS.COM

Download full manual at youfixthis.com

8. Gear box - parking brake

As a Safety- and parking brake, a spring actuated, oil pressure released disc brake 42 is installed in the output section of the gear box.

The inside discs connected on the drive shaft 37, and the outside discs connected in the housing 25, are pressed together by the cup springs 43 via pressure piston, if no brake oil pressure is in the system.

The surface friction of the discs creates the braking action over the Cardan shaft to all four wheels.
For function of the complete brake system, see group 17

The parking brake can be released mechanically (for towing) by the relieve screws 44, which are located on the housing of the final drive.

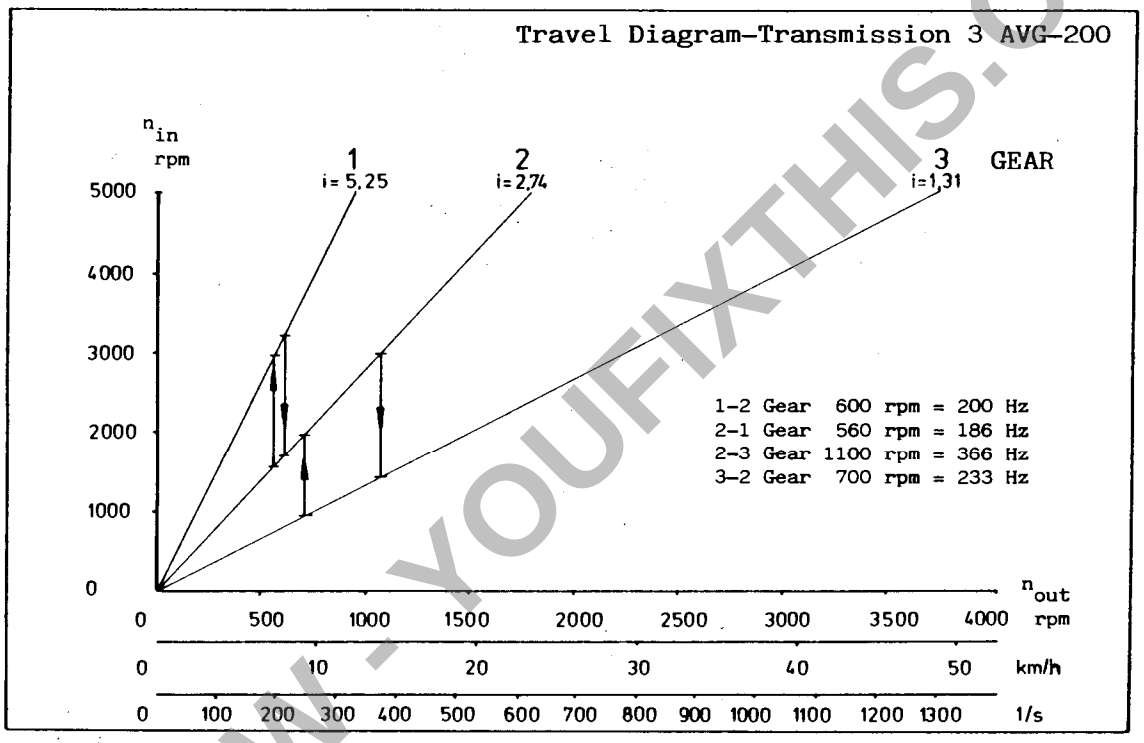

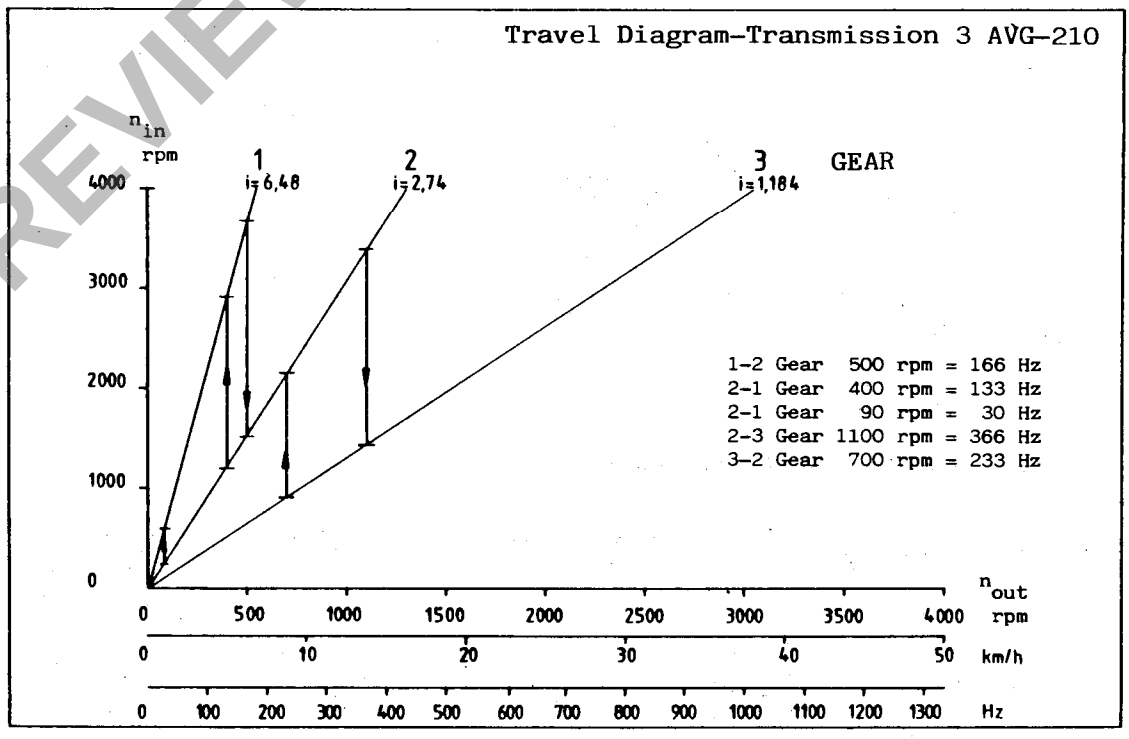

PREVIEW - YOUFIXTHIS.COM

Download full manual at youfixthis.com

15.01	**Axles - General**		
15.10	**Differential**	**L 531 / L 541**	from 101
15.30	**Wheel head**	**L 531 / L 541**	from 101

PREVIEW - YOUFIXTHIS.COM

Download full manual at youfixthis.com

3. **Operating position of the loader:** Loader ist stillstanding
Main pump 10 is working, emergency pump 12 is not working
Steering is in neutral position
Working hydraulic is actuated

See also diagram on page 16.10.05

The main pump 10 is delivering oil to the valve block 20 "connection 1". The pilot flow of the flow divider valve 22 passes without pressure, via valve spool 35 (which is in neutral position) of the servostat 33 to the tank.

The pressure, which is actuated by the working hydraulic, is standing by via check valve 30 on the pilot valve 24 and via "connection P" on the valve piston 42/43 of the servo control valve 40. The emergency pump 12 does not work, which means no oil flow to indicator 26 i.e. closed electr. circuit. The indicator light in the cab is on and shows that the emergency pump 12 is not working.

The hydr. oil in steering cylinders 45, 46, in servostat 33 and servo control valve 40 is locked in.

1	Hydraulic tank
10	Variable display pump
12	Emergency steering pump
20	Valve block
21	Throttle valve
22	Flow divider valve
23	Cut in valve
24	Pilot valve
25	Pressure relief valve
26	Flow indicator
27	Check valve
28	Check valve
29	Check valve
30	Check valve
33	Servostat
34	Hand pump
35	Valve spool
36	Check valve
37	Suction valve
38	Pressure relief valve
40	Servo control valve
41	Check valve
42	Valve spool
43	Valve spool
44	Throttle
45	Steering cylinder left
46	Steering cylinder right
47	Damper
50	Control valve block/working hydraulic

PREVIEW - YOUFIXTHIS.COM

Download full manual at youfixthis.com

3. Disassembly of the Steering Cylinder

3.1 Remove hex head screws 24 and pull the piston rod, complete with piston rod bearing 16 and piston 9 from cylinder 2.

3.2 Remove piston nut 6.5 with special wrench, see fig. 7. Remove piston 9 with special wrench (tools, page no. 4.14.01) from the piston rod 6, see figure 6. Remove the complete piston rod bearing 16 from piston rod 6.

3.3 Release the retaining rings 2.2 / 6.2 and push the ball and socket joint 2.1 / 6.1 from the piston rod 6 and cylinder 2.

4. Assembly of the Steering Cylinder

4.1 **Notes:**
Carfully remove dust, dirt and any foreign matter.
Do not use any sharp tools.
Lightly lubricate all parts and seals before installation.

4.2 Insert retaining rings 2.2 / 6.2 on the side of piston rod 6 and cylinder 2. Insert ball and socket joint 2.1 / 6.1. The opening of the outer ring has to be on the pressure side of the pisotn rod or cylinder 2, see drawing on page 16.50.04. Insert retaining rings 2.2 / 6.2 on the ball and socket joint with notched outer ring, the surfaces marked with "0" have to be located on the same side when installing the cylinder.

4.3 Pull on O-ring 16.2 and spiral ring 16.3. Install the spiral ring pointing away from the presssure side. Insert O-rings 16.5 in the groove. Insert Stepseal rings 16.4 (see fig. 1, 2 and 3), note the installation direction! Lightly lubricate and insert guide rings 16.6. Insert wiper ring 16.1. Push the complete piston rod bearing 16 on piston rod 6.

4.4 Pull O-ring 9.2 and Turcon glyd ring 9.3 on piston 9, using mounting sleeve (see tools, page 4.01), see fig. 4. Compress the Turcon glyd ring 9.3, using the piston ring compressor, see fig. 5.

4.5 Install piston 9 on the piston rod 6 and tighten with special wrench (page 4.14.01), using torque values given on page 16.50.03, see figure 6. Install piston nut 6.5 and tighten with special wrench, using torque values given on page 16.50.03, see figure 7.

4.6 Lubricate piston guide ring 9.1 lightly and insert it. Lightly compress the piston guide rings on the piston, using piston ring compressor, see fig. 5.

4.7 Insert piston rod 6 complete with piston 9 and piston rod bearing 16 into cylinder 2, see figure 8. Remove the piston ring compressor. Install piston rod bearing on clyinder 2 and tighten with screws 24. Be sure that the hydraulic connections are staggered by 90°.

PREVIEW - YOUFIXTHIS.COM

Download full manual at youfixthis.com

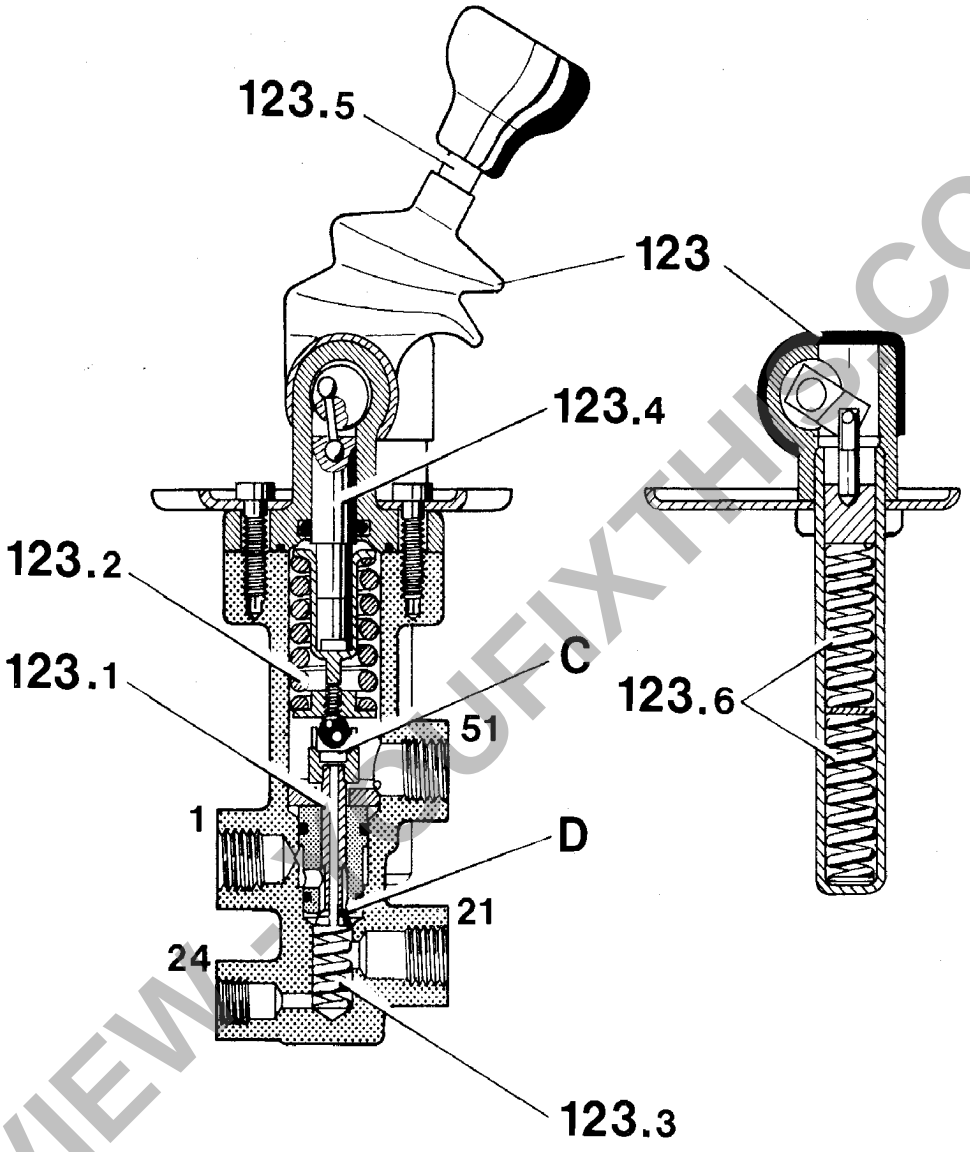

123	Parking brake valve, complete
123.1	Hollow piston
123.2	Spring
123.3	Spring
123.4	Plunger
123.5	Brake lever
123.6	Pressure adjustment shims (if necessary)

PREVIEW - YOUFIXTHIS.COM

Download full manual at youfixthis.com

PREVIEW ONLY

You're viewing 24 of 721 pages

The full manual includes:

- All 721 pages, complete
- Searchable PDF (find any keyword)
- No watermarks
- Instant download
- Print-ready quality

GET FULL MANUAL NOW

Liebherr L511, L521, L531, L541 Service Manual

Scan or click anywhere
youfixthis.com

Click anywhere on this page to get the full manual