SPECIFICATIONS

Engine

Make ..... Isuzu
Model BB-4BG1T

Type: Four stroke, water-cooled, overhead valve, direct injection (electronically controlled), in-line engine with

PREVIEW - YOUFIXTHIS.COM

Blurred on purpose. The manual you buy has this page in full quality.

Download full manual at youfixthis.com

ENGINE

Removal and installation

STEP 1

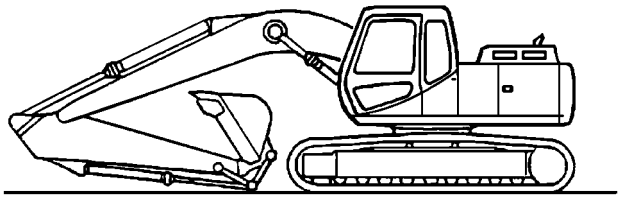

JS00163A1

Park the machine on hard, flat ground. Lower the attachment to the ground.

STEP 2

Release pressure in the hydraulic system and in the hydraulic sump tank (see Section 8000).

STEP 3



JD00375A

Remove the battery cover (1) and disconnect the ground cable (-) (2) from the battery.

STEP 4

Refer to Section 8003 and remove the hydraulic pump.

STEP 5

Refer to Section 2001 and remove the radiator and oil-cleaner assembly.

STEP 6

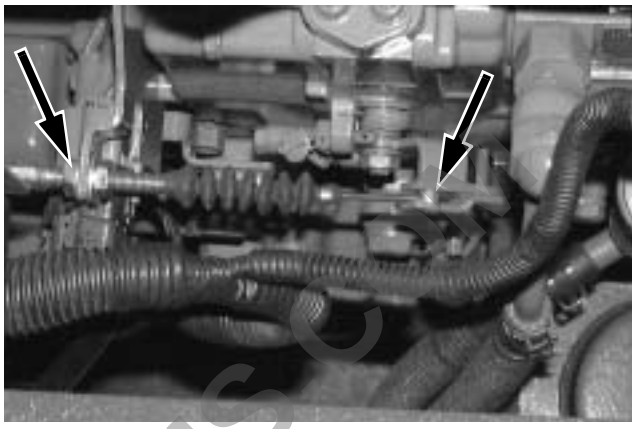

CD00J024

Remove the engine throttle control.

STEP 7

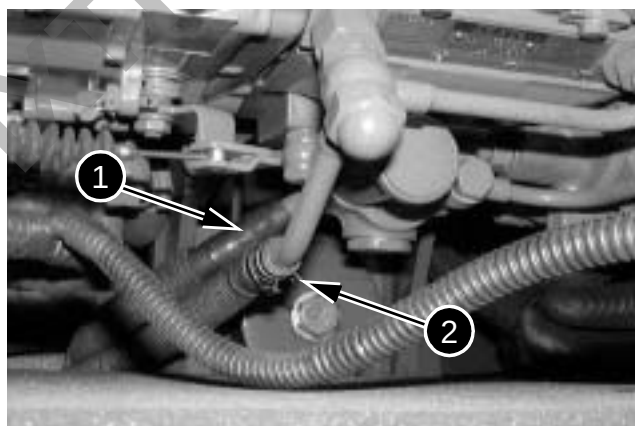

CD00J025

Disconnect the fuel supply pipe (1) and the fuel return pipe (2) and plug them.

STEP 8

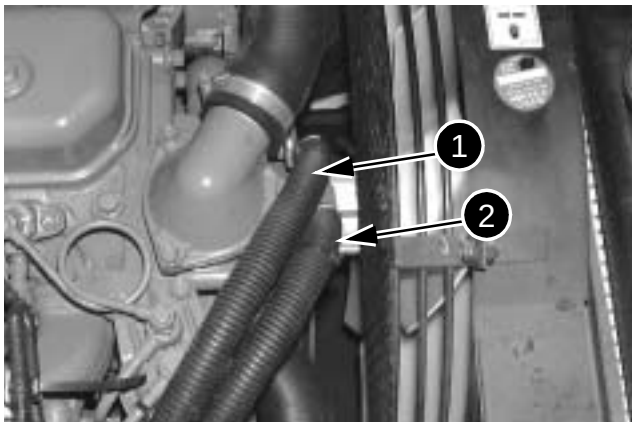

CD00J026

Remove the hoses (1) and (2) from the heater system and plug them.

PREVIEW YOUFIX-HIS.COM

SPECIAL TORQUE SETTINGS

No.	Component	Screw (Ø)	Key (mm)	Torque setting (lb-ft)
1 *	Travel motor/reduction gear assembly	M16	24	197-230
2 *	Sprocket	M16	24	197-230

Blurred on purpose. The manual you buy has this page in full quality.

PREVIEW - YOUFIXTHIS.COM

Download full manual at youfixthis.com

TROUBLESHOOTING

Prior Inspections

Item	Value	Action
POINTS TO BE CHECKED WHEN STARTING		
Lubricants - Coolants		
1. Check the quantity of fuel	---	Add fuel
2. Check that fuel is not contaminated	---	Clean, drain
3. Check the quantity of hydraulic fluid	---	Fill with fluid
4. Inspect the hydraulic fluid filter	---	Drain, clean
5. Check the quantity of oil in each reduction gear	---	Fill with oil
6. Check the quantity of engine oil	---	Fill with oil
7. Check the quantity of coolant	---	Fill with water
8. Check the filter restriction indicator (dust)	---	Clean or change
Electrical equipment		
9. Check the battery terminals and wiring for tightness and corrosion	---	Tighten or change
10. Check the alternator terminals and wiring for tightness and corrosion	---	Tighten or change
11. Check the starter motor terminals and wiring for tightness and corrosion	---	Tighten or change
OTHER POINTS TO CHECK		
Hydraulic system - Mechanical equipment		
12. Abnormal noise or smell	---	Repair
13. Check for oil leaks	---	Repair
14. Air in the system	---	Bleed the air
Electrical system - Electrical equipment		
15. Check the battery voltage (with engine shut down)	23-26 V	Change
16. Check the quantity of fluid in the battery	---	Add or change
17. Make sure that the cables are not discolored, burnt or stripped	---	Change
18. Check for missing or loose cable retaining clips	---	Repair
19. Check for dampness on cables (especially on connectors and terminals)	---	Disconnect and dry if damp
20. Check fuses for condition and corrosion	---	Change
21. Check the alternator voltage (with engine speed above the throttle control mid-point) (when battery charge is insufficient, there can be 25 V only at start up)	27.5-29.5 V	Change
22. Noise from battery relay (with starter motor ON or OFF)	---	Change

PREVIEW - YOUFIXTHIS.COM

SPECIAL TOOLS



Blurred on purpose. The manual you buy has this page in full quality.

PREVIEW - YOUFIXTHIS.COM

Download full manual at youfixthis.com

Removal

STEP 1

Park the machine on hard, flat ground. Rotate the upperstructure of the machine so that the cab is over the track to be removed.



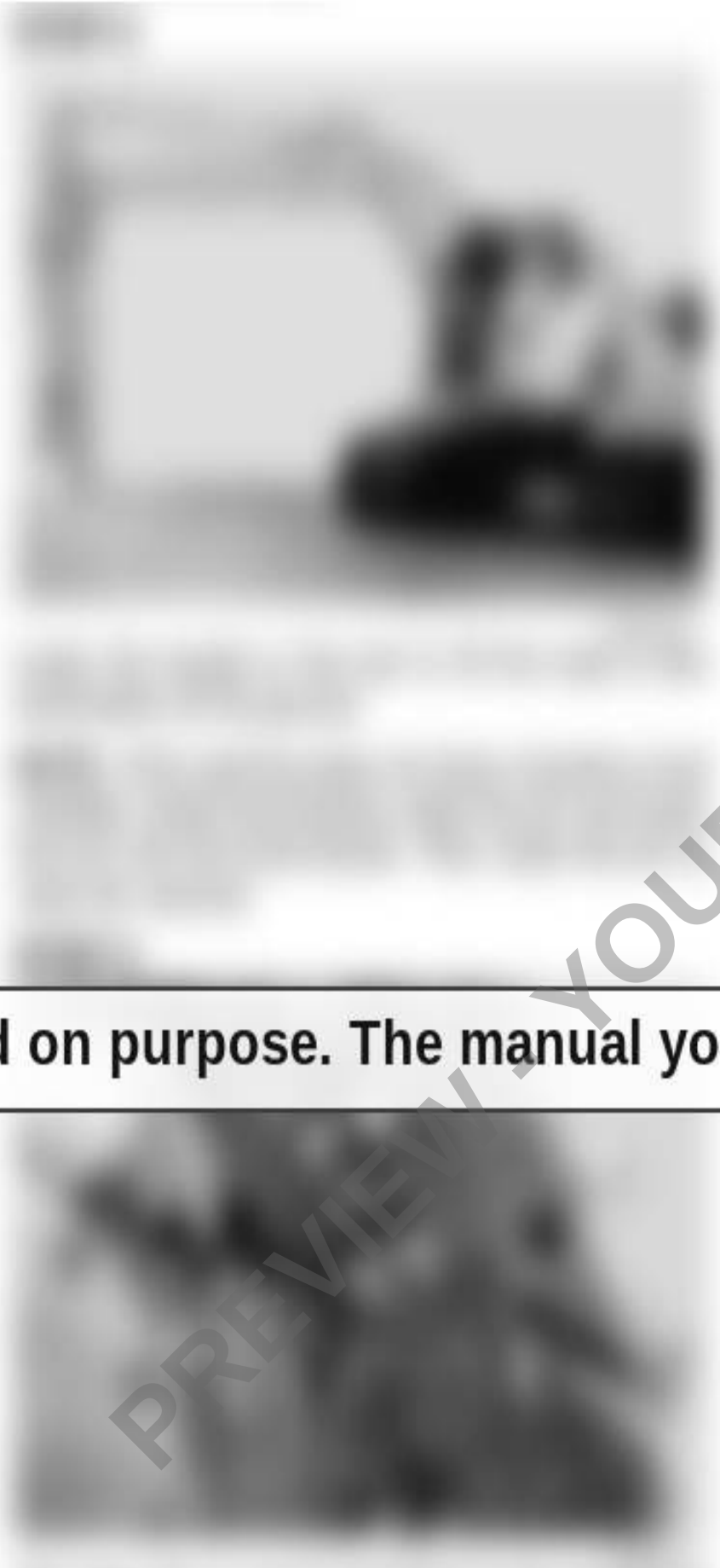





Blurred on purpose. The manual you buy has this page in full quality.

PREVIEW - YOUFIXTHIS.COM

Download full manual at youfixthis.com

160LX Crawler Excavators
Table of Contents

DIVISION/SECTION		SECTION N°	REFERENCE N°
1	**GENERAL INFORMATION**		
	Safety, general information and standard torque data	1001	7-27690LX
	General specifications and special torque setting	1002	7-27712-16LX
2	**ENGINE**		
	Removal and installation of the engine	2000	7-28220LX
	Radiator and oil-cooler	2001	7-28040LX
3	**FUEL SYSTEM**		
	Removal and installation of the Fuel tank	3001	7-27970LX
4	**ELECTRICAL SYSTEM**		
	Electrical system, electrical and electronic troubleshooting	4001	7-28250-16LX
	Inspection and maintenance of batteries and connecting a booster battery	4002	7-27921LX
	Main and engine electronic control boxes	4003	7-27931-16LX
5	**UNDERCARRIAGE**		
	Removal and installation of the tracks set	5001	7-27750LX
	Upper and lower rollers	5003	7-27770-16LX
	Sprocket	5004	7-27781LX
	Idler wheel and tension shock absorber	5005	7-27801-16LX
6	**DRIVE TRAIN**		
	Drive motor and final drive transmission removal and installation	6001	7-27841LX
	Drive motor and final drive transmission disassembly and assembly	6002	7-29860LX
	Swing reduction gear, removal and installation	6003	7-29900LX
	Swing reduction gear, disassembly and assembly	6004	7-28370LX
7	**UNDERCARRIAGE HYDRAULICS**		
8	**UPPERSTRUCTURE HYDRAULICS**		
	Depressurising and decontaminating the hydraulic system, use of the vacuum pump and bleeding the components	8000	7-27951-16LX
	Specifications, troubleshooting, checks and hydraulic pressure settings	8001	7-28270-16LX
	Hydraulic sump tank removal and installation	8002	7-27990LX
	Main and pilot pumps, removal and installation	8003	7-27870LX
	Main hydraulic control valve, removal and installation	8004	7-27880LX
	Attachment cylinders, removal and installation	8005	7-27791LX
	Rotating joint, removal and installation	8006	7-27811LX
	Pilot blocs, removal and installation	8007	9-35520LX
	Swing motor, removal and installation	8008	7-29890LX
	Free swing, disassembly and assembly	8009	9-35530LX
	Main hydraulic pump, disassembly and assembly	8010	7-29770LX
	Main hydraulic control valve, disassembly and assembly	8011	7-28200LX
	Attachment cylinders, disassembly and assembly	8012	7-27900-16LX
	Hand joystick control , disassembly and assembly	8013	7-28110LX
	Foot joystick control , disassembly and assembly	8014	7-28300LX
	Six stack solenoid valve, disassembly and assembly	8015	7-27910LX
	Cushion control, disassembly and assembly	8016	7-27940LX
	Hose burst check valve	8017	7-29630-16LX
	Rotating joint, disassembly and assembly	8018	7-28080LX
	Swing motor, disassembly and assembly	8019	7-28010LX
	Hydraulic functions	8020	7-28430-16LX

PREVIEW - YOUFIXTHIS.COM

Copyright © 2001 Link-Belt
Printed in U.S.A.
November 2001

DIVISION/SECTION	SECTION N°	REFERENCE N°
9 UPPERSTRUCTURE		
Upperstructure, turntable and counterweight	9002	7-27981-16LX
Boom, arm and bucket	9003	7-27961-16LX
Seat and safety belt	9004	7-28120LX
Cab and cab equipment	9005	7-28021-16LX
Air conditioning troubleshooting	9006	[redacted]
Air conditioning unit disassembly and assembly	9007	[redacted]
Air conditioning servicing	9008	[redacted]
Air conditioning components	9009	[redacted]
Large format hydraulic and electrical schematics	Pocket	7-28501

* *Consult the Engine Service Manual*

[redacted] *Sections to be distributed at a later date*

NOTE: Link-Belt Company reserves the right to make changes in the specification and design of the machine without prior notice and without incurring any obligation to modify units previously sold.

The description of the models shown in this manual has been made in accordance with the technical specifications known as of the date of design of this document.

PREVIEW - YOUFIXTHIS.COM

TABLE OF CONTENTS

SPECIFICATIONS 2

SPECIAL TORQUE SETTINGS 2

ENGINE 3
Removal and installation 3

SPECIFICATIONS

Weight of engine ..... See Section 1002

SPECIAL TORQUE SETTINGS

Engine retaining screws ..... See Section 1002

> ⚠ **WARNING:** *The components of the engine and the hydraulic pump reach high temperatures when the machine is operating. To avoid being burnt by hot metal or scalded by high temperature water or oil, allow the machine to cool down before starting any servicing operation.*

PREVIEW - YOUFIXTHIS.COM

Automatic Mode Control

1) Circuit configuration

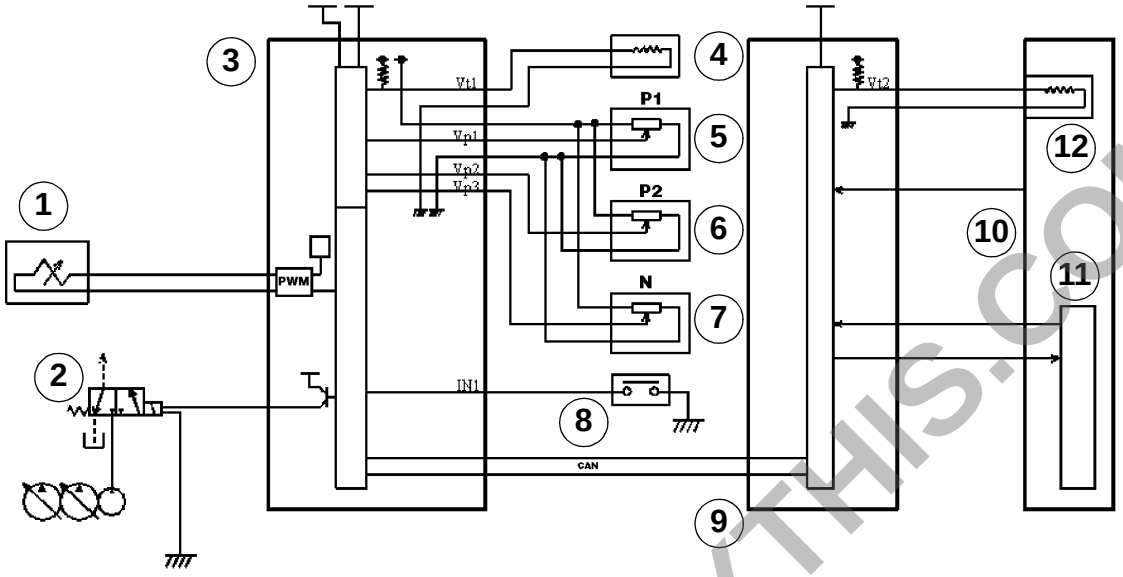

CS00F510

1. Proportioning valve
2. Power up solenoid valve
3. Main electronic control box
4. Hydraulic oil temperature sender
5. Pressure transducer P1
6. Pressure transducer P2
7. Negative pressure transducer (N)
8. Travel pilot pressure switch
9. Engine electronic control box
10. Engine
11. Electronic acceleration
12. Water temperature transducer

2) Description

1. If auto mode is selected, 2 modes, SA and LA, are available.
2. When auto mode is selected, LA mode is engaged, which then automatically changes to SA or LA depending on working conditions.
3. If the engine coolant solution temperature is below 122°F or the oil temperature below 77°F, auto mode control does not operate and LA mode is selected. When the water temperature is above 122°F and the oil temperature above 77°F, auto mode starts and continues operating even if the water and oil temperatures fall.
4. When auto mode control is operating, if the travel pressure switch (8) is operated, the mode change does not take place. (If the travel pressure switch is operated in SA mode, the system stays in SA mode and if the pressure switch is operated in LA mode, the system stays in LA mode).

SA mode	Number of engine revolutions (MAX)	rpm	2050±10
	Current (equal to S mode + 40 mA)	mA	---
	Hydraulic power up	---	---
LA mode	Number of engine revolutions (MAX)	rpm	1950±10
	Current (equal to S mode)	mA	---
	Hydraulic power up	---	---

PREVIEW - YOUFIXTHIS.COM

3. Machine condition CHK3

CHK	MODE II H		
3			
SW1	0000	SW4	0000
SW2	0000	SW5	0000
SW3	0100	SW6	0000
		SW7	0000

SW1 to SW3 Electronic control box pressure switch inputs

SW4 to SW7 Electronic control box switch inputs

Pressure switch and electronic control box switch inputs: 0 = OFF, 1 = ON

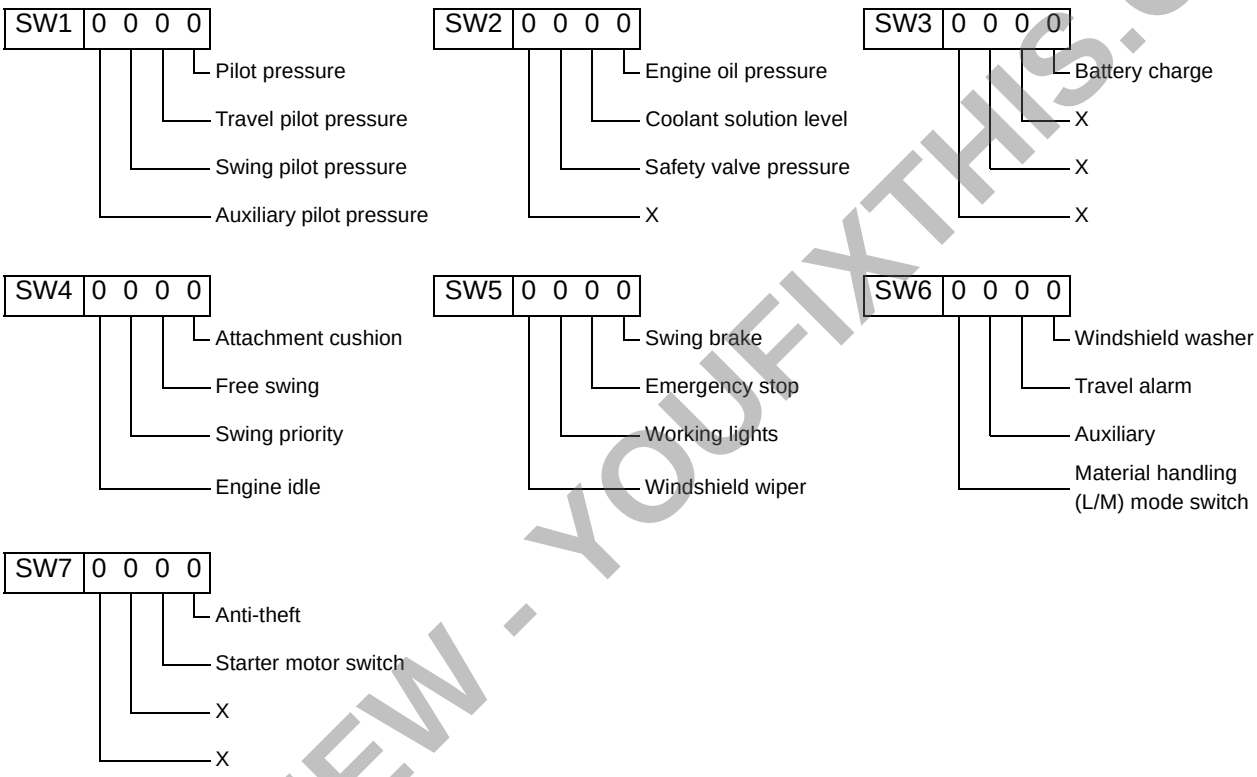

X = Not used

PREVIEW - YOUFIXTHIS.COM

Proportioning Valve

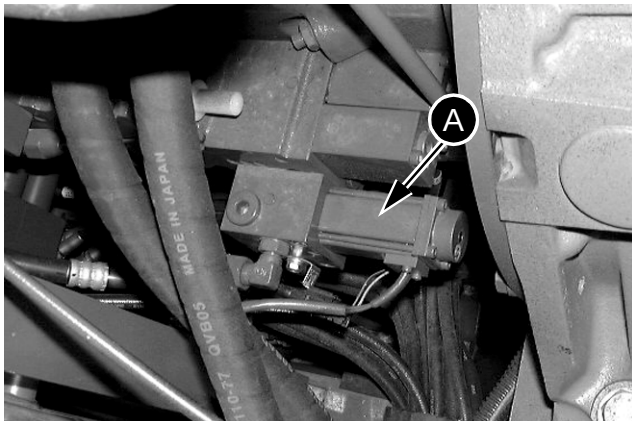

CD00F021

1. Disconnect the proportioning valve connector (A) from the hydraulic pump.

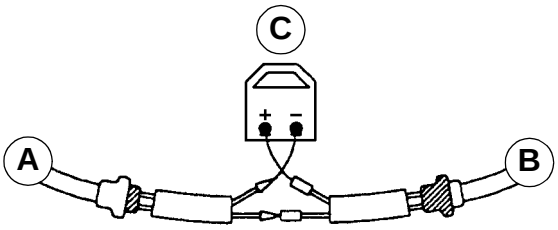

CS00E534

A. To hydraulic pump
B. To main harness
C. Meter

2. Connect the appropriate service connector (2P) between the connector at the pump end and the connector at the main harness end and install the meter.

NOTE: *The + terminal of the meter should be connected to wire BrB (brown/black) on the service connector coming from the main harness and the - terminal to wire BrB (brown/black) on the service connector coming from the hydraulic pump.*

3. When the connections have been made, start the engine and check the current in each work mode, at maximum speed.

Current in mA

Mode	H		S	L	Auto	
	Max	Min			S	L
	---	---	---	---	---	---

Engine Emergency Stop Motor

1. Disconnect connector (A) from the engine emergency stop motor (B).

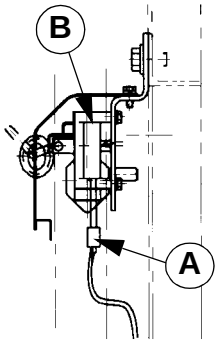

CS00E535

2. Connect the appropriate service connector (6P) to the connector at the main harness end only.

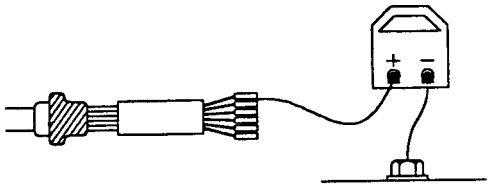

CS99A846

PREVIEW - YOUFIXTHIS.COM

CHECKING FOR LEAKS

Use K1P0015 and K1P0016 for the leak checks shown below.

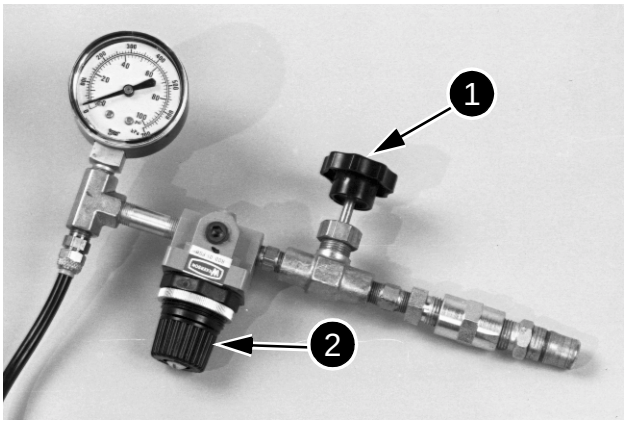

B407320M

STEP 1

Connect the shut-off valve (1) to the pressure regulator (2). Connect a union for the air supply hose to the shut-off valve.

STEP 2

Install the adaptor and a quick coupler to the oil filler orifice. Use a seal washer with the adapter.

STEP 3

Turn the knob anti-clockwise to close the pressure regulator (2).

STEP 4

Connect the pressure gauge pipe to the quick coupler.

STEP 5

Make sure that the shut-off valve (1) is open.

STEP 6

Adjust the pressure regulator (2) until the pressure gauge shows 27.5 psi (1.9 bar).

STEP 7

Turn the shaft of the unit under test four revolutions.

STEP 8

Adjust the regulator until the pressure gauge shows 14.5 psi (1 bar).

STEP 9

Close the shut-off valve. Maintain the air pressure of step 8 for 10 seconds. A reduction in air pressure during this period shows a defective component or incorrect assembling.

PREVIEW - YOUFIXTHIS.COM

TRAVEL MOTOR AND REDUCTION GEAR ASSEMBLY

Description

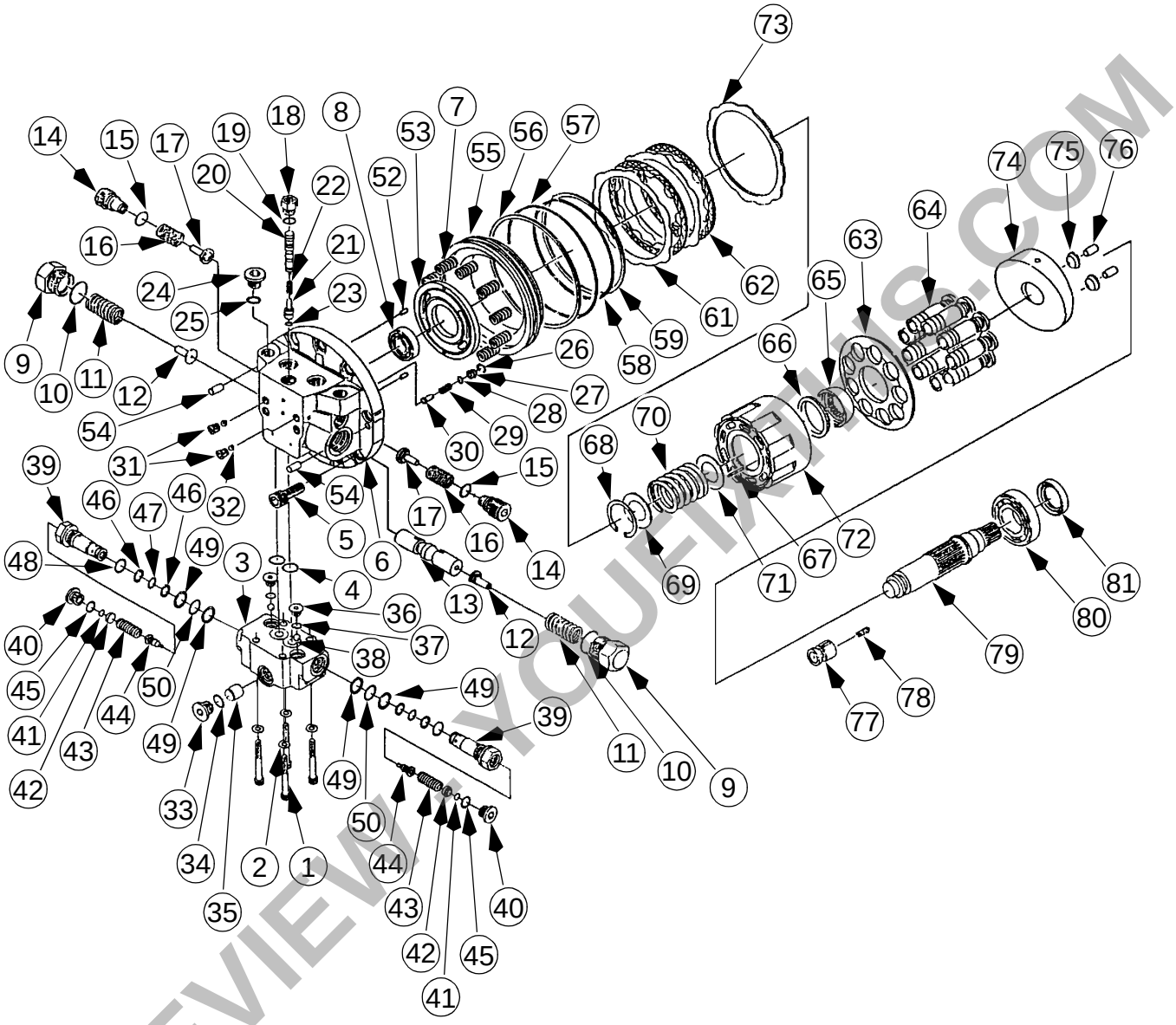

PREVIEW - YOUFIXTHIS.COM

STEP 71

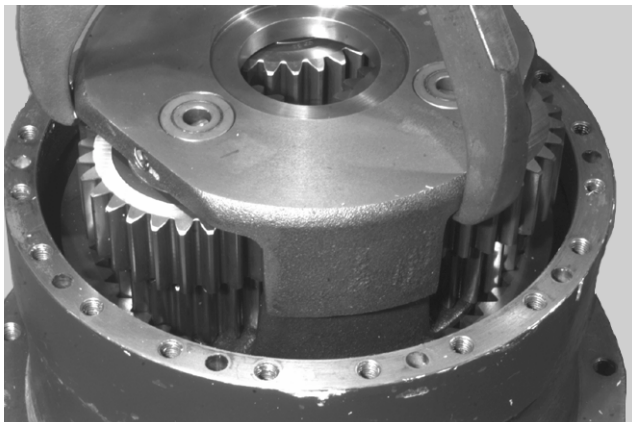

JD00930A

Using a suitable lifting device, position the satellite-carrier (92) above the hub (114). Slowly lower the satellite-carrier assembly (92) into the hub, engaging the planetary teeth (90) with the teeth on the sun gear (93) and the teeth in the crown wheel (104). Remove the lifting device.

STEP 72

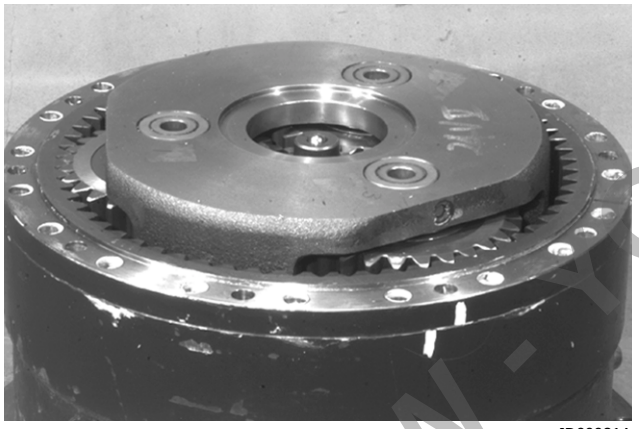

JD00931A

Degrease the contact surfaces of the hub (114) and the crown wheel (98). Apply Loctite 572 to the contact surfaces of the hub (114) and the crown wheel (98). Install the crown wheel (98) in the hub (114), engaging the teeth of the crown wheel (98) in the teeth of the planetaries (90). Place the crown wheel (98) so that the alignment marking made during disassembly on the crown wheel (98) is to the right of the alignment marking on the hub (114).

STEP 73

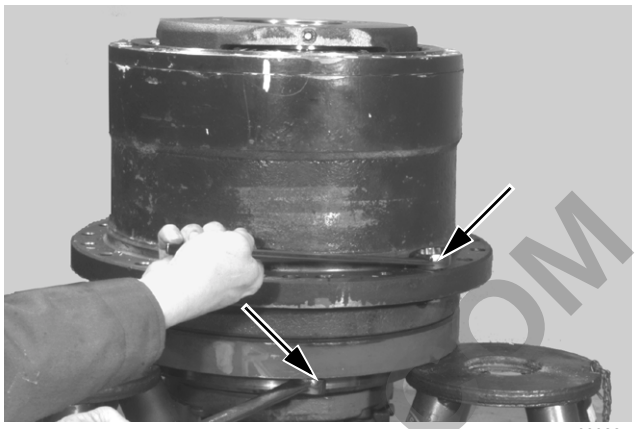

JD00932A

Install a screw M24 on the hub (114) and a screw M24 on the knuckle (101) as shown above. Using two wrenches, turn the hub until the alignment marks are aligned. Remove the screws.

STEP 74

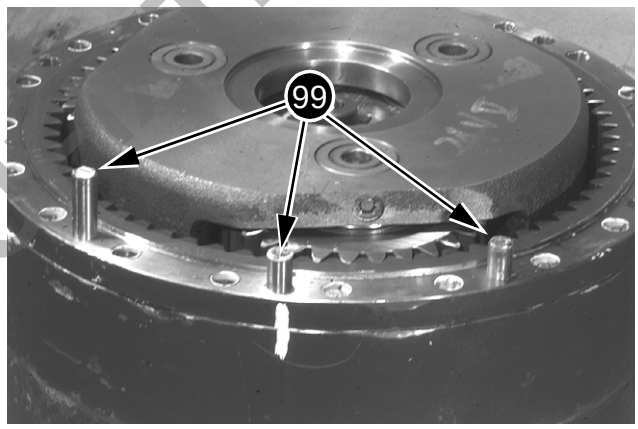

JD00933A

Install the centring studs (99) in the crown wheel (98) and the hub (114).

STEP 75

Fill the hub with transmission oil.

NOTE: *For the quantity and specifications of the oil, see Specifications.*

PREVIEW - YOU CAN THIS .COM

SPECIAL TOOLS

Tester



B877558M

1. *K1P0005 PRESSURE FITTING KIT*

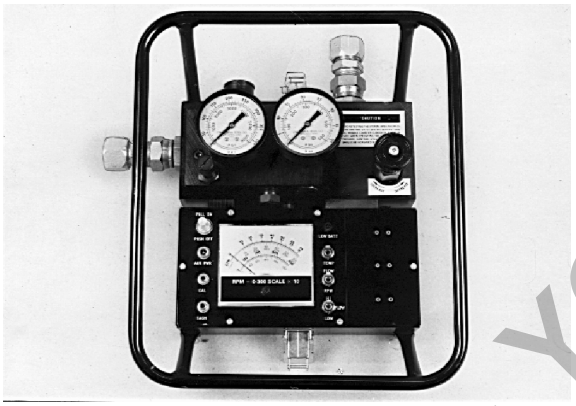

B785789R

2. *K1P0006 FLOW METER*

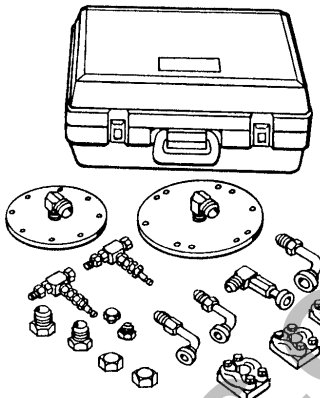

CS99B532

3. *SET OF UNIONS FOR PRESSURE TEST AND HYDRAULIC FLOW K1P0003.*

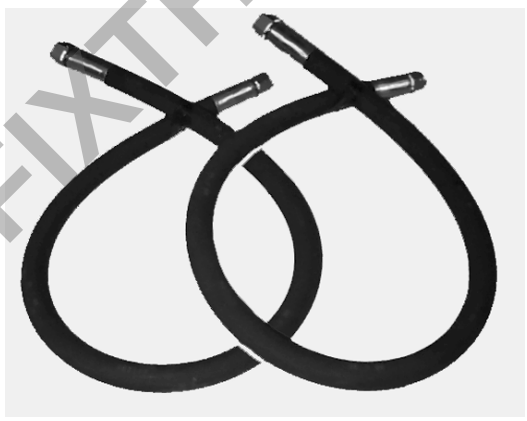

CD99C002

4. *SET OF HIGH PRESSURE HYDRAULIC HOSES K1P0011 (INCLUDING TWO HIGH PRESSURE HOSES).*

PREVIEW - YOUFIXTHIS.COM

Installation

STEP 1

Remove the cloth or other suitable protection from the reduction gear. Degrease the contact surfaces between the motor and the swing reduction gear. Apply Loctite 504 to the contact surface of the swing reduction gear.

STEP 2



JD00446A

Attach a suitable lifting device to the swing reduction gear. Position the swing motor above the reduction gear. Carefully lower the motor onto the reduction gear. Remove the lifting device.

STEP 3



JD00386A

Install the retaining screws (1) which fasten the motor to the swing reduction gear. Tighten the screws to a torque of 76 lb-ft (103 Nm).

STEP 4

Start the vacuum pump.

STEP 5

Remove the plugs. Connect all the hoses to the swing motor.

STEP 6

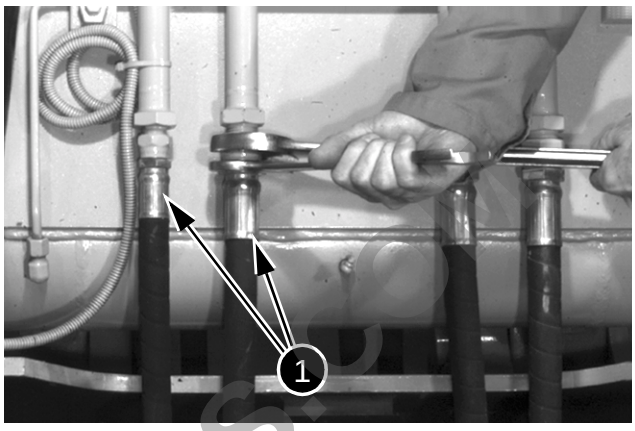

JD00384A

Remove the plugs. Connect the hoses (1) above the bottom of the boom.

STEP 7

Stop the vacuum pump and remove the vacuum pump from the machine (see Section 8000).

STEP 8

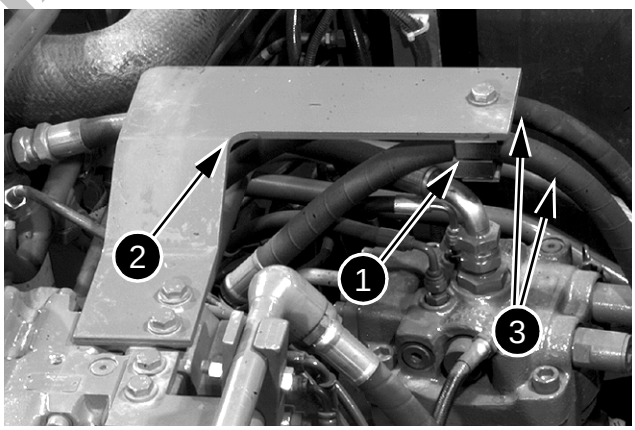

JD00378A

Install the bracket (2) on the control valve. Install the hoses (3) on the bracket (2) by means of the flange (1).

PREVIEW YOUFIXTHIS.COM

STEP 2

(Only if the machine is equipped with cylinder hose burst check valves)

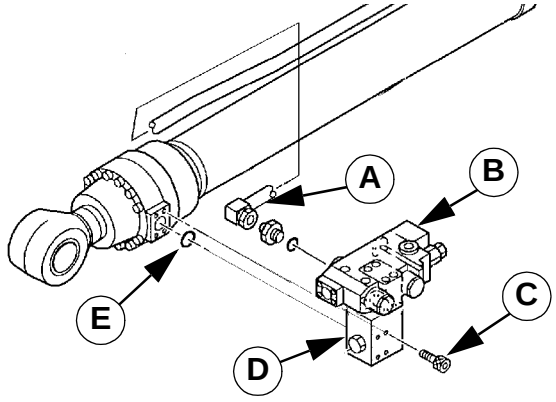

CS00G504

Install a new O-ring (E) on the arm cylinder and install the cylinder hose burst check valves (B) and the base (D) with the screws (C). Connect the pipe (A).

NOTE: *Carefully raise the cylinder. The cylinder is heavy and the weight must be carefully distributed over the slings when lifting.*

STEP 3

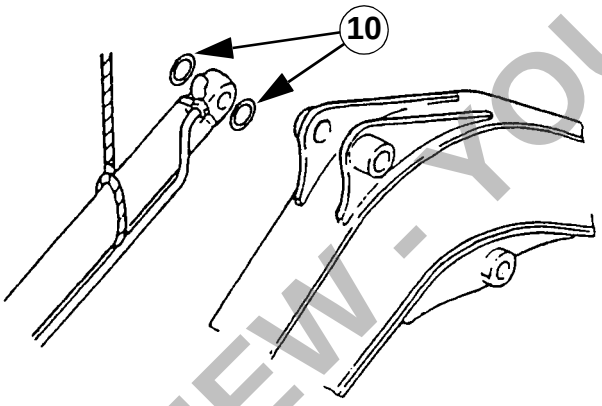

JS00602A

Attach a suitable lifting device to the arm cylinder, lift the arm cylinder and bring it into position. Align the arm cylinder mounting orifices with the boom brackets and install the shims (10).

STEP 4

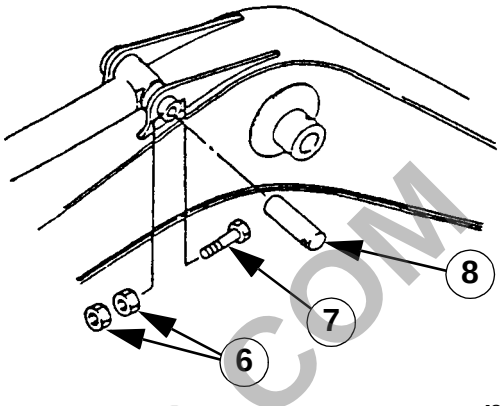

JS00601A

Install the pin (8) and fasten the pin with the screw (7). Using a set of feeler gauges, check that there is a clearance of 0.019 to 0.118 inch (0.5 to 3 mm) between the mounting bracket and the cylinder barrel mounting eye. If necessary, remove the screw and the pin and add or remove one or more shims (10) as required to obtain the correct clearance. Install the pin and the screw. Install the first nut (6) on the screw and tighten until the nut touches the bracket boss. Loosen the nut a quarter of a turn and, using two wrenches, install the second nut (6) to lock the first nut in position.

STEP 5

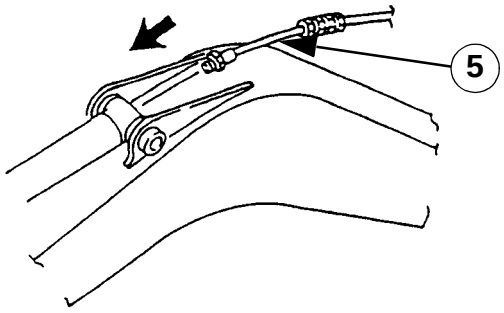

JS00604A

Connect the lubrication hose (5) to the arm cylinder.

PREVIEW - YOUFIXTHIS.COM

IDENTIFYING THE PORTS

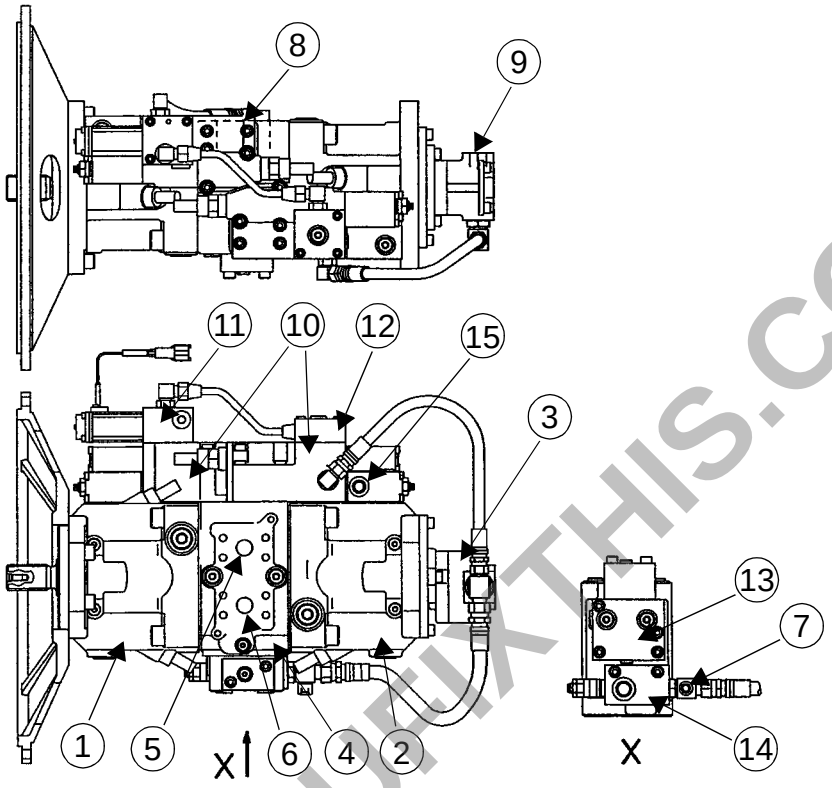

CI01E517

1 FRONT PUMP BODY
2 REAR PUMP BODY
3 GEAR PUMP BODY
4 INTERMEDIATE PLATE
5 FRONT PUMP OUTPUT PORT
6 REAR PUMP OUTPUT PORT
7 GEAR PUMP OUTPUT PORT
8 MAIN PUMP SUCTION PORT
9 GEAR PUMP SUCTION PORT
10 REGULATOR BLOCK
11 ELECTROMAGNETIC PRESSURE REDUCTION PROPORTIONING VALVE
12 REAR PUMP PROPORTIONING VALVE CONTROL COVER
13 FRONT AND REAR PUMP BALANCE VALVE
14 PILOT CIRCUIT VALVE
15 PUMP CONTROL PRESSURE INSPECTION PORT

PREVIEW - YOUFIXTHIS.COM

STEP 15

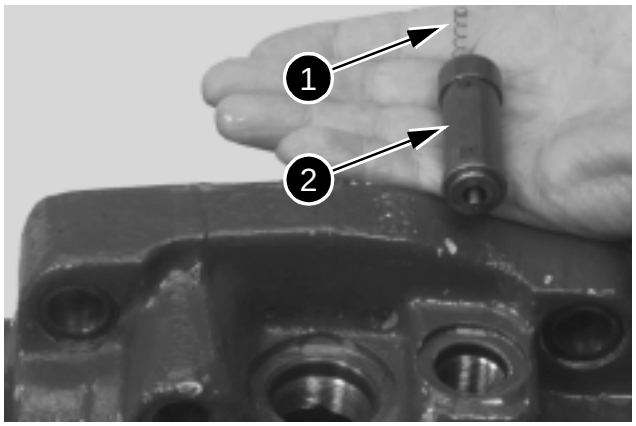

JD00408A

Reposition the cover and install the spring (1) and valve assembly (2) in bypass valve port of cover.

STEP 16

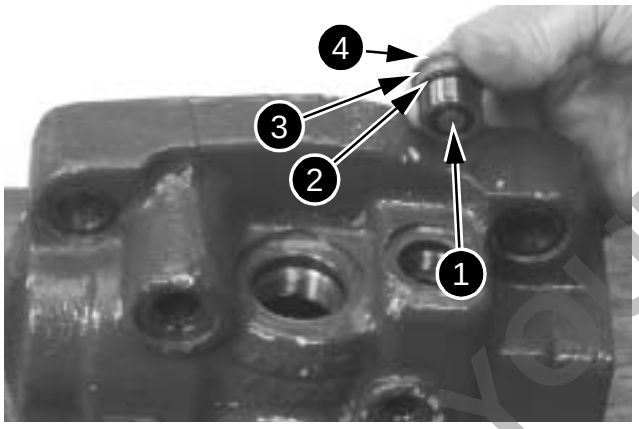

JD00407A

Install two new O-rings (1) and (2) and a new teflon back-up ring (3) on bypass valve plug (4).

STEP 17

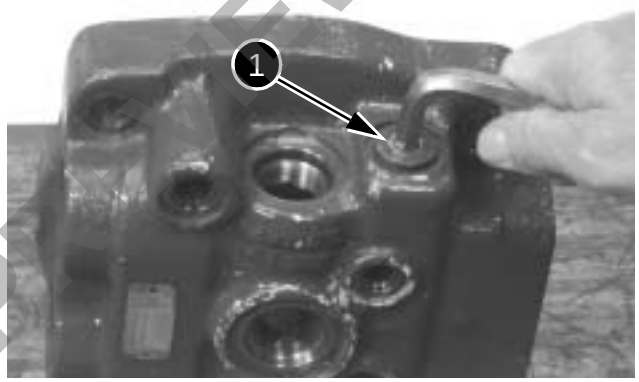

JD00406A

Install bypass valve plug (1) in cover. Tighten the plug to a torque of 17.5 lb-ft (23.8 Nm).

STEP 18

Repeat steps 15 through 17 to install second bypass valve on other side of cover.

STEP 19

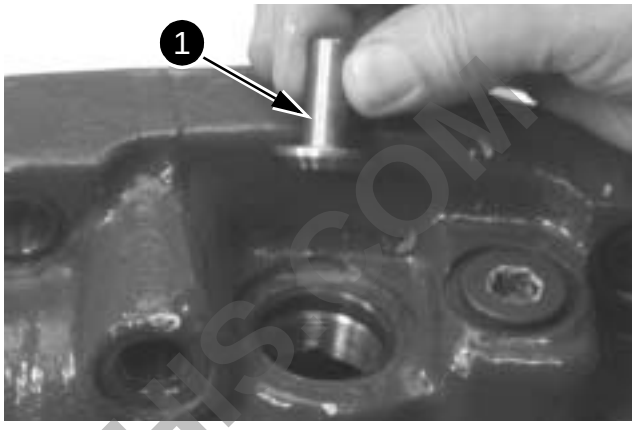

JD00405A

Install the check valve (1) in the cover.

STEP 20

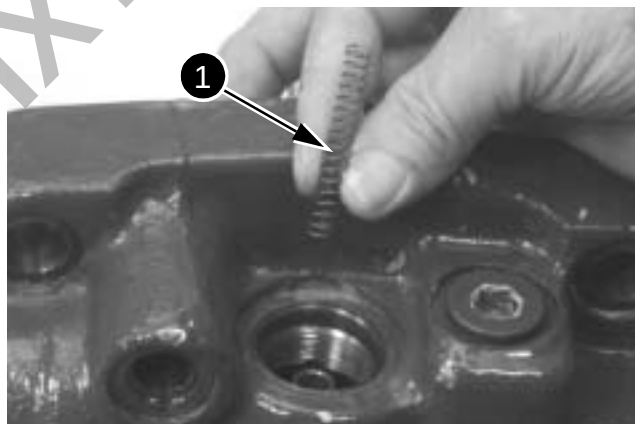

JD00404A

Install the spring (1) in the cover.

STEP 21

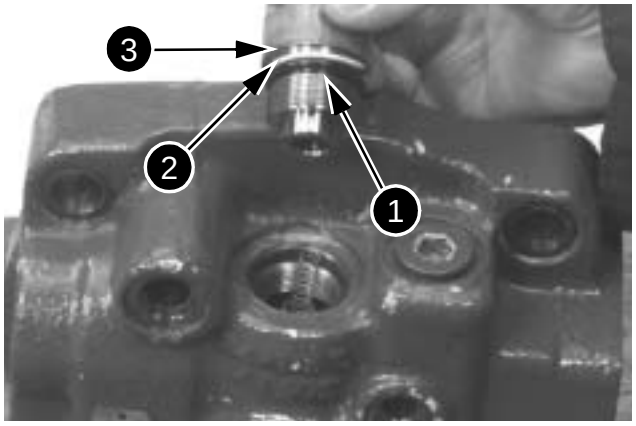

JD00403A

Install a new O-ring (1) and a new back-up ring (2) on the plug (3).

PREVIEW - YOUFIXTHIS.COM

STEP 3



JD00561A

Install the spring (4) in the spool (3).

STEP 4

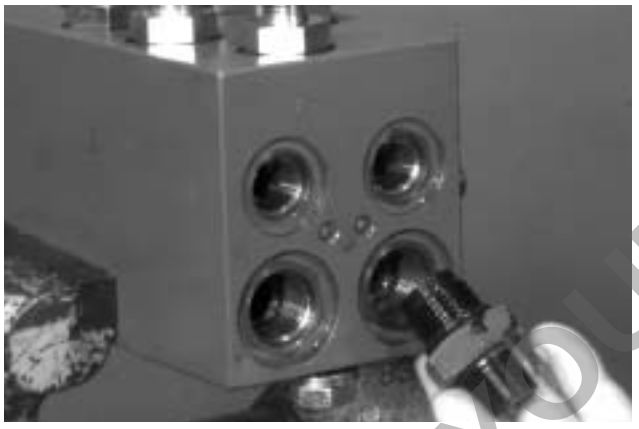

JD00562A

Install a new O-ring (6) on the flow restriction adaptor (7). Install the flow restriction adaptor in the control valve housing.

STEP 5

Repeat steps 1 through 4 for remaining three spools.

STEP 6



JD00554A

Install the spring guide (11) using a new O-ring (12) on the spool (13).

STEP 7



JD00563A

Install the spring (10) on the spool (13).

STEP 8



JD00564A

Install the spring (10), the spring guide (11) and the spool (13) in the groove of the control valve housing.

STEP 9



JD00565A

Install the spring (10).

PREVIEW - YOUFIXIT.COM

1 LUBRICATION FITTING
2 NOT USED
3 NOT USED
4 SCREW
5 HYDRAULIC PIPE
6 O-RING
7 SCREW
8 WASHER
9 RETAINING CLIP
10 NOT USED
11 SCREW
12 WASHER
13 RETAINING CLIP
14 SCREW
15 BEARING
16 SCREW
17 STEEL BALL
18 PISTON NUT
19 PISTON
20 SEAL RING
21 BACK UP RING
22 WEAR RING
23 WEAR RING
24 SHIM
25 NOT USED
26 NOT USED
27 NOT USED
28 NOT USED
29 O-RING
30 BACK UP RING
31 WEAR RING
32 BACK UP RING
33 SQUARE SEAL
34 U-RING
35 BACK UP RING
36 WIPER SEAL
37 STOPPING RING
38 BUSHING
39 NOT USED
40 CUSHION BUSHING
41 WIPER SEAL
42 BUSHING
43 CYLINDER ROD
44 CYLINDER BARREL
45 O-RING

PREVIEW - YOUFIXTHIS.COM

ARM LOAD HOLDING BLOCK (3)

Disassembly

STEP 1

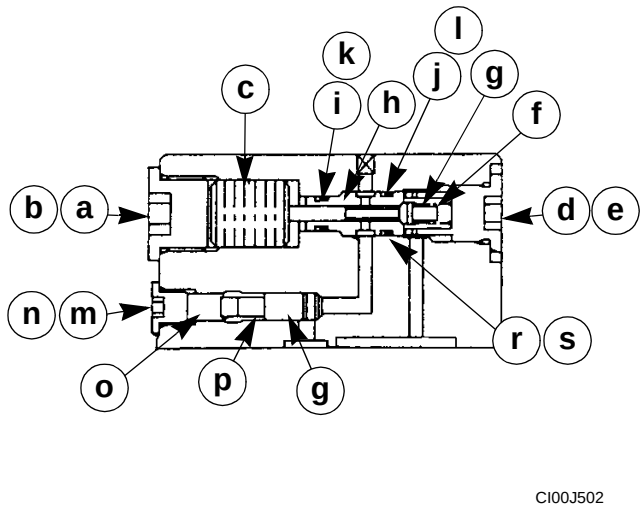

CI00J502

A PLUG
B O-RING
C PISTON
D PLUG
E O-RING
F SPRING
G CHECK VALVE
H SLEEVE
I O-RING
J O-RING
K BACK-UP RING
L BACK-UP RING
M PLUG
N O-RING
O SPACER
P SPRING
Q NON-RETURN CHECK VALVE
R O-RING
S BACK-UP RING

Remove the plug (a) and discard the O-ring (b).

STEP 2

Remove the piston (c) from the load holding block.

STEP 3

Remove the plug (d), discard the O-rings (e), (r) and the back-up ring (s).

STEP 4

Remove the spring (f) and the check valve (g).

STEP 5

Remove the sleeve (h) from the block. Discard the O-rings (i) and (j) and the back-up rings (k) and (l).

STEP 6

Remove the plug (m). Discard the O-ring (n).

STEP 7

Remove the spacer (o), the spring (p) and the non-return check valve (q).

Inspection

See "Inspection" chapter page 31.

Assembly

STEP 1

Install the non-return check valve (q), the spring (p) and the spacer (o) in the load holding block.

STEP 2

Install a new O-ring (n) on the plug (m). Install the plug (m) on the load holding block. Tighten to a torque of 15 lb-ft (20 Nm).

STEP 3

Install new O-rings (i) and (j), and new back-up rings (k) and (l) on the sleeve (h). Install the sleeve (h) on the load holding block.

STEP 4

Install the check valve (g) and then the spring (f) in the sleeve (h).

STEP 5

Install new O-rings (e), (r) and a back-up ring (s) on the plug (d). Install the plug (d) on the load holding block. Tighten to a torque of 36 lb-ft (49 Nm).

STEP 6

Install the piston (c) in the load holding block.

STEP 7

Install a new O-ring (b) on the plug (a). Install the plug (a) on the load holding block. Tighten to a torque of 43.5 lb-ft (59 Nm).

PREVIEW - YOUFIXTHIS.COM

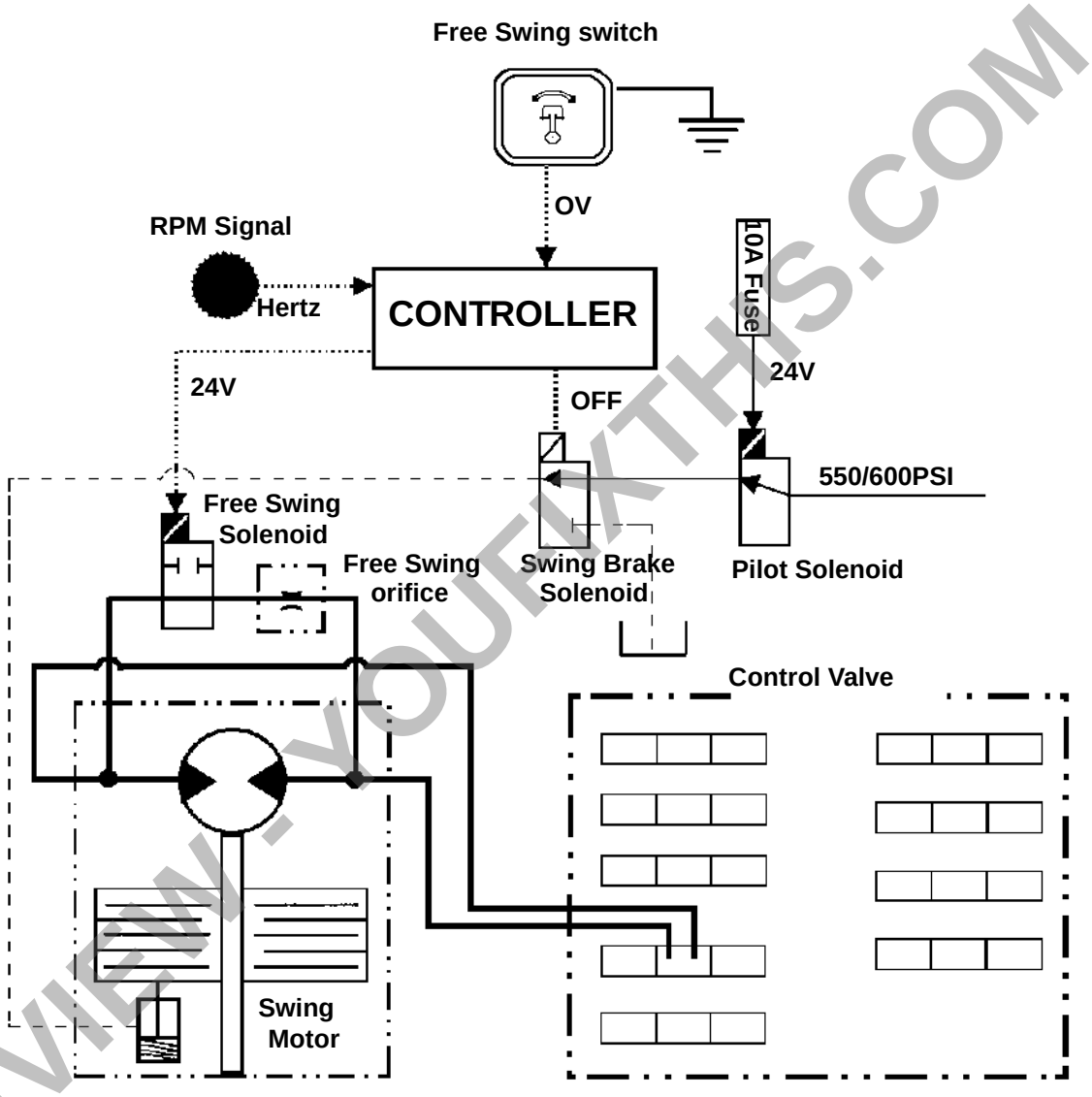

CM00K008

PREVIEW - YOUFIXTHIS.COM

NOTE: *For the LH control arm, do not carry out step 8.*

STEP 8



CD00G066

Remove the mask then remove the air-conditioning box using the four screws. Remove the latter.

STEP 9

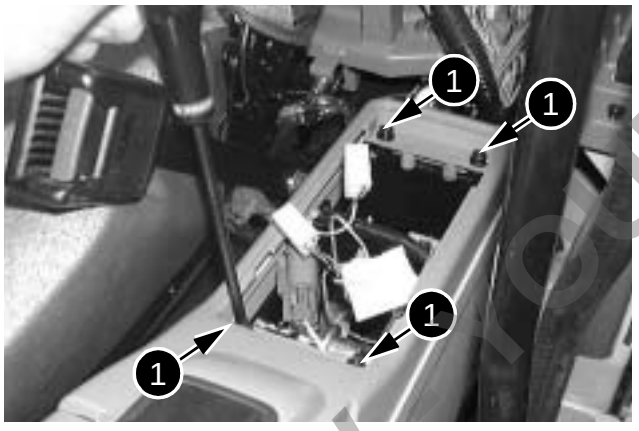

CD00G052

Loosen and remove the four screws (1) from the rear portion of the control arm.

STEP 10

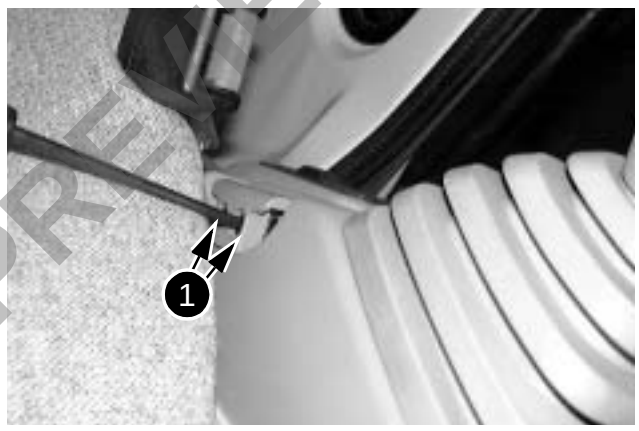

CD00G053

Loosen and remove the two screws (1) that hold the arm angle adjustment lever, then remove the lever.

STEP 11

Lift the upper portion of the control arm and position it on the side.

STEP 12

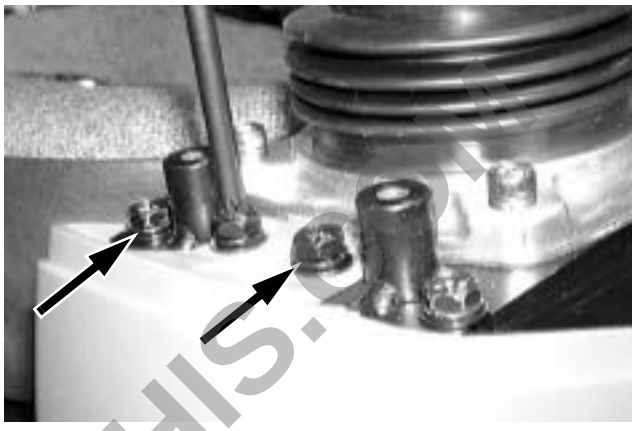

CD00G117

Loosen and remove the two upper screws as well as the two lower screws that hold the front portion of the control arm.

NOTE: *For the RH control arm, do not carry out steps 13 and 14.*

STEP 13



CD00G118

Loosen and remove the screws that hold the LH side portion of the control arm.

PREVIEW TOUFIXTHIS.COM

PREVIEW ONLY

You're viewing 25 of 621 pages

The full manual includes:

- All 621 pages, complete
- Searchable PDF (find any keyword)
- No watermarks
- Instant download
- Print-ready quality

GET FULL MANUAL NOW

Link-belt 160 LX Service Manual

Scan or click anywhere
youfixthis.com

Click anywhere on this page to get the full manual