SPECIFICATIONS

Engine

Make ..... Isuzu
Model BB-6BG1T

Type: Four stroke, water-cooled, overhead valve, direct injection (electronically controlled), in-line engine with turbo-

Blurred on purpose. The manual you buy has this page in full quality.

PREVIEW - YOUFIXTHIS.COM

Download full manual at youfixthis.com

ENGINE

Removal and installation

STEP 1

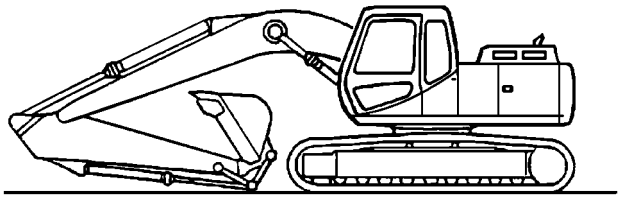

JS00163A1

Park the machine on hard, flat ground. Lower the attachment to the ground.

STEP 2

Release pressure in the hydraulic system and in the hydraulic sump tank (see Section 8000).

STEP 3

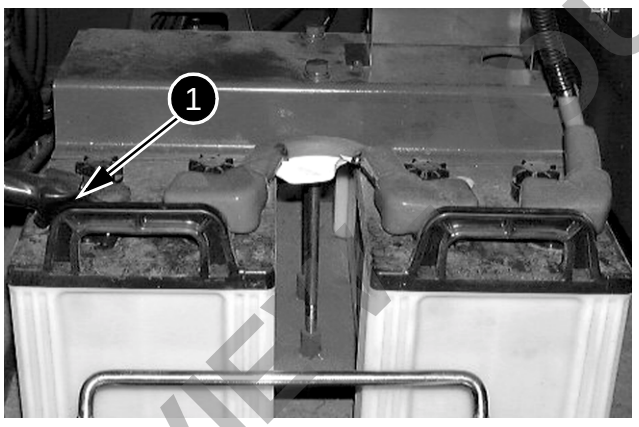

CD00F091

Disconnect the ground cable from the battery (1) (-).

STEP 4

Refer to Section 8003 and remove the hydraulic pump.

STEP 5

Refer to Section 2001 and remove the radiator and oil-cooler assembly.

STEP 6

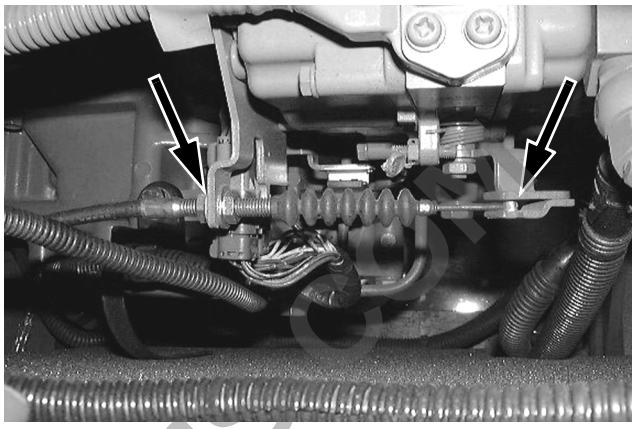

CD00J037

Remove the engine throttle control.

STEP 7

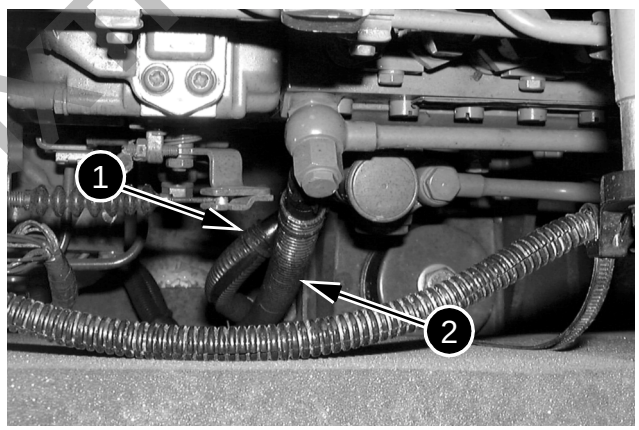

CD00J038

Disconnect the fuel supply pipe (1) and the fuel return pipe (2) and plug them.

STEP 8

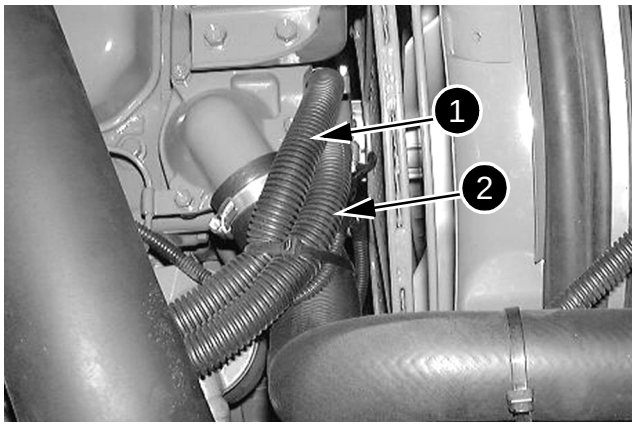

CD00J039

Remove the hoses (1) and (2) from the heater system and plug them.

PREVIEW OUFIT-HS.COM

TROUBLESHOOTING

Prior Inspections

Item	Value	Action
POINTS TO BE CHECKED WHEN STARTING		
Lubricants - Coolants		
1. Check the quantity of fuel	---	Add fuel
2. Check that fuel is not contaminated	---	Clean, drain
3. Check the quantity of hydraulic fluid	---	Fill with fluid
4. Inspect the hydraulic fluid filter	---	Drain, clean
5. Check the quantity of oil in each reduction gear	---	Fill with oil
6. Check the quantity of engine oil	---	Fill with oil
7. Check the quantity of coolant	---	Fill with water
8. Check the filter restriction indicator (dust)	---	Clean or change
Electrical equipment		
9. Check the battery terminals and wiring for tightness and corrosion	---	Tighten or change
10. Check the alternator terminals and wiring for tightness and corrosion	---	Tighten or change
11. Check the starter motor terminals and wiring for tightness and corrosion	---	Tighten or change
OTHER POINTS TO CHECK		
Hydraulic system - Mechanical equipment		
12. Abnormal noise or smell	---	Repair
13. Check for oil leaks	---	Repair
14. Air in the system	---	Bleed the air
Electrical system - Electrical equipment		
15. Check the battery voltage (with engine shut down)	23-26 V	Change
16. Check the quantity of fluid in the battery	---	Add or change
17. Make sure that the cables are not discolored, burnt or stripped	---	Change
18. Check for missing or loose cable retaining clips	---	Repair
19. Check for dampness on cables (especially on connectors and terminals)	---	Disconnect and dry if damp
20. Check fuses for condition and corrosion	---	Change
21. Check the alternator voltage (with engine speed above the throttle control mid-point) (when battery charge is insufficient, there can be 25 V only at start up)	27.5-29.5 V	Change
22. Noise from battery relay (with starter motor ON or OFF)	---	Change

PREVIEW - YOUFIXTHIS.COM

KHR31637-E

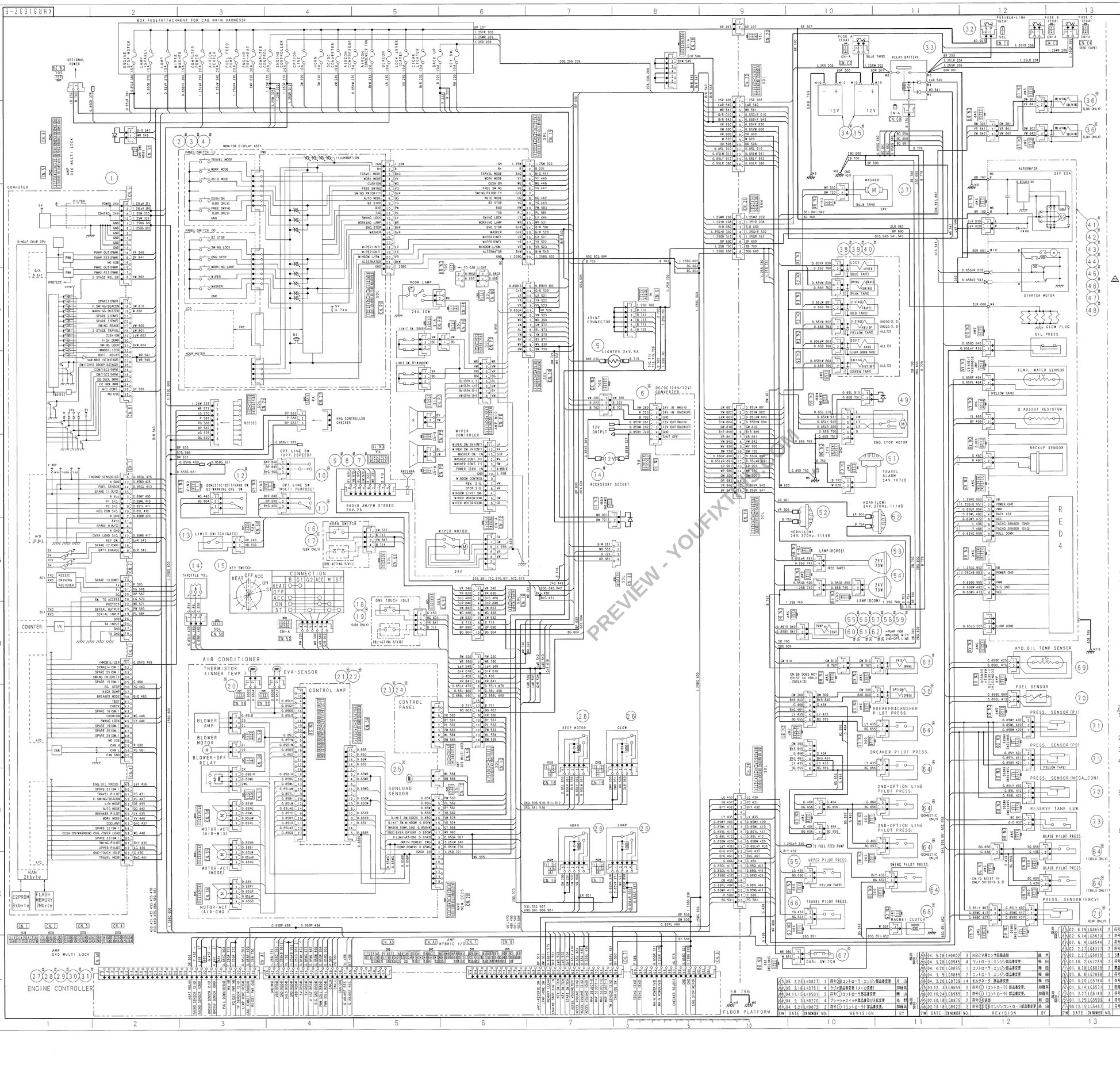

PART NO.	DESCRIPTION	SYM	MATERIAL GROUP	QTY	TOTAL WT.(kg)	STANDARD NO.	REMARKS
KHR26793Y-B	CONT:SPL コントロール(輸出)		1	1	-		NIPPON SEIKI 日精機
# KHR13825X-B	MONITOR モニタ ディスプレイ(国内) ASSY	2	(1)	1	-		NIPPON SEIKI 日精機
# KHR13826X-B	MONITOR モニタ ディスプレイ(EXP) ASSY	3	(2)	1	-		NIPPON SEIKI 日精機
# KHR13827X-B	MONITOR モニタ ディスプレイ(NA) ASSY	4	(3)	1	-		NIPPON SEIKI 日精機
KHR24888X-A	LIGHTER:CIGAR シガーライター			1	-		MITSUBO JIDOUSYA 自動車機器(三宝)
KHR24477Y-B	CONVERTER:DC-DC コンバータ DC-DC	6	OPT(1, 2, 3)	1	-		FUKU DENKI 福電機
KHR13824X-A	RADIO SET ラジオ(3) AM/FM ST (12/24V)	7	(1)	1	-		ESPERIA エスペリア
# KHR13771X-A	RADIO SET ラジオ(3) AM/FM ステレオ	8	LESS OPT(2) (3)	1	-		ESPERIA エスペリア
# KHR13945Y-A	RADIO SET ラジオ(3) AM/FM ステレオ(EXP)(12/24V)	9	(3)	1	-		YOSHIN ヨシン
KHR13129X-B	SWITCH:SPL スイッチ ロック(2段位)	10	OPT(1, 2, 3)	1	-		YOSHIN ヨシン
# KHR12948X-B	SWITCH:SPL スイッチ ロック(3段ライン)	11	OPT(1, 2, 3)	1	-		YOSHIN ヨシン
KHR13156	SWITCH:SPL スイッチ ロック(電磁弁)	12	(3)	1	-	KHR25195X-B	YOSHIN ヨシン
KHR18737X-A	SWITCH:LIMIT スイッチ リミット	13		1	-		NILES PARTS ナイルス部品
KHR27517X-B	SWITCH:SPL スイッチ ブロック(3)	14		1	-		TAKARA JUSHI 宝工業(株)(ジュシ事業所)
KHR13078	SWITCH:STARTER スイッチ:スタータ 8接	15	(3) (1, 2)	1	-	KHR13770X-B KHR13771X-B	MITSUBO JIDOUSYA 自動車機器(三宝)
KHJ11556X-B	KNOB ノブ(E)	16		1	-		NISHIYAWA ニシヤワ
KHJ1953	KNOB ノブ(E) スエイッチ	17	OPT(3)	1	-	KHJ1745X-B	NISHIYAWA ニシヤワ
KHJ11557X-B	KNOB ノブ(G)	18		1	-		NISHIYAWA ニシヤワ
KHJ11954X-B	KNOB ノブ(E) スエイッチ	19	OPT(3)	1	-		NISHIYAWA ニシヤワ
KHR2762	SENSOR:SPL センサ ON-OFF	20	OPT(1, 3) STD(1)	1	-	KHR2755X-A	SANDEN サンデン
KHR4135	UNIT ユニット エアコン	21	OPT(1, 3) STD(1)	1	-	KHR4132Y-A	SANDEN サンデン
KHR4136	UNIT ユニット ヒータ	22	OPT(2) STD(3)	1	-	KHR4133Y-A	SANDEN サンデン
KHR2758	PANEL:CONTROL パネルコントロール(A)	23	OPT(2, 3) STD(1)	1	-	KHR2755Y-A	SANDEN サンデン
KHR3132	PANEL:CONTROL パネルコントロール(B)	24	OPT(2) STD(3)	1	-	KHR3131Y-A	SANDEN サンデン
KHR2777	SENSOR:SPL センサ 8接	25	OPT(1) STD(1), OPT(3)	1	-	KHR3133Y-A KHR2786X-A	SANDEN サンデン
KHR12138E-B	RELAY:SPL リレー(ミニタイプ-6-)	26		4	-		MITSUBO JIDOUSYA 自動車機器(三宝)
KNH10010	CONT:SPL ENGINE コントロール エンジン	27	SH120(1, 2)	1	-	KNH0892X-C	ISUZU いすゞ(ベプセル)
KBH10560	CONT:SPL ENGINE コントロール エンジン	28	210LX(3) SH200(1, 2)	1	-	KRH1633X-C	ISUZU いすゞ(ベプセル)
KBH10030	CONT:SPL ENGINE コントロール エンジン	29	240LX(3) SH240(1, 2)	1	-	KBH0075X-C	ISUZU いすゞ(ベプセル)
KLH10010	CONT:SPL ENGINE コントロール エンジン	30	160LX(3)	1	-	KLH0238X-C	ISUZU いすゞ(ベプセル)
KRH10010	CONT:SPL ENGINE コントロール エンジン	31	280LX(3)	1	-	KRH1004X-C	ISUZU いすゞ(ベプセル)
KRH1592	FUSE ヒューズ (ヒューズボックス)	32			-	KRH1589C-A	MITSUBO JIDOUSYA 自動車機器(三宝)
KRH12141E-A	RELAY:BATTERY リレー(バッテリー)	33			-		FUJI DENKI 富士電機
# KRS1156Y-A	BATTERY バッテリ 端子無	34	130, 160LX(3) (1, 2)	2	-		UASA COMP. ユアサ コーポレーション
# KRH15330E-A	BATTERY バッテリ WITH 145FS1	35	210~280LX(3)	2	-		FURUKAWA DENCHI 古河電池
# KRJ3557U-A	VALVE:SOLENOID バルブ:ソレノイド	36	OPT(1, 2)	3	-		NISHINA 仁科工業
KHN16398-A	TANK:WASHER タンク:ウォッシャ	37		1	-		PRESS KOUGYOU プレス工業(P工)
# KRJ1781Y-B	VALVE:SOLENOID バルブ:ソレノイド (2段)	38	SH120(1, 2)	1	-		UCHIDA YUATSU 内田油圧
# KRJ1304X-B	VALVE:SOLENOID バルブ:ソレノイド (2段)	39	SH240(1, 2) SH200(1, 2)	1	-		UCHIDA YUATSU 内田油圧
# KHJ11972X-B	VALVE:SOLENOID バルブ:ソレノイド (2段)	40	(3)	1	-		UCHIDA YUATSU 内田油圧
# KNH0933	ENGINE:DIESEL エンジン:ディーゼル (3段)	41	SH120(1) SH200(1)	1	-	KNH0930X-C KNH0933X-C	ISUZU いすゞ
# KRH1639	ENGINE:DIESEL エンジン:ディーゼル (3段)	42	SH200(1) SH240(1)	1	-	KRH1633X-C	ISUZU いすゞ
# KBH11008	ENGINE:DIESEL エンジン:ディーゼル (3段)	43	SH240(1) SH200(1)	1	-	KBH1008X-C KBH1009X-C	ISUZU いすゞ
# KNH0934	ENGINE:DIESEL エンジン:ディーゼル (3段)	44	130LX(3)	1	-	KNH0931Y-C	ISUZU いすゞ
# KLH0241	ENGINE:DIESEL エンジン:ディーゼル (3段)	45	160LX(3)	1	-	KLH0240Y-C	ISUZU いすゞ
# KRH1640	ENGINE:DIESEL エンジン:ディーゼル (3段)	46	210LX(3)	1	-	KRH1635X-C	ISUZU いすゞ
# KBH11009	ENGINE:DIESEL エンジン:ディーゼル (3段)	47	240LX(3)	1	-	KRH1007X-C	ISUZU いすゞ
# KBH11010	ENGINE:DIESEL エンジン:ディーゼル (3段)	48	280LX(3)	1	-	KBH1004X-C	ISUZU いすゞ
KRH0676	MOTOR:STOP モータ(24V)	49		1	-	KRH1333X-C	ISUZU いすゞ
	MISSING NUMBER 欠番	50					
KHR38520-A	ALARM:SPL アラーム音	51		1	-		MITSUBO JIDOUSYA 自動車機器(三宝)
KHR24237X-B	HORN ホーン 警報 (LOW)	52		2	-		MITSUBO JIDOUSYA 自動車機器(三宝)
KHR24751X-B	LAMP:WORKING ライト:ワーキング 24V X 70W	53		1	-		SUZUKI YOUHIN 鈴鈴油
KHR09537E-A	LAMP:WORKING ライト:ワーキング	54		1	-		SPK スパーク(ライト-A)
# KNJ2900X-B	PUMP:HYD. ポンプ:油圧 フランジ# SH120-32RV	55	SH120(1, 2)	1	-		UCHIDA YUATSU 内田油圧
# KBJ6159X-B	PUMP:HYD. ポンプ:油圧	56	280LX(3)	1	-		KAWASAKI 川崎工
# KBJ2789Y-B	PUMP:HYD. ポンプ:油圧	57	SH220(1, 2)	1	-		KAWASAKI 川崎工
# KLJ0605Y-B	PUMP:HYD. ポンプ:油圧	58	160LX(3)	1	-		UCHIDA YUATSU 内田油圧
# KBJ2895X-B	PUMP:HYD. ポンプ:油圧	59	280LX(3)	1	-		KAWASAKI 川崎工
#※ KNJ2957X-B	PUMP:HYD. ポンプ:油圧 2段#3軸 フランジ無	60	SH120(1)	1	-		UCHIDA YUATSU 内田油圧
#※ KBJ6336X-B	PUMP:HYD. ポンプ:油圧	61	SH200(1)	1	-		KAWASAKI 川崎工
#※ KBJ2848X-B	PUMP:HYD. ポンプ:油圧	62	SH220(1)	1	-		KAWASAKI 川崎工
# KHJ0653U-A	VALVE:SOLENOID バルブ:ソレノイド	53	(3)	1	-		NISHINA 仁科工業
※ KHR10700-B	SWITCH:PRESS スイッチ:プレッシャ (0.49MPa)	64	SEE NOTE 注記参照	4	-		NAGANO KEIKI 長野計器
KHR10800	SWITCH:PRESS スイッチ:プレッシャ (1.18MPa)	65			-	KHR10790-B	NAGANO KEIKI 長野計器
KHR10810	SWITCH:PRESS スイッチ:プレッシャ (1.96MPa)	66		1	-	KHR10790-B	NAGANO KEIKI 長野計器
※ KHR2594	RECIEVER:DRIER レシーバ:ドライヤ	67	OPT(2, 3) STD(1)	1	-	KHR30733-A KHR42543-A	SANDEN サンデン
※ KHR3157	COMPRESSOR コンプレッサ 12V	68	OPT(2, 3) STD(1)	1	-	KHR27845Y-A	SANDEN サンデン
KHR2433X-B	SENSOR:THERMO センサ:サーモ	69		1	-		ISUZU SIKOKU いすゞ自動車四国(ブンソー)
KHR14107Y-A	SENSOR:FUEL センサ:フューエル	70		1	-		KANSEI カンセイ
※ KHR29147-B	SENSOR:PRESS センサ:プレッシャ (50MPa)	71	OPT(2) STD(1, 3)	3 2	-		NAGANO KEIKI 長野計器
KHR29155-B	SENSOR:PRESS センサ:プレッシャ (5MPa)	72			-		NAGANO KEIKI 長野計器
KHR10221	SWITCH:LEVEL スイッチ:レベル ソケット	73		1	-	KHR10220Y-A	ISUZU SIKOKU いすゞ自動車四国(ブンソー)
# KHR25015Y-A	SOCKET ソケット アクセサリ(DC12V)	74	(3)	1	-		TOKAI RIKA 東海理化

注記/NOTES

1) 本回路図は、SH120-3、SH160-3(一般海外)、SH200-3、SH240-3(国内・一般輸出)SH290-3(一般海外)、及び130LX、160LX、210LX、240LX、280LX(LBX)に対応する。
THIS CIRCUIT IS FOR SH120-3, SH160-3(GENERAL EXPORT), SH200-3, SH220-3(DOMESTIC·GENERAL EXPORT) SH290-3(GENERAL EXPORT), AND 130LX, 160LX, 210LX, 240LX, 280LX(LBX).

2) ※は、オプション部品を示す
※ IS OPTIONAL PART.

3) #は、機種又は仕向地によって適用される部品を示す。
IS APPLICABLE PART ACCORDING TO MODEL OR TERRITORY.

4) 括弧内の数値は適用される仕向地を示す(下記参照)。
THE NUMBER IN () MEANS APPLICABLE TERRITORY(SEE FOLLOWS).
1:国内/DOMESTIC
2:一般輸出/GENERAL EXPORT
3:LBX

5) 符号 ※9 の使用個数は下記の通りである。
THE NUMBER OF USE OF MARK ※9 IS SHOWED AS FOLLOWS.
国内/DOMESTIC ·····STD:1, OPT:3
一般輸出/GENERAL EXPORT·····STD:1, OPT:1
130LX(LBX) ·····STD:1, OPT:3
160.210.240.280LX(LBX)···STD:1, OPT:1

6) 図中に於けるアース記号及び配線交差図は下記の通りである。
EARTH LINE SYMBOLS AND CROSS POINT OF LINES IN THIS DRAWING SHOWS THE FOLLOWING.

直接 DIRECT	点灯ハーネス BODY EARTH	アース兼用 EARTH WITH CABLE	点検窓用取付る CONNECTED EACH OTHER	点検窓用非接続 NOT CONNECTED EACH OTHER

7) 配線図上の記号は電線色を示し記号前に付記した数値は図面番号 及び電線の断面積を示す。図示以外は0.5sqである。
THE SYMBOL AT EACH LINE SHOWS COLOR OF CABLE AND THE FIGURE BEFORE THE SYMBOL SHOWS THE CIRCUIT No. AND THE AREA OF CABLE. THE AREA OF CABLE NOT INDICATED IS 0.5 mm².

例 EX. 断面積 AREA 60 | 線色 COLOR B | 回路番号 CIRCUIT NO. 001

8) コネクタ表示は下記の通りである。
THE SYMBOL OF CONNECTOR IN THIS DRAWING SHOWS THE FOLLOWING.

メス端子 FEMALE TERMINAL / オス端子 MALE TERMINAL / SWP CN

コネクタ名称 CONNECTOR'S NAME / コネクタNo. CONNECTOR No.

色記号表
TABLE OF COLOR SYMBOLS

記号 SYMBOL	色 COLOR	記号 SYMBOL	色 COLOR
B	黒 BLACK	R	赤 RED
W	白 WHITE	Y	黄 YELLOW
Br	茶 BROWN	Lg	若葉 LIGHT GREEN
P	桃 PINK	Sb	空色 SKY BLUE
V	紫 VIOLET	L	青 BLUE
G	緑 GREEN	Gr	灰 GRAY
O	橙 ORANGE		

あわせ 色Aの電線下地に 色Bのひとスライプを施す。
例) BR: 茶の下地に 赤のストライプ。
in MEANS CABLE COLOR A STRIPED BY B.
Ex.) BR MEANS CABLE COLOR BLACK STRIPED BY RED.

REVISION 改訂
21
DATE 2005. 2. 23

△ '05年3月版~

改訂記号	内容	日付	承認	作図
△	05. 2.23 LH0827 1 符号⑪コントローラ・エンジン部品変更	片 山		
△	05. 2.18 LH0751 4 ラジオ部品変更(メーカ変更)	加藤英		
△	04.11.15 LH0501 2 符号①コントローラ部品変更	南 山		
△	04. 9. 3 LH0270 4 プレッシャスイッチ部品番号の設定変更	片 野		
△	04. 6.21 LH0072 2 符号④(コントローラ)部品変更。	加藤英		
△	04. 5.26 LH0002 3 HBCV用センサ回路追加	金 丈		
△	04. 5.26 LG0945 4 コントローラ・エンジン部品変更	梅 田		
△	04. 4.20 LG0895 4 コントローラ・エンジン部品変更	梅 田		
△	04. 3. 5 LG0865 2 コントローラ・エンジン部品変更	梅 田		
△	04. 2.20 LG0739 1 4 オルタネータ、部品番号変更	梅 田		
△	03.12. 3 LG0659 2 符号①(コントローラ)部品変更。	加藤英		
△	02.10.24 LG0965 2 符号①(コントローラ)部品変更。	加藤英		
△	02.10.18 LG0875 2 符号④追加	松 田		
△	02.10.18 LG0922 2 符号⑪⑫⑬エンジンコントローラ部品番号変更	古 田		
△	02. 6.19 LG0554 2 符号①(ECU)部品番号変更。	白 山		
△	02. 6.14 LG0543 2 符号⑪⑫部品番号変更	加藤英		
△	02. 6. 4 LG8544 2 符号⑪⑫部品番号変更	否		
△	02. 2.27 LG8377 2 符号⑪(コントローラ)部品番号変更。	加藤英		
△	02. 2.27 LG8028 5 6速Hパイプ、結成ボス、オルタネータ電線径変更	松 田		
△	01.10. 2 LG7269 2 符号⑪(コントローラ)部品番号変更。	加藤英		
△	01. 8.20 LG8278 2 電磁ピン形状変更	否 田		
△	01. 8. 6 LG7098 2 符号⑪(コントローラ)部品変更。	加藤英		
△	01. 6.20 LG5784 6 符号⑪⑫(走行ラーム)部品番号変更。	加藤英		
△	01. 6.14 LG5531 7 図面追加及び削除	児矢野		
△	01. 2.27 LG5149 2 符号①(コントローラ)部品変更。	加藤英		
△	01. 1.25 LG5559 4 符号⑪⑫(モニター)部品番号変更。	加藤英		
△	00.12.15 LG5487 3 符号⑪(コントローラ)部品番号変更。	加藤英		

SUMITOMO (S.H.I) SUMITOMO CONSTRUCTION MACHINERY CO.,LTD.

MODEL	SEE NOTE 注記参照
GROUP	COMMON 共 通
CODE	DZ1701
WEIGHT(kg)	-
H.T. (SEE NOTE)	-
PAINT	NN
DRAWN	
CHK'D	
INSP.	
APPR.	
SCALE	-
DATE	2000. 9. 19
NAME	ELECTRIC CIRCUIT DRAWING 回路図・電気 (RV・一般輸出・LBX)
DWG NO.	KHR31637-E

CUSTOMER	MFG NO.	QTY
PRODUCTION QTY 個付		
DATE 2000. 9. 19	初年度	

次年図番	KHR27002-E
前年図番	

注文部品番号表示 (○:あり ×:なし)	有	無
	○	

塗装区分	名	千	LB	分	双

Download full manual at youfixthis.com

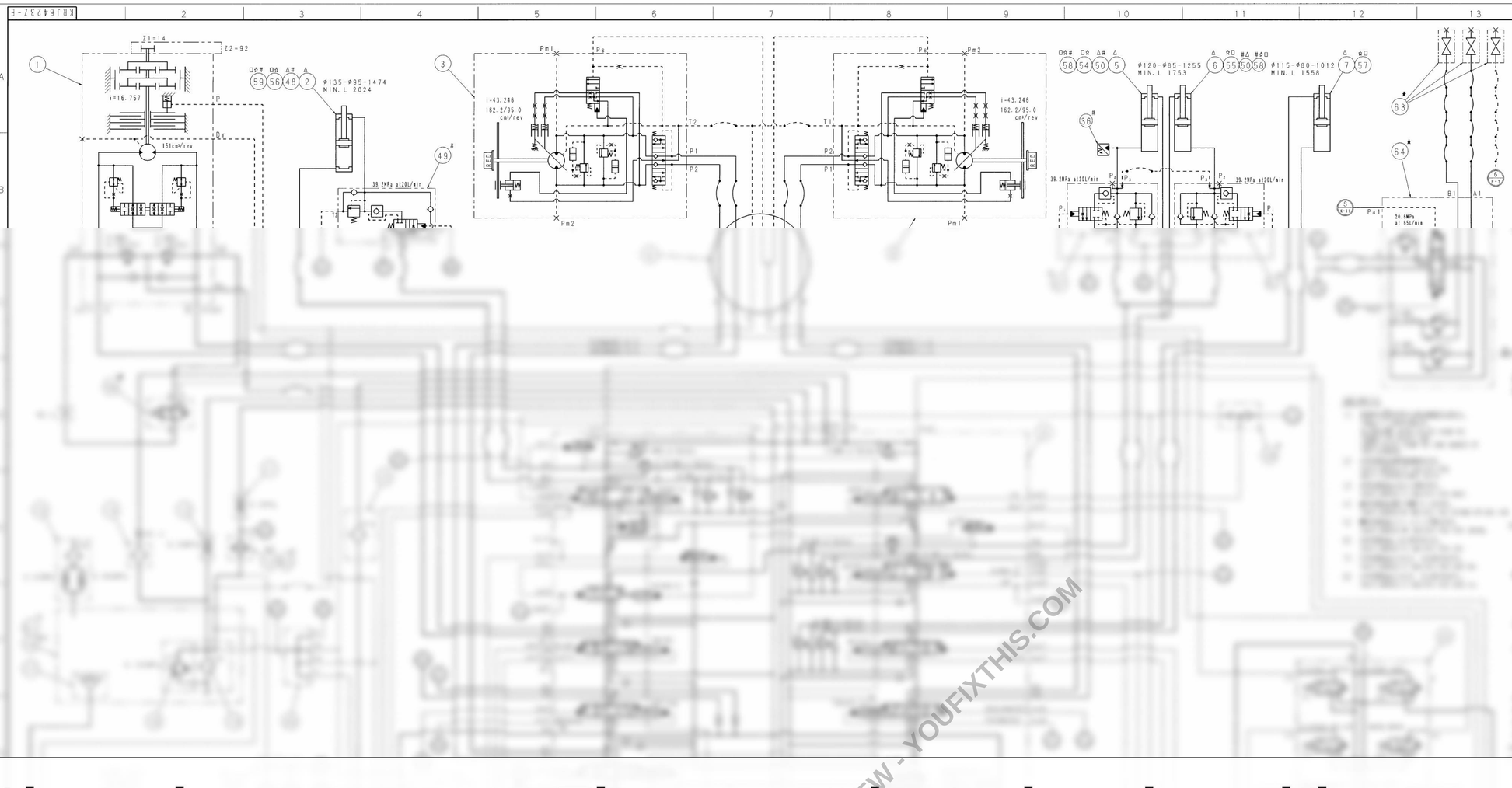

PART NO.	DESCRIPTION	SYM	MATERIAL GROUP	QTY	TOTAL WT. (kg)	STANDARD NO.	REMARKS
KRC01862-C	RED. GEAR:SWING ASSY	1		1	.		
KRV3011X-B	CYL.:ARM	2		1	.		KAYABA
KRA1902X-A	MOTOR:TRACTION UNIT	3		2	.		KAYABA
KRA1875X-C	JOINT:CTR	4		1	.		
KRV3085X-B	CYL.:BOOM(L)	5		1	.		KAYABA
KRV3084X-B	CYL.:BOOM(R)	6		1	.		KAYABA
KRV3129X-B	CYL.:BUCKET	7		1	.		KAYABA
	MISSING NUMBER	8					
KRJ10420-B	VALVE:CONTROL	9		1	.		KAYABA
KHJ0568U-A	FILTER:LINE	10		1	.		YAMASHIN
KRJ3823	VALVE:CHECK	11		1	.	KNJ1621U-A	YAMASHIN
KRH1374X-A	RADIATOR	12		1	.		TOYO RADIATOR
KRJ3515Y-A	VALVE:CHECK	13		1	.		YAMASHIN
KHJ1400X-A	FILTER:SPL	14		1	.		SUMITOMO
KRJ1491X-A	BREATHER:AIR	15		1	.		YAMASHIN
	TANK:SUMP DELIVERY SPEC						

Blurred on purpose. The manual you buy has this page in full quality.
PREVIEW - YOUFIXTHIS.COM
Download full manual at youfixthis.com

210LX Crawler Excavators
Table of Contents

DIVISION/SECTION		SECTION N°	REFERENCE N°
1	**GENERAL INFORMATION**		
	Safety, general information and standard torque data	1001	7-27690LX
	General specifications and special torque setting	1002	7-29360-21LX
2	**ENGINE**		
	Removal and installation of the engine	2000	7-28230LX
	Radiator and oil-cooler	2001	7-28050LX
3	**FUEL SYSTEM**		
	Removal and installation of the fuel tank	3001	7-27970LX
4	**ELECTRICAL SYSTEM**		
	Electrical system, electrical and electronic troubleshooting	4001	7-28250-21LX
	Inspection and maintenance of batteries and connecting a booster battery	4002	7-27921LX
	Main and engine electronic control boxes	4003	7-27931-21LX
5	**UNDERCARRIAGE**		
	Removal and installation of the tracks set	5001	7-27750LX
	Upper and lower rollers	5003	7-27770-21LX
	Sprocket	5004	7-27781LX
	Idler wheel and tension shock absorber	5005	7-27801-21LX
6	**DRIVE TRAIN**		
	Drive motor and final drive transmission removal and installation	6001	7-27841LX
	Drive motor and final drive transmission disassembly and assembly	6002	7-28090LX
	Swing reduction gear, removal and installation	6003	7-27820LX
	Swing reduction gear, disassembly and assembly	6004	7-28370LX
7	**UNDERCARRIAGE HYDRAULICS**		
8	**UPPERSTRUCTURE HYDRAULICS**		
	Depressurising and decontaminating the hydraulic system, use of the vacuum pump and bleeding the components	8000	7-27951-21LX
	Specifications, troubleshooting, checks and hydraulic pressure settings	8001	7-28270-21LX
	Hydraulic sump tank removal and installation	8002	7-27990LX
	Main and pilot pumps, removal and installation	8003	7-27860LX
	Main hydraulic control valve, removal and installation	8004	7-27890LX
	Attachment cylinders, removal and installation	8005	7-27791LX
	Rotating joint, removal and installation	8006	7-27811LX
	Pilot blocs, removal and installation	8007	9-35590LX
	Swing motor, removal and installation	8008	7-28070LX
	Free swing disassembly and assembly	8009	9-35530LX
	Main hydraulic pump, disassembly and assembly	8010	7-35490LX
	Main hydraulic control valve, disassembly and assembly	8011	9-36270LX
	Attachment cylinders, disassembly and assembly	8012	7-27900-21LX
	Hand joystick control, disassembly and assembly	8013	7-28110LX
	Foot joystick control, disassembly and assembly	8014	7-28210LX
	Six stack solenoid valve, disassembly and assembly	8015	7-27910LX
	Cushion control, disassembly and assembly	8016	7-27940LX
	Hose burst check valve	8017	7-29630-21LX
	Rotating joint, disassembly and assembly	8018	7-28080LX
	Swing motor, disassembly and assembly	8019	7-28010LX
	Hydraulic functions	8020	7-28420-21LX

PREVIEW - YOUFIXTHIS.COM

Copyright © 2001 Link-Belt
Printed in U.S.A.
November 2001

SAFETY

This symbol means ATTENTION! BECOME ALERT! YOUR SAFETY IS INVOLVED. The message that follows the symbol contains important information about safety. Carefully read the message. Make sure you fully understand the causes of possible injury or death.

To prevent injury always follow the Warning, Caution and Danger notes in this section and throughout the manual.

Place a “Do not operate“ tag on the starter switch key before carrying out any service or repair work on the machine.

.

WARNING: *Read the operator’s manual to familiarize yourself with the correct control functions.*

WARNING: *Operate the machine and equipment controls from the seat position only. Any other method could result in serious injury.*

WARNING: *This is a one man machine, no riders allowed.*

WARNING: *Before starting engine, study Operator’s Manual safety messages. Read all safety signs on machine. Clear the area of other persons. Learn and practice safe use of controls before operating.*
It is your responsibility to understand and follow manufacturers instructions on machine operation, service and to observe pertinent laws and regulations. Operator’s and Service Manuals may be obtained from your Link-Belt dealer.

WARNING: *If you wear clothing that is too loose or do not use the correct safety equipment for your job, you can be injured. Always wear clothing that will not catch on objects. Extra safety equipment that can be required includes hard hat, safety shoes, ear protection, eye or face protection, heavy gloves and reflector clothing.*

WARNING: *When working in the area of the fan belt with the engine running, avoid loose clothing if possible, and use extreme caution.*

WARNING: *When doing checks and tests on the equipment hydraulics, follow the procedures as they are written. DO NOT change the procedure.*

WARNING: *When putting the hydraulic cylinders on this machine through the necessary cycles to check operation or to remove air from a circuit, make sure all people are out of the way.*

PREVIEW - YOUFIXIT.COM

DIVISION/SECTION	SECTION N°	REFERENCE N°
9 UPPERSTRUCTURE		
Upperstructure, turntable and counterweight	9002	7-27981-21LX
Boom, arm and bucket	9003	7-27961-21LX
Seat and safety belt	9004	7-28120LX
Cab and cab equipment	9005	7-28021-21LX
Air conditioning troubleshooting	9006	[redacted]
Air conditioning unit disassembly and assembly	9007	[redacted]
Air conditioning servicing	9008	[redacted]
Air conditioning components	9009	[redacted]
Large format hydraulic and electrical schematics	Pocket	7-28521

* *Consult the Engine Service Manual*

[redacted] *Sections to be distributed at a later date*

NOTE: Link-Belt Company reserves the right to make changes in the specification and design of the machine without prior notice and without incurring any obligation to modify units previously sold.

The description of the models shown in this manual has been made in accordance with the technical specifications known as of the date of design of this document.

PREVIEW - YOUFIXTHIS.COM

Section

2000

REMOVAL AND INSTALLATION OF THE ENGINE

PREVIEW - YOUFIXTHIS.COM

Copyright © 2001 Link-Belt
Printed in U.S.A
November 2001

2) Fuel consumption control

1. The engine electronic control box (6) calculates the target speed based on:
   - working mode data sent via CAN communications from the main electronic control box (5),

4) Engine stop control

When the engine stop signal is received (when the ignition switch is turned off or the emergency stop control (2) is operated), the engine electronic control box transmits the rack position signal "no injection" to the electronic acceleration and activates the engine

Blurred on purpose. The manual you buy has this page in full quality.

PREVIEW - YOUFIXTHIS.COM

Download full manual at youfixthis.com

Fuel Level

1) Circuit configuration

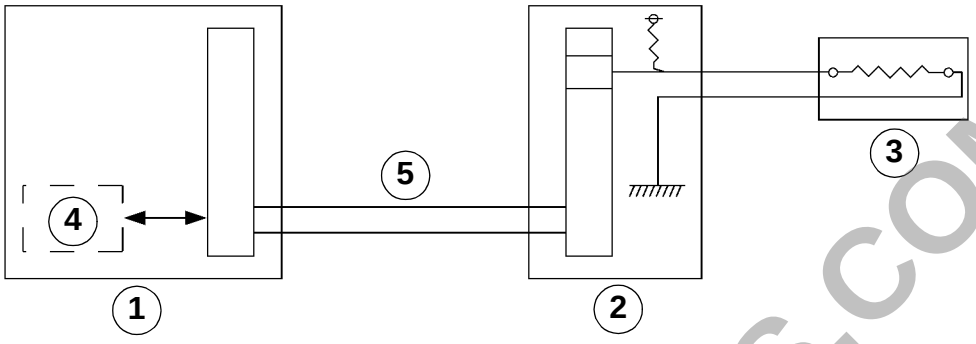

CM00F009

Remaining fuel (gal)	Fuel level sender resistor (Ω)	Input voltage (V)	Bars displayed
69.1-	10.0 - 18.1	0.455 - 0.766	8
61.5 - 69.1	18.1 - 23.9	0.766 - 0.964	7
50.2 - 61.5	23.9 - 29.6	0.964 - 1.142	6
38.8 - 50.2	29.6 - 36.5	1.142 - 1.337	5
27.5 - 38.8	36.5 - 46.3	1.337 - 1.582	4
13.5 - 27.5	46.3 - 60.8	1.582 - 1.891	3
6.7 - 13.5	60.8 - 74.7	1.891 - 2.138	2
- 6.7	74.7 - 80.0	2.138 - 2.222	1

1. Instrument panel
2. Main electronic control box
3. Fuel level sending unit
4. Fuel level indicator
5. Series connection

2) Operation

A. The fuel level sender (3) sends a signal to the main electronic control box (2).

B. The main electronic control box (2) calculates the number of bars to be displayed and sends the information to the fuel level gauge (4) via the Series connection (5).

C. When only one bar is displayed on the fuel level gauge (4), the message “LOW FUEL” appears on the instrument panel control screen (1) and the audible warning device sounds.

PREVIEW - YOUFIXTHIS.COM

Troubleshooting	Cause	Action
Troubleshooting using the diagnostic system Starting motor switch ON Failure code displayed in DIAG 1 — NO → To DIAG4 YES → Display E0031 — YES	Defective circuit in the regulator	Check the electronic regulator
NO → Display E0032 — YES	Problem with rack detector signal in regulator	Same as above
NO → Display E0041 — YES	Problem with TDC detector signal	Same as above
Failure code displayed in DIAG 4 YES → M00B0 — YES	Faulty engine electronic control box	Change the engine electronic control box
NO → M0010 — Check that the transistor output is not short circuited YES → To CHK2"		
Self-detection finds the short circuit YES → The failure code disappears after disconnecting the solenoid valve connector — YES	Defective solenoid valve	Change the solenoid valve
NO → The failure code disappears after disconnecting connector CN22 — YES	Short circuit on wire between CN22 and the solenoid valve	Repair the wiring
NO → The failure code disappears after disconnecting connector CN23 — YES	Short circuit on wire between CN23 and the solenoid valve	Repair the wiring
NO → The failure code disappears after disconnecting connector CN6 — YES	Short circuit on wire between CN23 and CN6	Repair the wiring
NO → The failure code disappears after disconnecting connector CN5 — YES	Short circuit on wire between CN22 and CN5	Repair the wiring
NO	Electronic control box defective	Change the electronic control box

PREVIEW - YOUFIXTHIS.COM

STEP 6

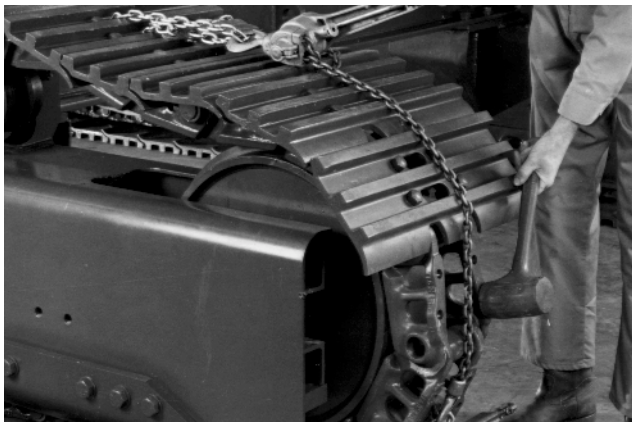

B5573689M

Connect suitable pulling equipment to both ends of the track chain. Operate the pulling equipment to pull both ends of the track chain together.

STEP 7

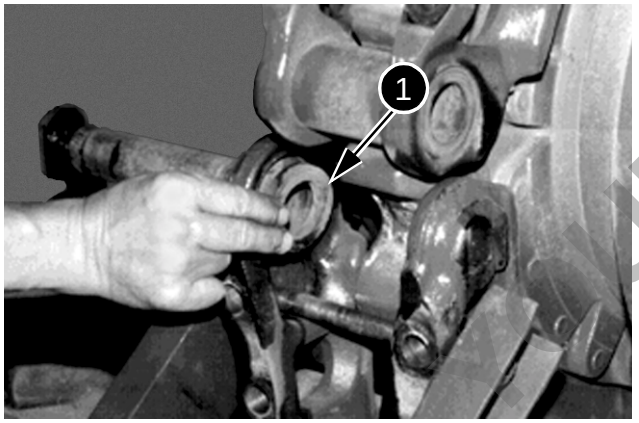

JD00278A

Install two spacers (1) in the two half links where the end of chain axle is assembled.

STEP 8

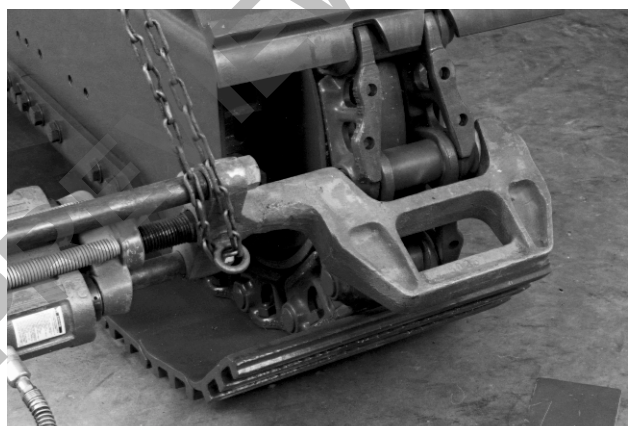

B5491989M

Install the end of chain axle with the portable hydraulic press K1P0013.

STEP 9

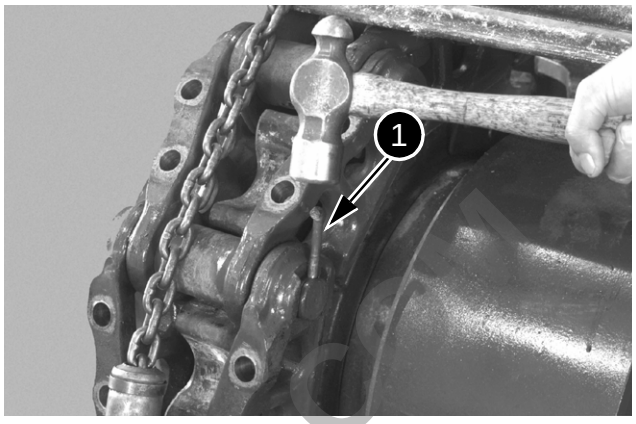

JD00284A

Remove the portable hydraulic press. Install a new pin (1) in the end of chain axle. Bend the ends of the pins to brake the end of chain axle.

STEP 10

Install the two track pads, the screws and the nuts.

STEP 11



B5171389M

Tighten the track pad screws to a torque (see the specifications).

STEP 12

See "Track tension adjustment" in this section and adjust the track tension.

PREVIEW - BUFIKTHIS.COM

DISASSEMBLY AND ASSEMBLY OF THE IDLER WHEEL

Description

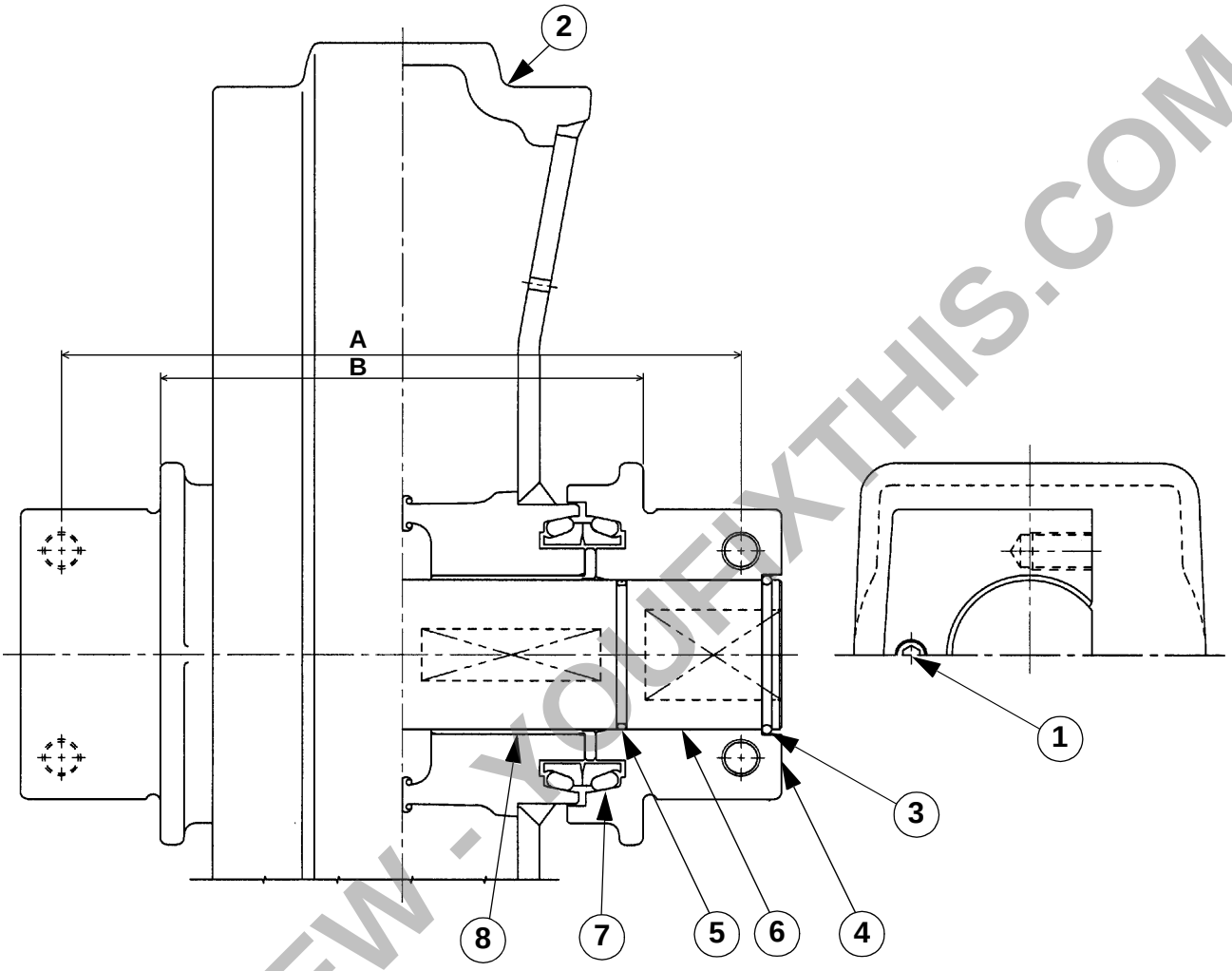

CS01B544

1 DRAIN PLUG
2 IDLER WHEEL
3 SNAP RING
4 HUB
5 O-RING
6 SHAFT
7 FACE SEAL
8 BUSHING

A ..... 11.16 to 11.24 inches
B ..... 7.86 to 8 inches

Reconditioning

If the idler wheel is worn to the indicated limits or if it shows traces of leaks, it must be reconditioned or changed. See section 1002 for limits of wear.

PREVIEW - YOUFIXTHIS.COM

Section

6003

REMOVAL AND INSTALLATION
OF THE SWING REDUCTION GEAR

PREVIEW - YOUFIXTHIS.COM

Copyright © 2001 Link-Belt
Printed in U.S.A.
November 2001

SPECIAL TOOLS

Tester



B877558M

1. *K1P0005 PRESSURE FITTING KIT*

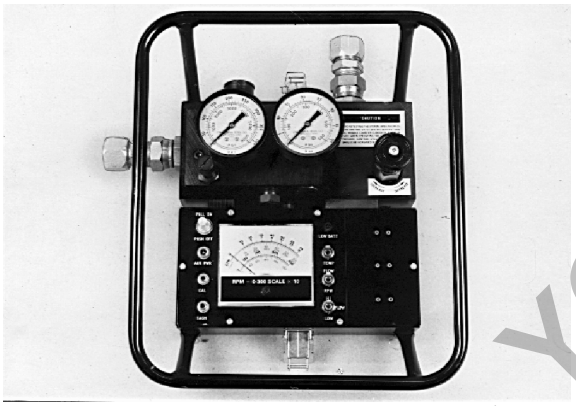

B785789R

2. *K1P0006 FLOW METER*

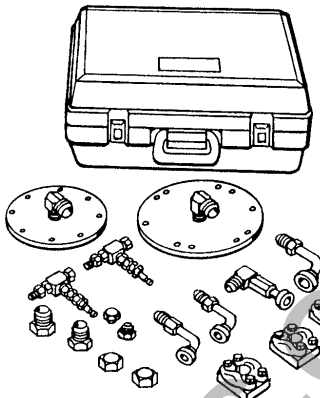

CS99B532

3. *SET OF UNIONS FOR PRESSURE TEST AND HYDRAULIC FLOW K1P0003.*

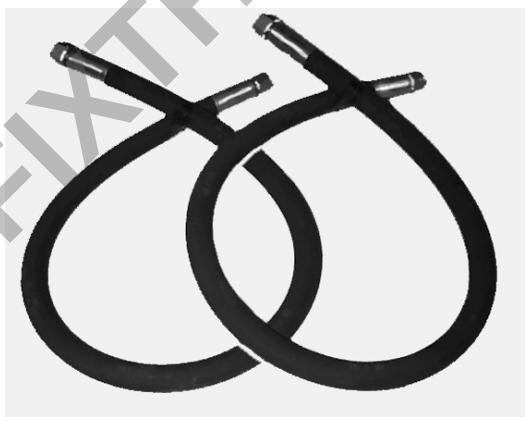

CD99C002

4. *SET OF HIGH PRESSURE HYDRAULIC HOSES K1P0011 (INCLUDING TWO HIGH PRESSURE HOSES).*

PREVIEW - YOUFIXTHIS.COM

SPECIFICATIONS

Filling capacity of the hydraulic sump tank	See Section 1002
Total capacity of the hydraulic system	See Section 1002
Hydraulic oil	See Section 1002
Weight	See Section 1002

SPECIAL TORQUE SETTINGS

Screw for fixing the hydraulic pump flange to the engine hand-wheel crankcase	See Section 1002
Screw for fixing the hydraulic sump tank cover	2 to 3.6 lb-ft (2.9 to 4.9 Nm)
Nuts for tightening the silencer retaining collars	29 lb-ft (39 Nm)
Screw for fixing the silencer bracket to the motor	47 to 55 lb-ft (64 to 74 Nm)
Dowel blocks retaining screw	151 to 166 lb-ft (205 to 225 Nm)
Splined sleeve locking screw	71 to 72 lb-ft (96 to 98 Nm)

PREVIEW - YOUFIXTHIS.COM

STEP 6

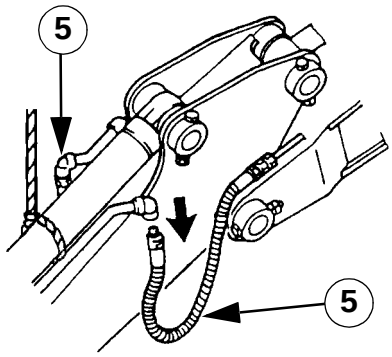

JS00612A

Start the vacuum pump. Disconnect the two hydraulic hoses (5) from the bucket cylinder. Plug the hydraulic hoses with plugs and the unions with caps. Stop the vacuum pump.

STEP 7

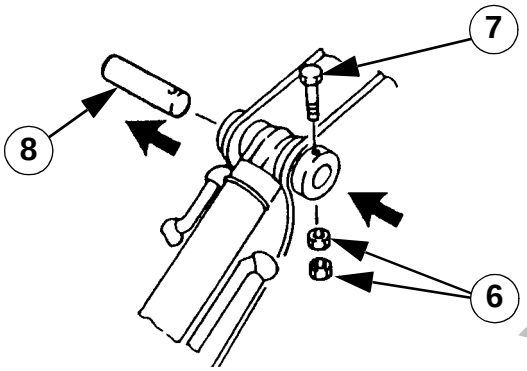

JS00613A

Remove the nuts (6) and the screw (7). Remove the arm pin (8).

STEP 8

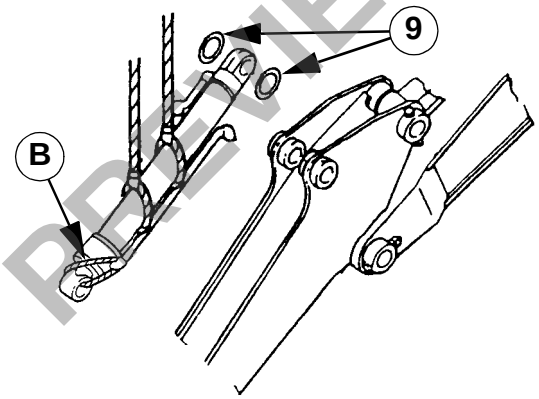

JS00614A

Carefully raise the bucket cylinder and move it away from the arm. Remove the shims (9). Place the bucket cylinder on suitable stands.

STEP 9

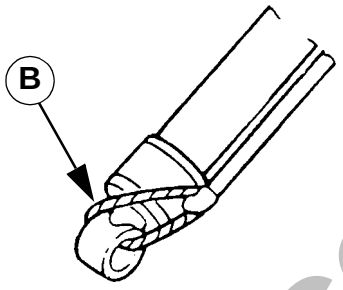

JS00586A

Remove the sling (B) which was holding the cylinder rod onto the cylinder barrel.

Installation

STEP 1

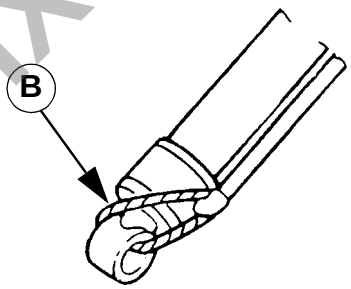

JS00586A

Attach a suitable strap (B) to the bucket cylinder to hold the cylinder rod onto the cylinder barrel.

NOTE: *Carefully raise the cylinder. The cylinder is heavy and its weight must be distributed over the slings when lifting.*

STEP 2

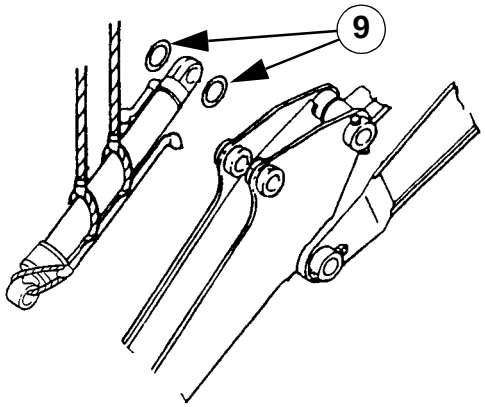

JS00614A

Install the bucket cylinder on the arm and install the shims (9).

PREVIEW - YOUFIXTHIS.COM

STEP 1

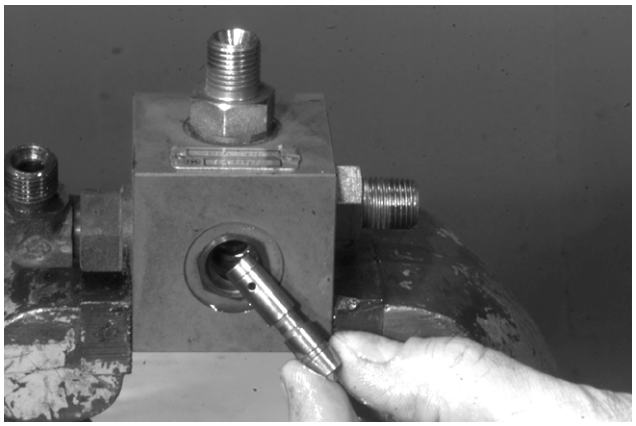

JD00738A

Install the spool (2) in valve body bore.

STEP 2

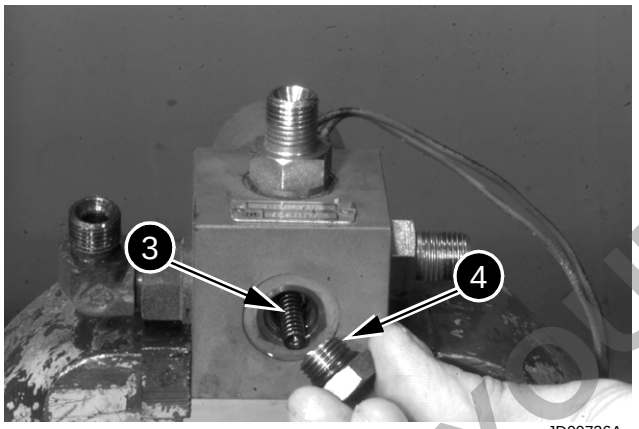

JD00736A

Install a new O-ring (4) on the plug. Install the spring (3) in the valve housing bore then install the plug. Tighten the plug securely.

STEP 3



JD00735A

Reposition the valve body in the vise. Install a new O-ring (11) in the valve body.

STEP 4

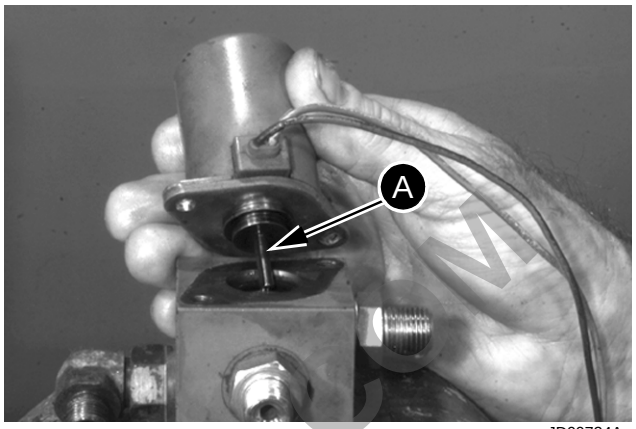

JD00734A

Install the actuating pin (A) in the solenoid. Install the solenoid on the valve body.

STEP 5

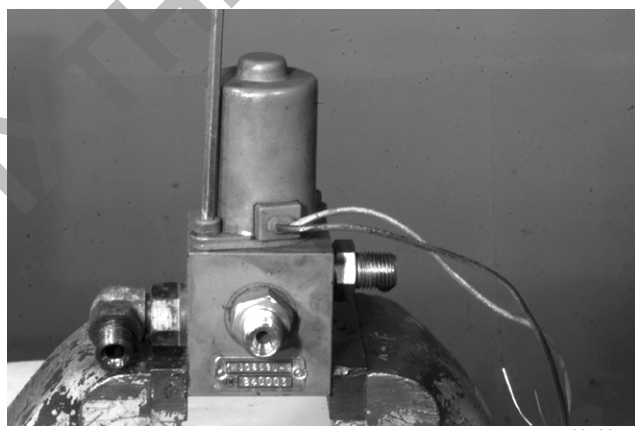

JD00733A

Install two socket head cap screws (10) to secure the solenoid (9) to valve body. Tighten the cap screws securely.

PREVIEW - YOUFIXTHIS.COM

STEP 8

Install the plug (91) equipped with an O-ring (64) on the long cap of the option section (see section G-G). Tighten to a torque of 14 to 16 lb-ft (19 to 22 Nm).

Plug assembly

STEP 1

Install the plug (60) equipped with an O-ring. Tighten to a torque of 76 to 83 lb-ft (103 to 113 Nm) (see section J-J).

STEP 2

Install the plug (61) equipped with an O-ring (62). Tighten to a torque of 29 to 32 lb-ft (39 to 44 Nm), (see section K-K).

STEP 3

Install the plug (63) in its port. Tighten to a torque of 10 to 13 lb-ft (14 to 18 Nm), (see section A1-A1).

STEP 4

Install the plugs (92) equipped with an O-ring. Tighten to a torque of 151 to 167 lb-ft (205 to 227 Nm).

STEP 5

Install the plugs (72) equipped with an O-ring. Tighten to a torque of 54 to 58 lb-ft (73 to 79 Nm).

Assembling the sections

STEP 1

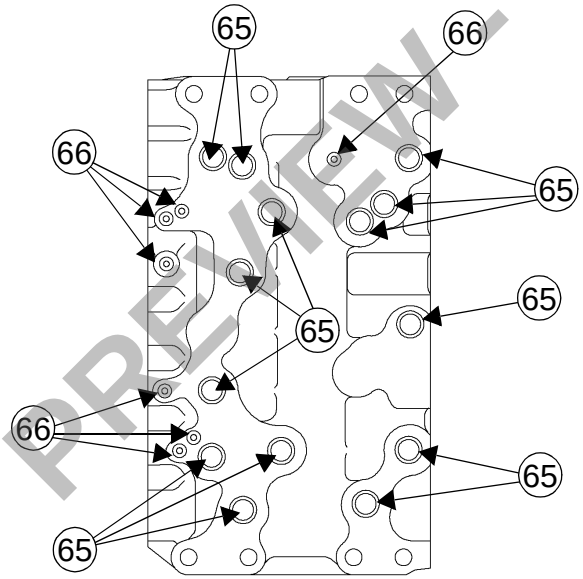

CI01K542

Install new O-rings (65) and (66).

STEP 2

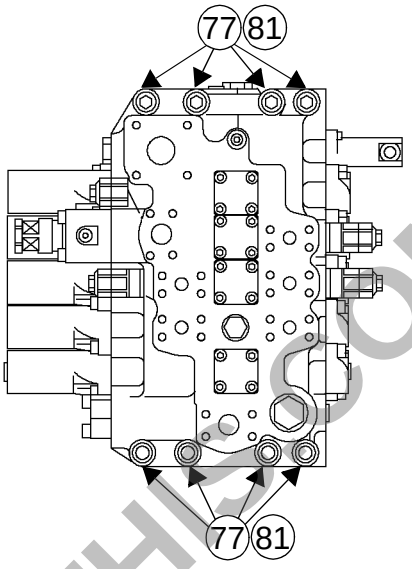

CI01K541

Assemble the two sections (1) and (13) using screws (77) and washers (81). Tighten to a torque of 123 to 130 lb-ft (167 to 177 Nm).

NOTE: *For installation of the control valve, see Section 8004.*

PREVIEW - YOUFIXTHIS.COM

STEP 15

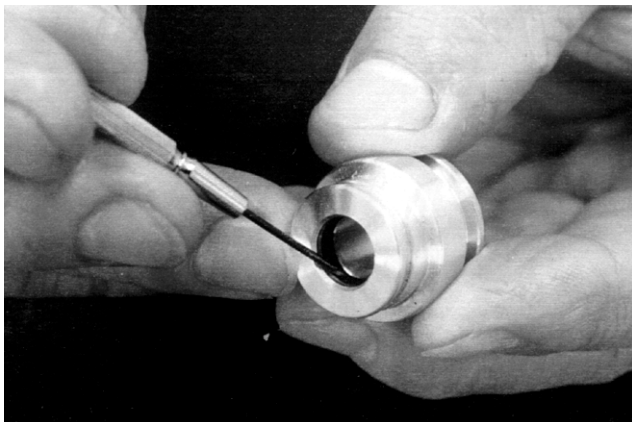

CD00G101

Remove and discard the plunger assembly seal.

STEP 16

Cleaning the components:

1. Soak them in a suitable cleaning solvent until contamination and oil are removed. Components can be damaged if they are washed while they are still contaminated.

2. Final washing: Immerse the components in a clean receptacle containing a suitable cleaning solvent. Impart a rotary motion to the receptacle so as to wash the inner surface of the components as well. Dry the components with a clean cloth.

NOTE: *Never dry them with compressed air. Dust and water contained in the air will damage and corrode their surfaces.*

3. Corrosion prevention: Apply an anti-rust product to all the components.

NOTE: *Components can rust if left in the open air after cleaning.*

Inspection

Change all the seals and O-rings which have been removed. Also change the washers on all screws which have been removed.

STEP 1

Inspect the spools to ensure that the finish is not damaged, that they are not bent or damaged in any other manner. Make sure that the spool slides freely in the control valve body bore. If defects are found, change the entire control valve.

STEP 2

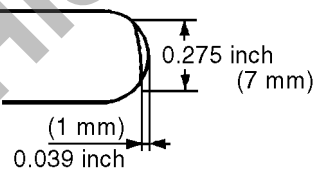

JS00784A

Inspecting the controls. Change the components if wear on the shaft pin and seal create play in the controls greater than 0.078 inch (2 mm) .

STEP 3

If it is impossible after inspection of the parts to determine the cause of an abnormal noise or a reduction in primary pressure, change the joystick control.

PREVIEW - YOUFIXTHIS.COM

Inspection

STEP 1

Clean all parts using suitable cleaning solvent. Immerse valve housing in cleaning solvent for several minutes to dissolve dirt or other foreign matter inside valve housing. Use low pressure compressed air to blow out any foreign matter from interior of valve housing. Dry parts using clean cloths.

STEP 2

Inspect springs for cracks, distortion, or evidence of permanent set. Replace a spring if any of these defects are observed.

STEP 3

Check the spools for cracks, holes, distortion or other damage. Check that the spools slide easily in the groove of the control valve housing. If any defects are observed replace the cushion valve.

STEP 4

Check the plugs, flow restriction adapters, and spring guides for damaged threads. Check the ports in flow restriction adapters for foreign matter, chipping, or other damage. Check spring guides for bent condition. Replace a defective part.

STEP 5

Check the spacer for chipping, wear and signs of damage. If any of these conditions are seen replace the spacer.

STEP 6

Check for damaged threads and signs of internal wear on the control valve housing. If any defects are seen, replace the cushion valve.

Assembly

NOTE: *The numbers in brackets in the following steps refer to the illustration on page 3.*

NOTE: *Lubricate all parts with clean hydraulic oil. Ensure that parts are assembled in the same groove as they were removed from.*

STEP 1

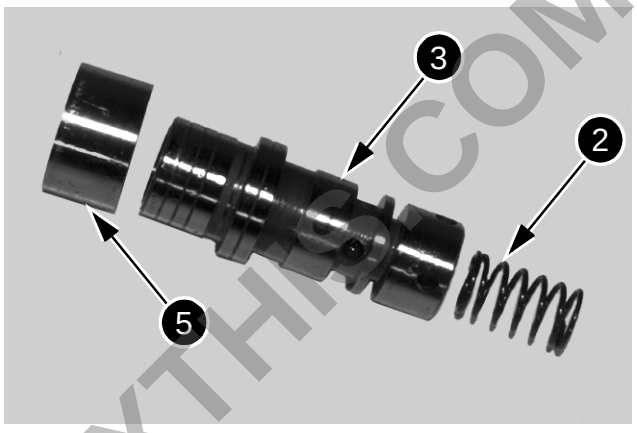

JD00559A

Install the spacer (5) on the spool (3).

STEP 2

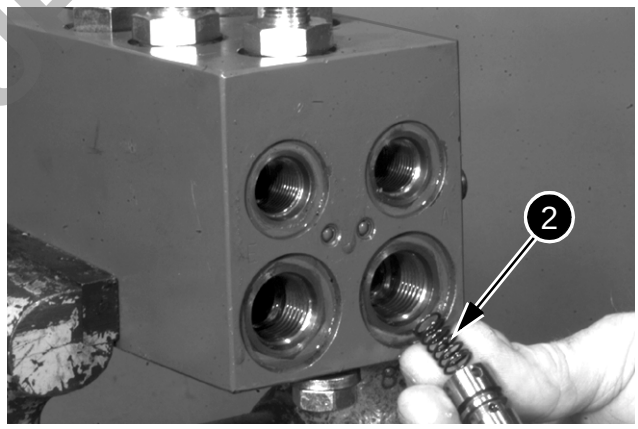

JD00560A

Install the spring (2), the spool (3) and the spacer (5) in the control valve housing.

PREVIEW - YOUFIXTHIS.COM

STEP 25

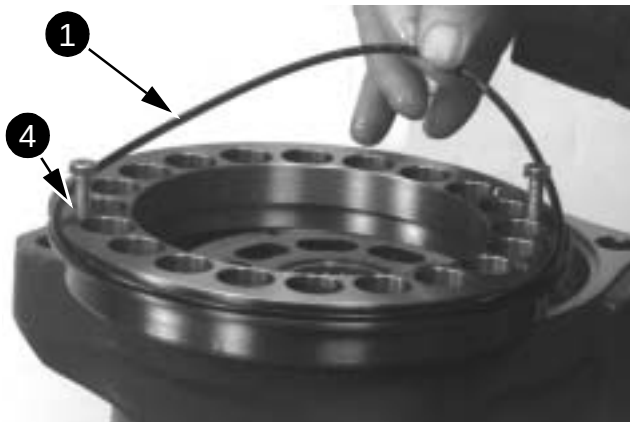

JD00414A

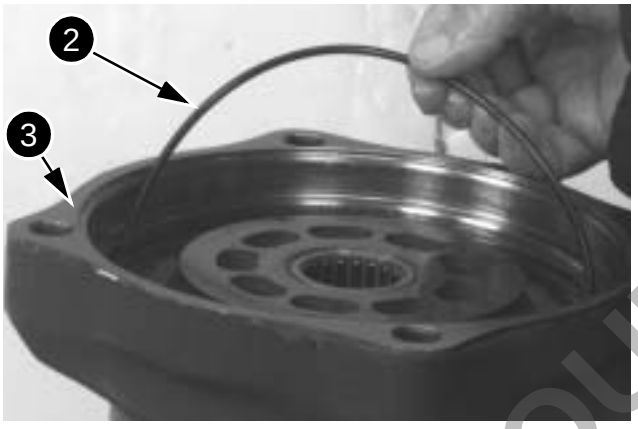

JD00415A

Remove the O-rings (1) and (2) from the swing motor housing (3) and the brake piston (4). Discard O-rings. Remove the two M6 screws from the brake piston.

STEP 26

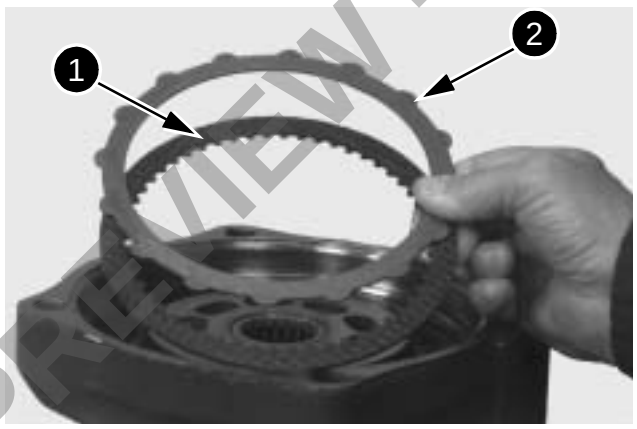

JD00416A

Remove the three friction plates (1) and the three disc plates (2) from the motor housing.

STEP 27



JD00417A

Remove the cylinder assembly from the motor housing.

STEP 28

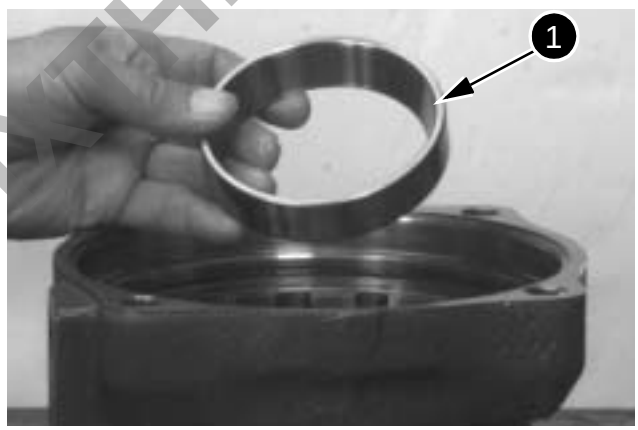

JD00418A

Remove the external bearing ring (1) from the motor housing.

STEP 29

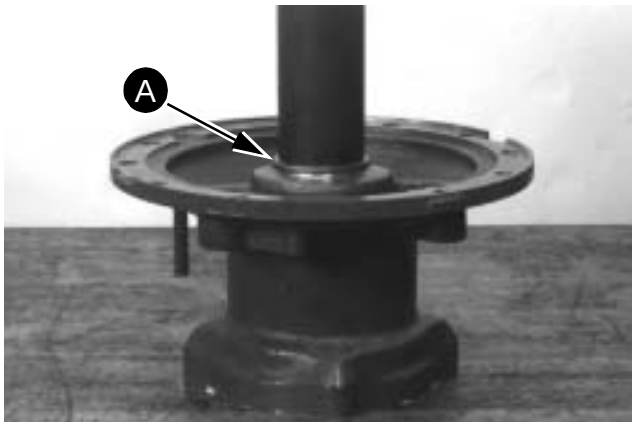

JD00419A

Position the motor housing in a press. With a sleeve or a suitable guiding pin, force the lip seal out of the housing. Discard the lip seal.

PREVIEW - YOUFIXTHIS.COM

Boom Raising Circuit

Two supply flows are used to raise the boom.

The P1 pump flow goes through the straight line travel valve or the right-hand travel spool, through the parallel working passage and the boom (2) spool, before emerging from the boom (1) spool outlet.

The P2 pump flow goes through the second parallel working passage and the boom (1) spool and joins the flow from pump P1 to go through the load holding valve and supply oil to the boom cylinders.

Pa8/A8. Boom up
Pb8/B8. Boom down
Pb4. Boom spool 2

PREVIEW - YOUFIXTHIS.COM

STEP 6

Attach a suitable lifting device to the bucket link (4) and place the bucket link in position on the arm. Install the bucket cylinder rod on the bucket link (4) and the guide link (15), see Section 8005. Install the grease fittings (10).

STEP 7

Install new dust seals (9) on the bucket link (4).

STEP 8

Install new dust seals (20) on the arm.

STEP 9

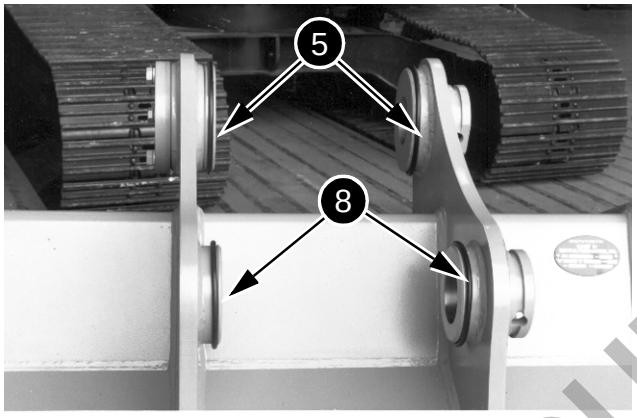

B9240128

Install new linkage seals (5) and (8) on the bucket bosses.

STEP 10

Start the engine and align the arm orifices with the orifices in the bucket.

STEP 11

Install the pin (2) through the bucket and the arm. Install the locking pin (1).

STEP 12

Align the orifices of the bucket link with the orifices in the bucket and install the pin (7) through the bucket and the bucket link. Install the locking pin (6).

STEP 13

Using a set of feeler gauges, check that the clearance between the bucket link and the bucket is 1 to 0.137 inch (3.5 mm). If necessary remove the locking pin (6) and the pin (7) and add or more shims (19) as required to arrive at the correct clearance. Install the pin (7) and the locking pin (6).

STEP 14

Push the linkage seals (5) and (8) into their housings.

STEP 15

Grease the linkages.

STEP 16

Carry out the shimming of the bucket, see page 6.

PREVIEW - YOUFIXTHIS.COM

PREVIEW ONLY

You're viewing 25 of 602 pages

The full manual includes:

- All 602 pages, complete
- Searchable PDF (find any keyword)
- No watermarks
- Instant download
- Print-ready quality

GET FULL MANUAL NOW

Link-belt 210LX Shop Manual

Scan or click anywhere
youfixthis.com

Click anywhere on this page to get the full manual