SPECIFICATIONS

Engine

Make ..... Isuzu
Model BB-6BG1T

Type: Four stroke, water-cooled, overhead valve, direct injection (electronically controlled), in-line engine with

PREVIEW - YOUFIXTHIS.COM

Blurred on purpose. The manual you buy has this page in full quality.

Download full manual at youfixthis.com

ENGINE

Removal and installation

STEP 1

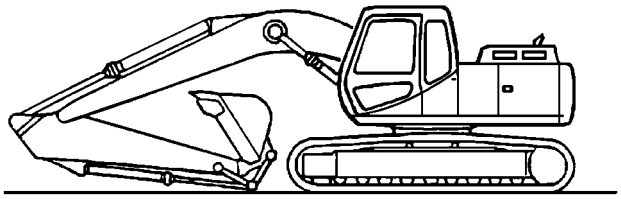

JS00163A1

Park the machine on hard, flat ground. Lower the attachment to the ground.

STEP 2

Release pressure in the hydraulic system and in the hydraulic sump tank (see Section 8000).

STEP 3

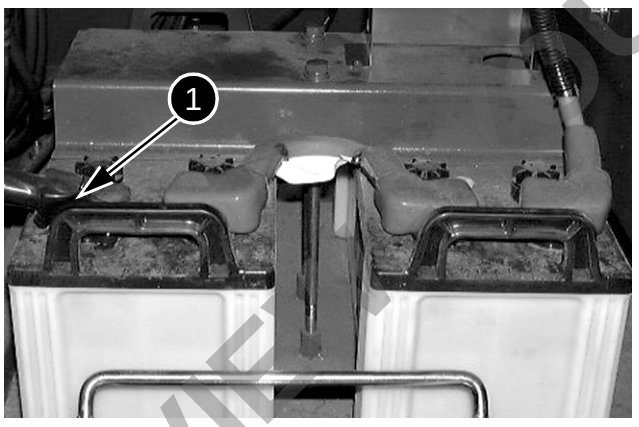

CD00F091

Disconnect the ground cable from the battery (1) (-).

STEP 4

Refer to Section 8003 and remove the hydraulic pump.

STEP 5

Refer to Section 2001 and remove the radiator and oil-cooler assembly.

STEP 6

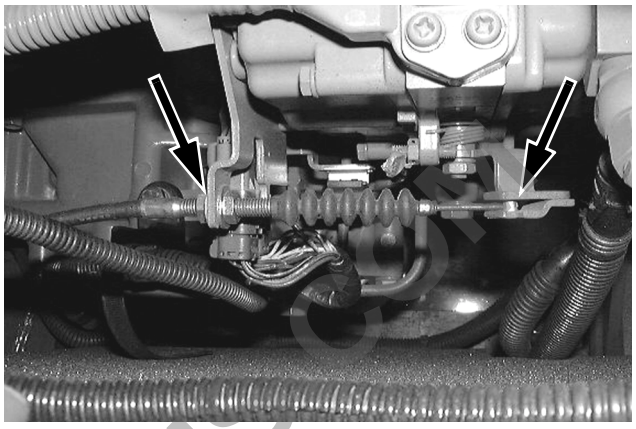

CD00J037

Remove the engine throttle control.

STEP 7

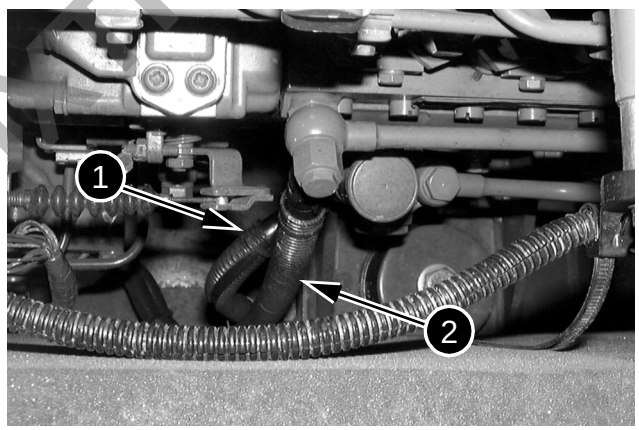

CD00J038

Disconnect the fuel supply pipe (1) and the fuel return pipe (2) and plug them.

STEP 8

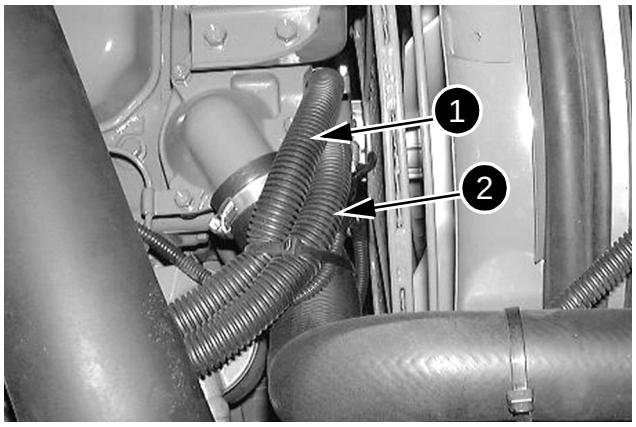

CD00J039

Remove the hoses (1) and (2) from the heater system and plug them.

PREVIEW OUFIT-HS.COM

TROUBLESHOOTING

Prior Inspections

Item	Value	Action
POINTS TO BE CHECKED WHEN STARTING		
Lubricants - Coolants		
1. Check the quantity of fuel	---	Add fuel
2. Check that fuel is not contaminated	---	Clean, drain
3. Check the quantity of hydraulic fluid	---	Fill with fluid
4. Inspect the hydraulic fluid filter	---	Drain, clean
5. Check the quantity of oil in each reduction gear	---	Fill with oil
6. Check the quantity of engine oil	---	Fill with oil
7. Check the quantity of coolant	---	Fill with water
8. Check the filter restriction indicator (dust)	---	Clean or change
Electrical equipment		
9. Check the battery terminals and wiring for tightness and corrosion	---	Tighten or change
10. Check the alternator terminals and wiring for tightness and corrosion	---	Tighten or change
11. Check the starter motor terminals and wiring for tightness and corrosion	---	Tighten or change
OTHER POINTS TO CHECK		
Hydraulic system - Mechanical equipment		
12. Abnormal noise or smell	---	Repair
13. Check for oil leaks	---	Repair
14. Air in the system	---	Bleed the air
Electrical system - Electrical equipment		
15. Check the battery voltage (with engine shut down)	23-26 V	Change
16. Check the quantity of fluid in the battery	---	Add or change
17. Make sure that the cables are not discolored, burnt or stripped	---	Change
18. Check for missing or loose cable retaining clips	---	Repair
19. Check for dampness on cables (especially on connectors and terminals)	---	Disconnect and dry if damp
20. Check fuses for condition and corrosion	---	Change
21. Check the alternator voltage (with engine speed above the throttle control mid-point) (when battery charge is insufficient, there can be 25 V only at start up)	27.5-29.5 V	Change
22. Noise from battery relay (with starter motor ON or OFF)	---	Change

PREVIEW - YOUFIXTHIS.COM

SPECIAL TORQUE SETTINGS

No.	Component	Screw (Ø)	Key (mm)	Torque setting (lb-ft)
1 *	Travel motor/reduction gear assembly	M16	24	197-230
2 *	Sprocket	M16	24	197-230

Blurred on purpose. The manual you buy has this page in full quality.

PREVIEW - YOUFIXTHIS.COM

Download full manual at youfixthis.com

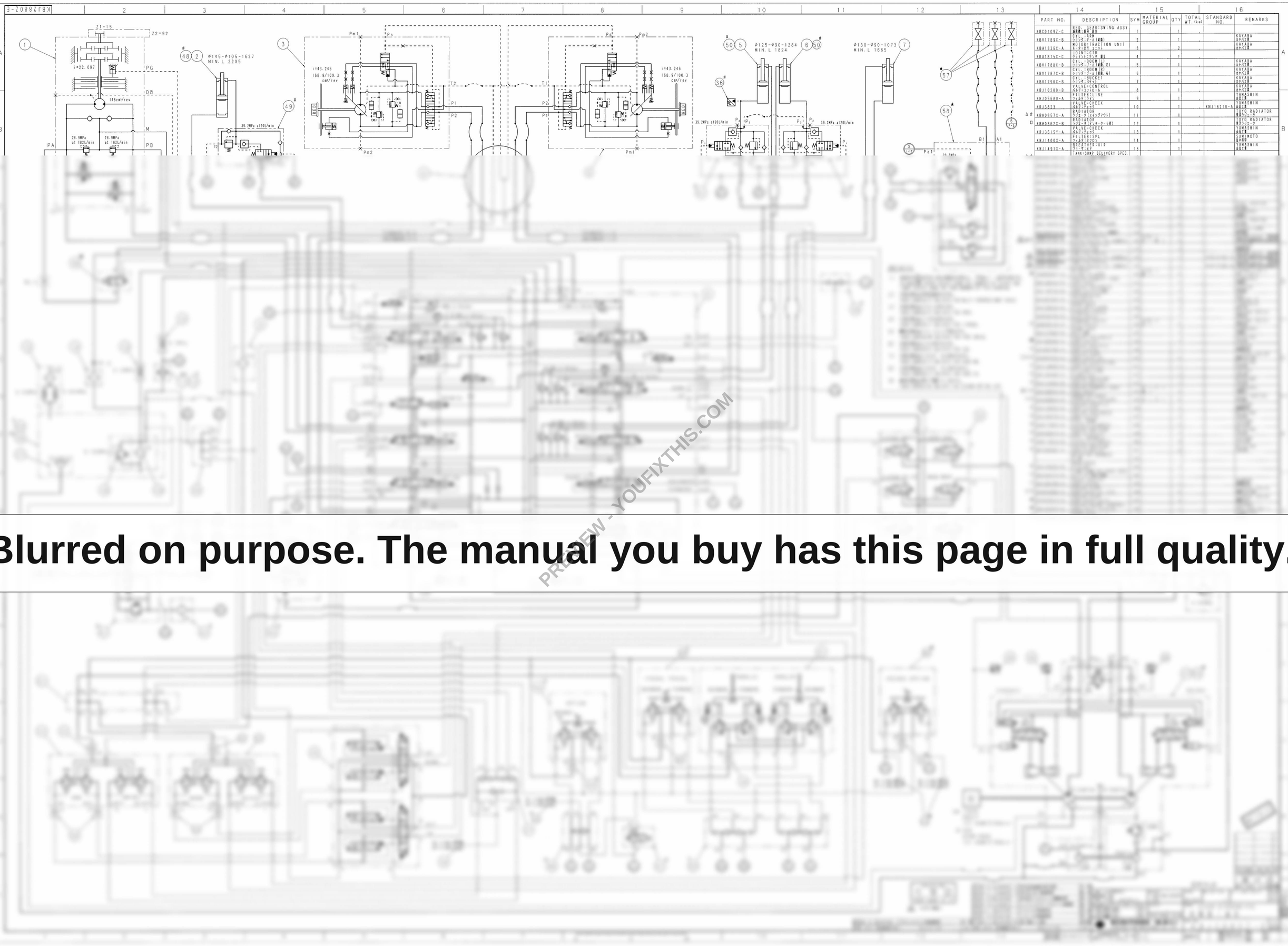

PREVIEW - YOUFIXTHIS.COM

Blurred on purpose. The manual you buy has this page in full quality.

Download full manual at youfixthis.com

KHR31637-E

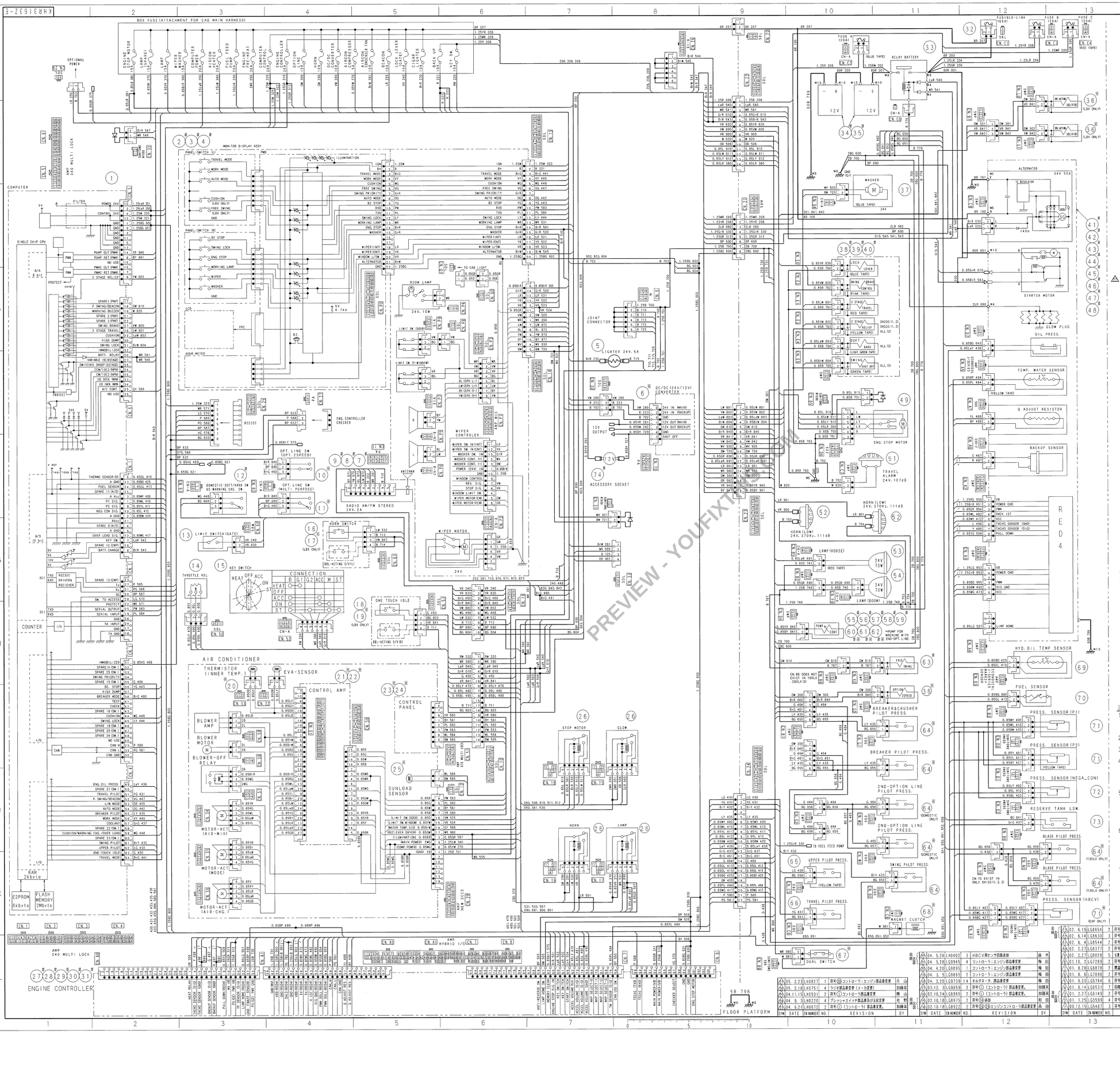

PART NO.	DESCRIPTION	SYM	MATERIAL GROUP	QTY	TOTAL WT.(kg)	STANDARD NO.	REMARKS
KHR26793Y-B	CONT:SPL コントロール(輸出)		1	1	-		NIPPON SEIKI 日精機
# KHR13825X-B	MONITOR モニタ ディスプレイ(国内) ASSY	2	(1)	1	-		NIPPON SEIKI 日精機
# KHR13826X-B	MONITOR モニタ ディスプレイ(EXP) ASSY	3	(2)	1	-		NIPPON SEIKI 日精機
# KHR13827X-B	MONITOR モニタ ディスプレイ(NA) ASSY	4	(3)	1	-		NIPPON SEIKI 日精機
KHR24888X-A	LIGHTER:CIGAR シガーライター			1	-		MITSUBO JIDOUSYA 自動車機器(三宝)
KHR24477Y-B	CONVERTER:DC-DC コンバータ DC-DC	6	OPT(1, 2, 3)	1	-		FUKU DENKI 福電機
KHR13824X-A	RADIO SET ラジオ(3) AM/FM ST (12/24V)	7	(1)	1	-		ESPERIA エスペリア
# KHR13771X-A	RADIO SET ラジオ(3) AM/FM ステレオ	8	LESS OPT(2) (3)	1	-		ESPERIA エスペリア
# KHR13945Y-A	RADIO SET ラジオ(3) AM/FM ステレオ(EXP)(12/24V)	9	(3)	1	-		YOSHIN ヨシン
KHR13129X-B	SWITCH:SPL スイッチ ロック(2段位)	10	OPT(1, 2, 3)	1	-		YOSHIN ヨシン
# KHR12948X-B	SWITCH:SPL スイッチ ロック(3段ライン)	11	OPT(1, 2, 3)	1	-		YOSHIN ヨシン
KHR13156	SWITCH:SPL スイッチ ロック(電磁弁)	12	(3)	1	-	KHR25195X-B	YOSHIN ヨシン
KHR18737X-A	SWITCH:LIMIT スイッチ リミット	13		1	-		NILES PARTS ナイルス部品
KHR27517X-B	SWITCH:SPL スイッチ ブロック(3)	14		1	-		TAKARA JUSHI 宝工業(株)(ジュシ事業所)
KHR13078	SWITCH:STARTER スイッチ:スタータ 8接	15	(3) (1, 2)	1	-	KHR13770X-B KHR13771X-B	MITSUBO JIDOUSYA 自動車機器(三宝)
KHJ11556X-B	KNOB ノブ(E)	16		1	-		NISHIYAWA ニシヤワ
KHJ1953	KNOB ノブ(E) スエイッチ	17	OPT(3)	1	-	KHJ1745X-B	NISHIYAWA ニシヤワ
KHJ11557X-B	KNOB ノブ(G)	18		1	-		NISHIYAWA ニシヤワ
KHJ11954X-B	KNOB ノブ(E) スエイッチ	19	OPT(3)	1	-		NISHIYAWA ニシヤワ
KHR2762	SENSOR:SPL センサ ON-OFF	20	OPT(1, 3) STD(1)	1	-	KHR2755X-A	SANDEN サンデン
KHR4135	UNIT ユニット エアコン	21	OPT(1, 3) STD(1)	1	-	KHR4132Y-A	SANDEN サンデン
KHR4136	UNIT ユニット ヒータ	22	OPT(2) STD(3)	1	-	KHR4133Y-A	SANDEN サンデン
KHR2758	PANEL:CONTROL パネルコントロール(A)	23	OPT(2, 3) STD(1)	1	-	KHR2755Y-A	SANDEN サンデン
KHR3132	PANEL:CONTROL パネルコントロール(B)	24	OPT(2) STD(3)	1	-	KHR3131Y-A	SANDEN サンデン
KHR2777	SENSOR:SPL センサ 8接	25	OPT(1) STD(1), OPT(3)	1	-	KHR3133Y-A KHR2786X-A	SANDEN サンデン
KHR12138E-B	RELAY:SPL リレー(ミニタイプ-6-)	26		4	-		MITSUBO JIDOUSYA 自動車機器(三宝)
KNH10010	CONT:SPL ENGINE コントロール エンジン	27	SH120(1, 2)	1	-	KNH0892X-C	ISUZU いすゞ(ベプセル)
KBH10560	CONT:SPL ENGINE コントロール エンジン	28	210LX(3) SH200(1, 2)	1	-	KRH1633X-C	ISUZU いすゞ(ベプセル)
KBH10030	CONT:SPL ENGINE コントロール エンジン	29	240LX(3) SH240(1, 2)	1	-	KBH0075X-C	ISUZU いすゞ(ベプセル)
KLH10010	CONT:SPL ENGINE コントロール エンジン	30	160LX(3)	1	-	KLH0238X-C	ISUZU いすゞ(ベプセル)
KRH10010	CONT:SPL ENGINE コントロール エンジン	31	280LX(3)	1	-	KRH1004X-C	ISUZU いすゞ(ベプセル)
KRH1592	FUSE ヒューズ (ヒューズボックス)	32			-	KRH1589C-A	MITSUBO JIDOUSYA 自動車機器(三宝)
KRH12141E-A	RELAY:BATTERY リレー(バッテリー)	33			-		FUJI DENKI 富士電機
# KRS1156Y-A	BATTERY バッテリ 端子無	34	130, 160LX(3) (1, 2)	2	-		UASA COMP. ユアサ コーポレーション
# KRH15330E-A	BATTERY バッテリ WITH 145FS1	35	210~280LX(3)	2	-		FURUKAWA DENCHI 古河電池
# KRJ3557U-A	VALVE:SOLENOID バルブ:ソレノイド	36	OPT(1, 2)	3	-		NISHINA 仁科工業
KHN16398-A	TANK:WASHER タンク:ウォッシャ	37		1	-		PRESS KOUGYOU プレス工業(P工)
# KRJ1781Y-B	VALVE:SOLENOID バルブ:ソレノイド (2段)	38	SH120(1, 2)	1	-		UCHIDA YUATSU 内田油圧
# KRJ1304X-B	VALVE:SOLENOID バルブ:ソレノイド (2段)	39	SH240(1, 2) SH200(1, 2)	1	-		UCHIDA YUATSU 内田油圧
# KHJ11972X-B	VALVE:SOLENOID バルブ:ソレノイド (2段)	40	(3)	1	-		UCHIDA YUATSU 内田油圧
# KNH0933	ENGINE:DIESEL エンジン:ディーゼル (3段)	41	SH120(1) SH200(1)	1	-	KNH0930X-C KNH0933X-C	ISUZU いすゞ
# KRH1639	ENGINE:DIESEL エンジン:ディーゼル (3段)	42	SH200(1) SH240(1)	1	-	KRH1633X-C	ISUZU いすゞ
# KBH11008	ENGINE:DIESEL エンジン:ディーゼル (3段)	43	SH240(1) SH200(1)	1	-	KBH1008X-C KBH1009X-C	ISUZU いすゞ
# KNH0934	ENGINE:DIESEL エンジン:ディーゼル (3段)	44	130LX(3)	1	-	KNH0931Y-C	ISUZU いすゞ
# KLH0241	ENGINE:DIESEL エンジン:ディーゼル (3段)	45	160LX(3)	1	-	KLH0240Y-C	ISUZU いすゞ
# KRH1640	ENGINE:DIESEL エンジン:ディーゼル (3段)	46	210LX(3)	1	-	KRH1635X-C	ISUZU いすゞ
# KBH11009	ENGINE:DIESEL エンジン:ディーゼル (3段)	47	240LX(3)	1	-	KRH1007X-C	ISUZU いすゞ
# KBH11010	ENGINE:DIESEL エンジン:ディーゼル (3段)	48	280LX(3)	1	-	KBH1004X-C	ISUZU いすゞ
KRH0676	MOTOR:STOP モータ(24V)	49		1	-	KRH1333X-C	ISUZU いすゞ
	MISSING NUMBER 欠番	50					
KHR38520-A	ALARM:SPL アラーム音	51		1	-		MITSUBO JIDOUSYA 自動車機器(三宝)
KHR24237X-B	HORN ホーン 警報 (LOW)	52		2	-		MITSUBO JIDOUSYA 自動車機器(三宝)
KHR24751X-B	LAMP:WORKING ライト:ワーキング 24V X 70W	53		1	-		SUZUKI YOUHIN 鈴鈴油
KHR09537E-A	LAMP:WORKING ライト:ワーキング	54		1	-		SPK スパーク(ライト-A)
# KNJ2900X-B	PUMP:HYD. ポンプ:油圧 フランジ# SH120-32RV	55	SH120(1, 2)	1	-		UCHIDA YUATSU 内田油圧
# KBJ6159X-B	PUMP:HYD. ポンプ:油圧	56	280LX(3)	1	-		KAWASAKI 川崎工
# KBJ2789Y-B	PUMP:HYD. ポンプ:油圧	57	SH220(1, 2)	1	-		KAWASAKI 川崎工
# KLJ0605Y-B	PUMP:HYD. ポンプ:油圧	58	160LX(3)	1	-		UCHIDA YUATSU 内田油圧
# KBJ2895X-B	PUMP:HYD. ポンプ:油圧	59	280LX(3)	1	-		KAWASAKI 川崎工
#※ KNJ2957X-B	PUMP:HYD. ポンプ:油圧 フランジ# 2段ポンプ用	60	SH120(1)	1	-		UCHIDA YUATSU 内田油圧
#※ KBJ6136X-B	PUMP:HYD. ポンプ:油圧	61	SH200(1)	1	-		KAWASAKI 川崎工
#※ KBJ2848X-B	PUMP:HYD. ポンプ:油圧	62	SH220(1)	1	-		KAWASAKI 川崎工
# KHJ0653U-A	VLV:SOLENOID バルブ:ソレノイド	63	(3)	1	-		NISHINA 仁科工業
※ KHR10700-B	SWITCH:PRESS スイッチ:プレッシャ (0.49MPa)	64	SEE NOTE 注記参照	4	-		NAGANO KEIKI 長野計器
KHR10800	SWITCH:PRESS スイッチ:プレッシャ (1.18MPa)	65			-	KHR10790-B	NAGANO KEIKI 長野計器
KHR10810	SWITCH:PRESS スイッチ:プレッシャ (1.96MPa)	66		1	-	KHR10790-B	NAGANO KEIKI 長野計器
※ KHR2594	RECIEVER:DRIER レシーバ:ドライア	67	OPT(2, 3) STD(1)	1	-	KHR30733-A KHR42543-A	SANDEN サンデン
※ KHR3157	COMPRESSOR コンプレッサ 12V	68	OPT(2, 3) STD(1)	1	-	KHR27845Y-A	SANDEN サンデン
KHR2433X-B	SENSOR:THERMO センサ:サーモ	69		1	-		ISUZU SIKOKU いすゞ自動車四国(ブンソー)
KHR14107Y-A	SENSOR:FUEL センサ:フューエル	70		1	-		KANSEI カンセイ
※ KHR29147-B	SENSOR:PRESS センサ:プレッシャ (50MPa)	71	OPT(2) STD(1, 3)	3 2	-		NAGANO KEIKI 長野計器
KHR29155-B	SENSOR:PRESS センサ:プレッシャ (5MPa)	72			-		NAGANO KEIKI 長野計器
KHR10221	SWITCH:LEVEL スイッチ:レベル	73		1	-	KHR0229Y-A	ISUZU SIKOKU いすゞ自動車四国(ブンソー)
# KHR25019Y-A	SOCKET ソケット アクセサリ(DC12V)	74	(3)	1	-		TOKAI RIKA 東海理化

注記/NOTES

1) 本回路図は、SH120-3、SH160-3(一般海外)、SH200-3、SH240-3(国内・一般輸出)SH290-3(一般海外)、及び130LX、160LX、210LX、240LX、280LX(LBX)に対応する。
THIS CIRCUIT IS FOR SH120-3, SH160-3(GENERAL EXPORT), SH200-3, SH220-3(DOMESTIC·GENERAL EXPORT) SH290-3(GENERAL EXPORT), AND 130LX, 160LX, 210LX, 240LX, 280LX(LBX).

2) ※は、オプション部品を示す
※ IS OPTIONAL PART.

3) #は、機種又は仕向地によって適用される部品を示す。
IS APPLICABLE PART ACCORDING TO MODEL OR TERRITORY.

4) 括弧内の数値は適用される仕向地を示す(下記参照)。
THE NUMBER IN () MEANS APPLICABLE TERRITORY(SEE FOLLOWS).
1:国内/DOMESTIC
2:一般輸出/GENERAL EXPORT
3:LBX

5) 符号 ※9 の使用量数は下記の通りである。
THE NUMBER OF USE OF MARK ※9 IS SHOWED AS FOLLOWS.
国内/DOMESTIC ·····STD:1, OPT:3
一般輸出/GENERAL EXPORT·····STD:1, OPT:1
130LX(LBX) ·····STD:1, OPT:3
160.210.240.280LX(LBX)···STD:1, OPT:1

6) 図中に於けるアース記号及び配線交差図は下記の通りである。
EARTH LINE SYMBOLS AND CROSS POINT OF LINES IN THIS DRAWING SHOWS THE FOLLOWING.

直接 DIRECT	点灯ハーネス BODY EARTH	アース兼用 EARTH WITH CABLE	点検窓用取付る CONNECTED EACH OTHER	点検窓用非接続 NOT CONNECTED EACH OTHER

7) 配線図上の記号は電線色を示し記号前に付記した数値は図面番号 及び電線の断面積を示す。図示以外は0.5sqである。
THE SYMBOL AT EACH LINE SHOWS COLOR OF CABLE AND THE FIGURE BEFORE THE SYMBOL SHOWS THE CIRCUIT No. AND THE AREA OF CABLE. THE AREA OF CABLE NOT INDICATED IS 0.5 mm².

例 EX. 断面積 AREA 60 色 COLOR B 回路番号 CIRCUIT NO. 001

8) コネクタ表示は下記の通りである。
THE SYMBOL OF CONNECTOR IN THIS DRAWING SHOWS THE FOLLOWING.
メス端子 FEMALE TERMINAL / オス端子 MALE TERMINAL
SWP CN
コネクタ名称 CONNECTER'S NAME / コネクタNo. CONNECTOR No

色記号表
TABLE OF COLOR SYMBOLS

記号 SYMBOL	色 COLOR	記号 SYMBOL	色 COLOR
B	黒 BLACK	R	赤 RED
W	白 WHITE	Y	黄 YELLOW
Br	茶 BROWN	Lg	若葉 LIGHT GREEN
P	桃 PINK	Sb	空色 SKY BLUE
V	紫 VIOLET	L	青 BLUE
G	緑 GREEN	Gr	灰 GRAY
O	橙 ORANGE		

あわせ 色 a の電線下地に 色 b のストライプを表す。
例 BR: 茶の下地に 赤のストライプ。
a) MEANS CABLE COLOR a STRIPED BY b.
EX) BR MEANS CABLE COLOR BLACK STRIPED BY RED.

REVISION 改訂
21 替
DATE 2005. 2. 23

△'05年3月組立~

記号	内容	日付	承認	作図
△ 02. 6.19	LG6454	2	符号Ⓓ(ECU)部品変更。	白 山
△ 02. 6.14	LG6453	3	符号Ⓓ(ECU)部品変更(走行ラーム共通化)。	加藤英
△ 02. 6. 4	LG6544	2	符号Ⓓ部品変更	吉 水
△ 02. 2.27	LG6377	2	符号Ⓒ(コントローラ)部品変更。	加藤英
△ 02. 2.27	LG6028	5	6速ウリバイパ、組ボルブ、オルタネータ電線径変更	阿 田
△ 01.10. 2	LG7269	2	符号Ⓒ(コントローラ)部品変更。	加藤英
△ 01. 8.20	LG6878	2	禁止ハーナ等化	吉 田
△ 01. 8. 6	LG7098	2	符号Ⓒ(コントローラ)部品変更。	加藤英
△ 01. 6.20	LG6784	6	符号Ⓓ⑥(走行ラーム)部品変更。	加藤英
△ 01. 6.14	LG6531	7	図面追加及び削除	児玉哲
△ 01. 2.27	LG6149	2	符号Ⓒ(コントローラ)部品変更。	加藤英
△ 01. 1.25	LG5599	4	符号Ⓒ⑥(モニター)部品変更。	加藤英
△ 00.12.15	LG5487	3	符号Ⓒ(コントローラ)部品変更。	加藤英

SYM	DATE	CN NUMBER	NO.	REVISION	BY
△	04. 5.26	LH0002	3	HBCV用センサ回路追加	金 木
△	04. 5.26	LG6945	4	コントローラ:エンジン部品変更	梅 田
△	04. 4.20	LG6935	3	コントローラ:エンジン部品変更	梅 田
△	04. 3. 5	LG6865	2	コントローラ:エンジン部品変更	梅 田
△	04. 2.20	LG7339	14	オルタネータ、部品変更	梅 田
△	03.12. 3	LG6659	2	符号Ⓒ(コントローラ)部品変更。	加藤英
△	02.10.24	LG6965	2	符号Ⓒ(コントローラ)部品変更。	加藤英
△	02.10.18	LG6975	2	符号Ⓓ部品変更	松 田
△	02.10.18	LG6922	2	符号Ⓓ⑥ エンジンコントローラ部品変更	吉 田

SYM	DATE	CN NUMBER	NO.	REVISION	BY
△	05. 2.23	LH0827	1	符号Ⓓコントローラ・エンジン部品変更	片 山
△	05. 2.18	LH0751	4	ラジオ部品変更(メーカ変更)	加藤英
△	04.11.15	LH0501	2	符号Ⓒコントローラ部品変更	南 山
△	04. 9. 3	LH0270	4	プレッシャスイッチ部品番号/引込変更	片 野
△	04. 6.21	LH0072	2	符号Ⓒ(コントローラ)部品変更。	加藤英

参考図番 関連図番	KHR2700Z-E	指定部品番号表示 (東カコ-1042より)	有 無	G-1 G-2	塗装区分	

CUSTOMER	MFG. NO.	QTY
PRODUCTION QTY 個 付 図		
DATE 2000. 9.19	初年度	

METRIC

CODE	WEIGHT(kg)	H.T. (SEE NOTE)	PAINT
DZ1701	-		NN

MODEL	GROUP	SCALE
SEE NOTE 注記参照	COMMON 共 通	-

DRAWN	CHK'D	INSP.	APPR.

DATE 2000. 9.19

NAME ELECTRIC CIRCUIT DRAWING
図面名 回路図・電気 (RV・一般輸出・LBX)

DWG. NO. KHR31637-E

SUMITOMO (S.H.I.) CONSTRUCTION MACHINERY CO.,LTD.

130LX, 160LX, 210LX, 240LX, 280LX, 210LX-LF, 240LX-LF

Download full manual at youfixthis.com

240LX Crawler Excavators
Table of Contents

DIVISION/SECTION		SECTION N°	REFERENCE N°
1	**GENERAL INFORMATION**		
	Safety, general information and standard torque data	1001	7-27690LX
	General specifications and special torque setting	1002	7-29360-24LX
2	**ENGINE**		
	Removal and installation of the engine	2000	7-28230LX
	Radiator and oil-cooler	2001	7-28050LX
3	**FUEL SYSTEM**		
	Removal and installation of the fuel tank	3001	7-27970LX
4	**ELECTRICAL SYSTEM**		
	Electrical system, electrical and electronic troubleshooting	4001	7-28250-24LX
	Inspection and maintenance of batteries and connecting a booster battery	4002	7-27921LX
	Main and engine electronic control boxes	4003	7-27931-24LX
5	**UNDERCARRIAGE**		
	Removal and installation of the tracks set	5001	7-27750LX
	Upper and lower rollers	5003	7-27770-24LX
	Sprocket	5004	7-27781LX
	Idler wheel and tension shock absorber	5005	7-27801-24LX
6	**DRIVE TRAIN**		
	Drive motor and final drive transmission removal and installation	6001	7-27841LX
	Drive motor and final drive transmission disassembly and assembly	6002	7-28090LX
	Swing reduction gear, removal and installation	6003	[redacted]
	Swing reduction gear, disassembly and assembly	6004	7-28390LX
7	**UNDERCARRIAGE HYDRAULICS**		
8	**UPPERSTRUCTURE HYDRAULICS**		
	Depressurising and decontaminating the hydraulic system, use of the vacuum pump and bleeding the components	8000	7-27951-24LX
	Specifications, troubleshooting, checks and hydraulic pressure settings	8001	7-28270-24LX
	Hydraulic sump tank removal and installation	8002	7-27990LX
	Main and pilot pumps, removal and installation	8003	7-27860LX
	Main hydraulic control valve, removal and installation	8004	7-27890LX
	Attachment cylinders, removal and installation	8005	7-27791LX
	Rotating joint, removal and installation	8006	7-27811LX
	Pilot blocs, removal and installation	8007	9-35590LX
	Swing motor, removal and installation	8008	[redacted]
	Free swing disassembly and assembly	8009	9-35530LX
	Main hydraulic pump, disassembly and assembly	8010	7-35490LX
	Main hydraulic control valve, disassembly and assembly	8011	9-36270LX
	Attachment cylinders, disassembly and assembly	8012	7-27900-24LX
	Hand joystick control, disassembly and assembly	8013	7-28110LX
	Foot joystick control, disassembly and assembly	8014	7-28210LX
	Six stack solenoid valve, disassembly and assembly	8015	7-27910LX
	Cushion control, disassembly and assembly	8016	7-27940LX
	Hose burst check valve	8017	7-29630-24LX
	Rotating joint, disassembly and assembly	8018	7-28080LX
	Swing motor, disassembly and assembly	8019	7-29760LX
	Hydraulic functions	8020	7-28420-24LX

PREVIEW - YOUFIXTHIS.COM

Copyright © 2001 Link-Belt
Printed in U.S.A.
November 2001

SAFETY

This symbol means ATTENTION! BECOME ALERT! YOUR SAFETY IS INVOLVED. The message that follows the symbol contains important information about safety. Carefully read the message. Make sure you fully understand the causes of possible injury or death.

To prevent injury always follow the Warning, Caution and Danger notes in this section and throughout the manual.

Place a “Do not operate“ tag on the starter switch key before carrying out any service or repair work on the machine.

.

WARNING: *Read the operator’s manual to familiarize yourself with the correct control functions.*

WARNING: *Operate the machine and equipment controls from the seat position only. Any other method could result in serious injury.*

WARNING: *This is a one man machine, no riders allowed.*

WARNING: *Before starting engine, study Operator’s Manual safety messages. Read all safety signs on machine. Clear the area of other persons. Learn and practice safe use of controls before operating.*
It is your responsibility to understand and follow manufacturers instructions on machine operation, service and to observe pertinent laws and regulations. Operator’s and Service Manuals may be obtained from your Link-Belt dealer.

WARNING: *If you wear clothing that is too loose or do not use the correct safety equipment for your job, you can be injured. Always wear clothing that will not catch on objects. Extra safety equipment that can be required includes hard hat, safety shoes, ear protection, eye or face protection, heavy gloves and reflector clothing.*

WARNING: *When working in the area of the fan belt with the engine running, avoid loose clothing if possible, and use extreme caution.*

WARNING: *When doing checks and tests on the equipment hydraulics, follow the procedures as they are written. DO NOT change the procedure.*

WARNING: *When putting the hydraulic cylinders on this machine through the necessary cycles to check operation or to remove air from a circuit, make sure all people are out of the way.*

PREVIEW - YOUFIXIT.COM

DIVISION/SECTION	SECTION N°	REFERENCE N°
9 UPPERSTRUCTURE		
Upperstructure, turntable and counterweight	9002	7-27981-24LX
Boom, dipper and bucket	9003	7-27961-24LX
Seat and safety belt	9004	7-28120LX
Cab and cab equipment	9005	7-28021-24LX
Air conditioning troubleshooting	9006	[redacted]
Air conditioning unit disassembly and assembly	9007	[redacted]
Air conditioning servicing	9008	[redacted]
Air conditioning components	9009	[redacted]
Large format hydraulic and electrical schematics	Pocket	7-28521

* *Consult the Engine Service Manual*

[redacted] *Sections to be distributed at a later date*

NOTE: Link-Belt Company reserves the right to make changes in the specification and design of the machine without prior notice and without incurring any obligation to modify units previously sold.

The description of the models shown in this manual has been made in accordance with the technical specifications known as of the date of design of this document.

PREVIEW - YOUFIXTHIS.COM

TABLE OF CONTENTS

SPECIFICATIONS 2

SPECIAL TORQUE SETTINGS 2

ENGINE 3
Removal and installation 3

SPECIFICATIONS

Weight of engine ..... See Section 1002

SPECIAL TORQUE SETTINGS

Engine retaining screws ..... See Section 1002

WARNING: *The components of the engine and the hydraulic pump reach high temperatures when the machine is operating. To avoid being burnt by hot metal or scalded by high temperature water or oil, allow the machine to cool down before starting any servicing operation.*

PREVIEW - YOUFIXTHIS.COM

H/S/L Mode Control

1) Circuit configuration

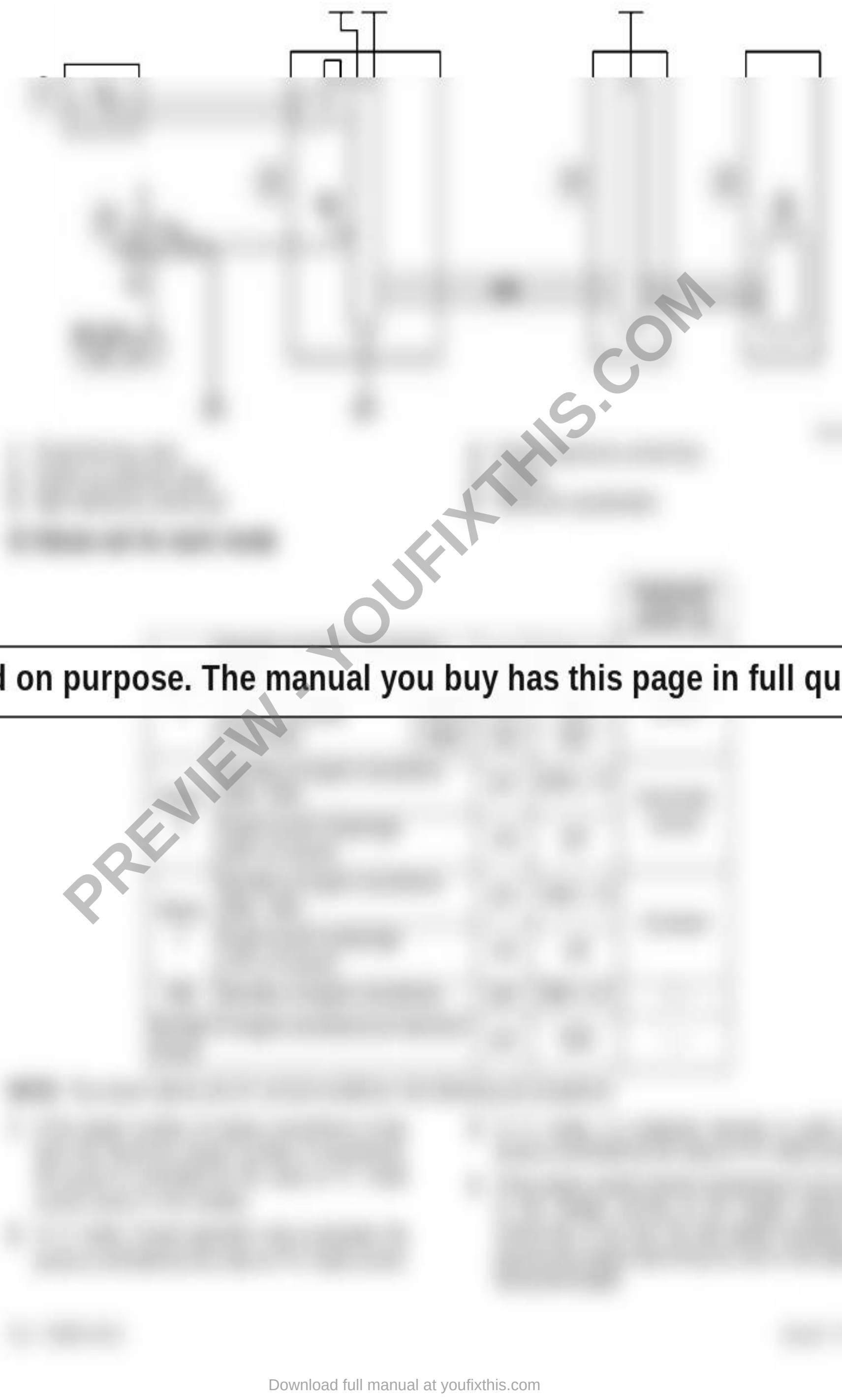

Blurred on purpose. The manual you buy has this page in full quality.

PREVIEW - YOUFIXTHIS.COM

Download full manual at youfixthis.com

3. Machine condition CHK3

CHK	MODE II H		
3			
SW1	0000	SW4	0000
SW2	0000	SW5	0000
SW3	0100	SW6	0000
		SW7	0000

SW1 to SW3 Electronic control box pressure switch inputs

SW4 to SW7 Electronic control box switch inputs

Pressure switch and electronic control box switch inputs: 0 = OFF, 1 = ON

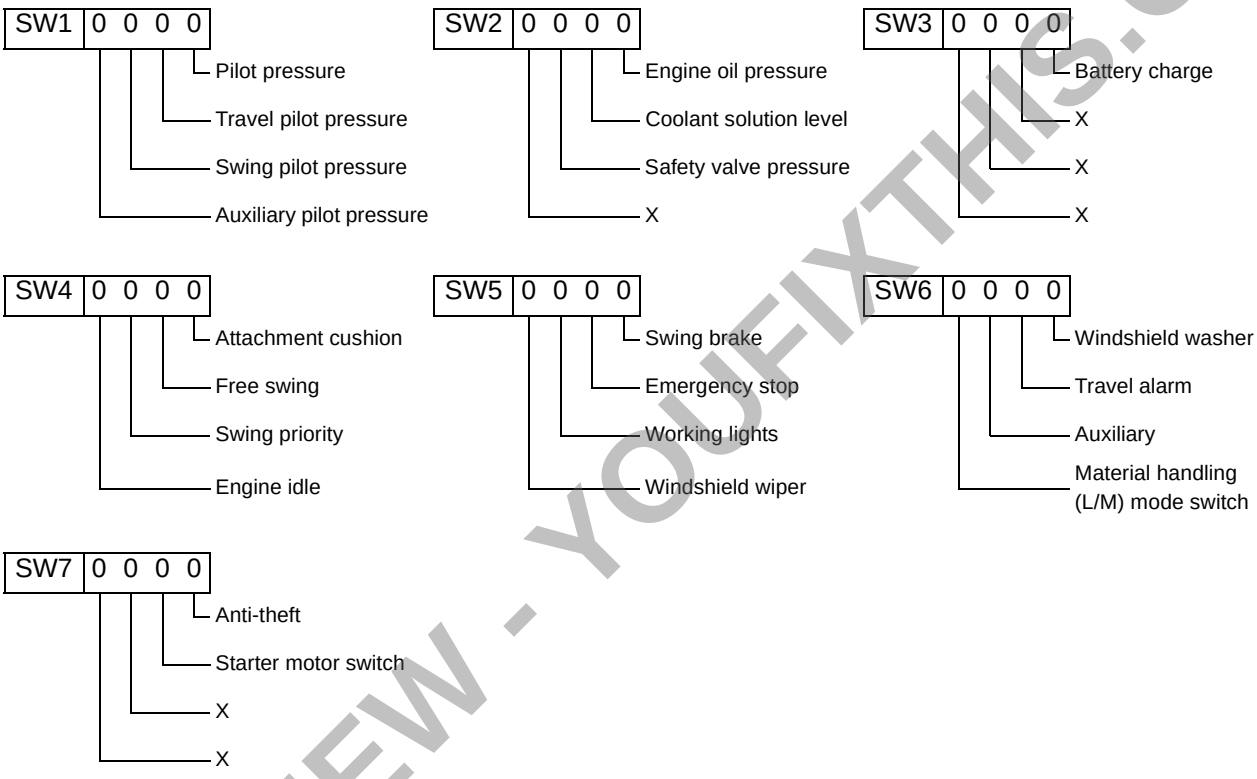

X = Not used

PREVIEW - YOUFIXTHIS.COM

3. Make sure that wire LR (blue/red) on the service connector is connected to wire LR on the main harness and install the meter.

NOTE: *The + terminal on the meter must be connected to wire LR (blue/red) on the service connector and the - terminal to the machine earth.*

4. Turn the starter switch key to "ON", the meter reading should be 24 V.

Block of 6 Solenoid Valves

1. Disconnect connector (A) from one of the solenoids on the 6 solenoid valve block (B)

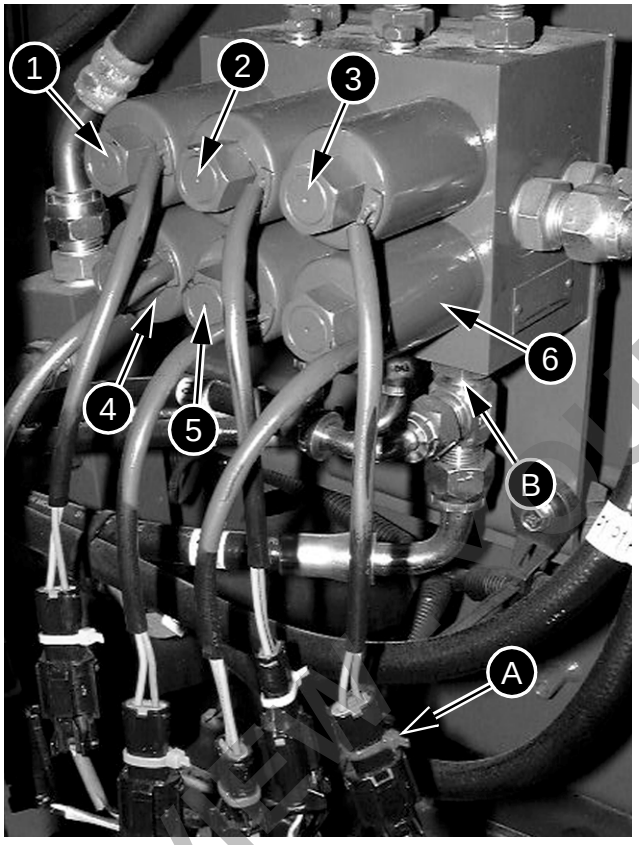

CD00F023

Marking	Function	Ring color
1	Swing pilot cancellation	Green
2	Power up	Yellow
3	2nd travel speed	Red
4	Attachment cushion	Light green
5	Swing brake	Pink
6	Pilot pressure	Blue

2. Connect the appropriate service connector (2P) to the connector on the disconnected solenoid only and install the meter.

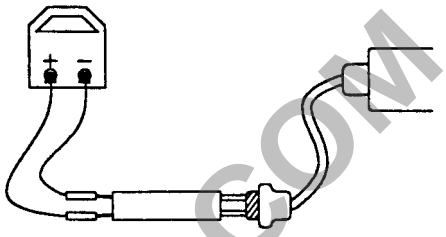

CS99A843

3. When the connection has been made, the solenoid resistance reading should be 45 Ω at 68°F.

NOTE: *The resistance value varies with temperature.*

PREVIEW ONLY FIXTHIS.COM

Reconditioning

When the roller is worn out or is leaking, it must be reconditioned or replaced by a new one. See Section 1002 for limits of wear.

Disassembly

STEP 1

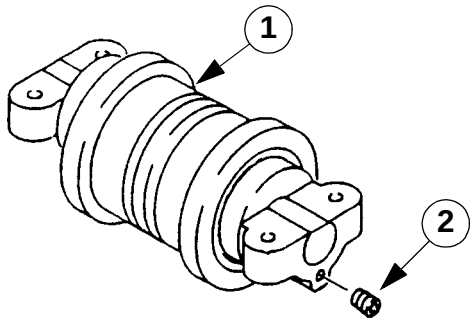

JS00301A

Clean the lower roller (1) using a suitable solvent. Remove the two drain plugs (2) and drain the oil.

STEP 2

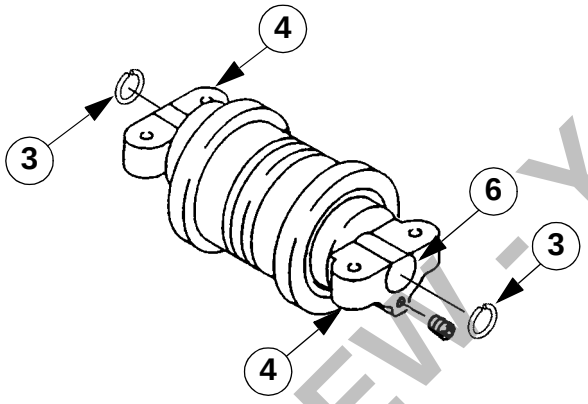

JS00302A

Remove the retainer rings (3) and the end caps (4) from the shaft (6). Discard the retainer rings.

STEP 3

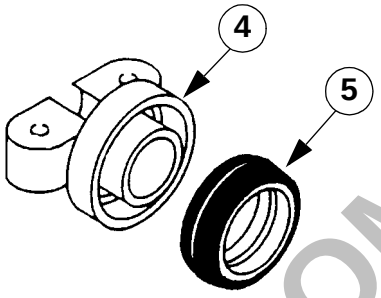

JS00303A

Remove the face seals (5) from the end caps (4) with a screwdriver or similar tool. Be careful not to damage the seal bore in the end cap. Discard the face seals.

STEP 4

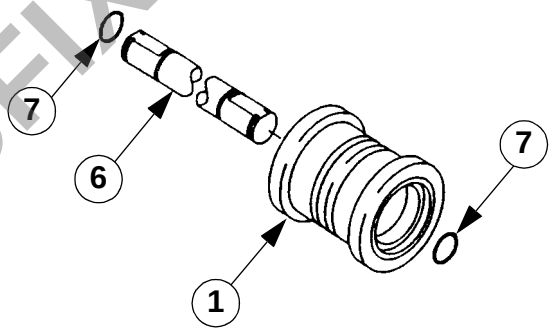

JS00304A

Remove and discard the O-rings (7) from the shaft (6). Take the shaft (6) out of the lower roller.

STEP 5

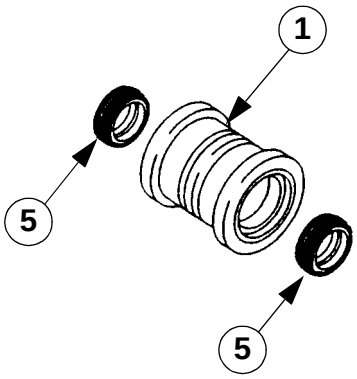

JS00305A

Remove and discard the face seals (5) from the lower roller (1) or the shaft (6).

PREVIEW - YOUFIXTHIS.COM

Installation

STEP 1

Check that the cylinder rod (11) is driven as far as possible into the cylinder barrel (15).

STEP 2



JD01082A

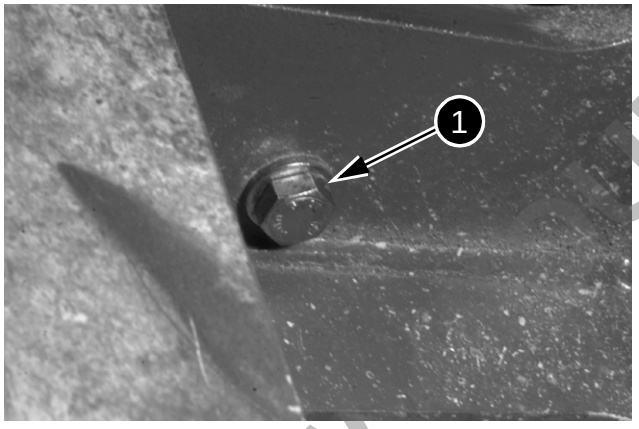

JD01081A

Move the tension cylinder into position. Apply Loctite 262 to the threads of the two screws (1). Support the tension cylinder while an assistant installs two flat washers (2) and screws (1) to fasten the tension cylinder. Tighten the screws to torque (see specifications).

STEP 3

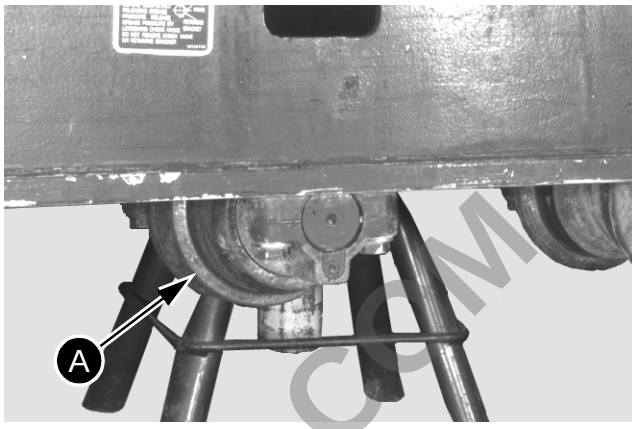

JD01080A

See "Installing the lower roller" for installing the roller (A) under the track tension cylinder.

PREVIEW OF FIXTHIS.COM

Inspection

STEP 1

Check for cracks, breakage and pitting on the planetary and sun gears, planetary carriers, hub, body, cylinder block, pistons and pads.

STEP 2

Check for heavy wear, cracks, pitting, deep scratches, rough areas on the distribution plate, piston face plate, thrust rings, pistons, piston housings in the cylinder block and control spools.

STEP 3

Turn the bearings, check that they do not have any hard spots or places where they are too loose. Check for flattened areas, corrosion, bursting, scaling or indented, grazed or corroded paths on the bearings and the inner and outer bushings.

STEP 4

If one of these conditions is present, change the component.

Assembly

STEP 1

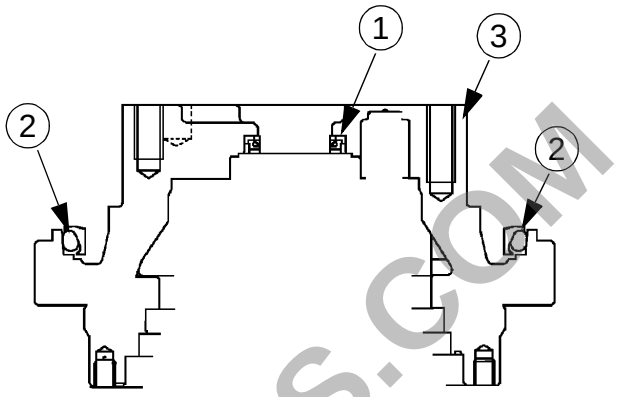

CI00G524

Assemble the lip seals (1). Position the half face seal (2) on the body (3).

STEP 2

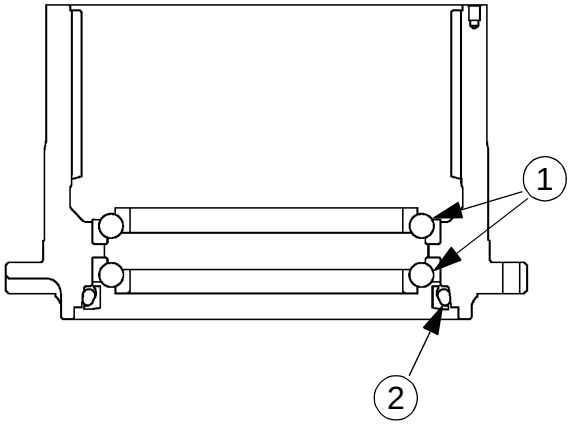

CI00G525

Assemble the bearings (1) hard up against the hub. Position the half face seal (2) on the hub. Coat the steel faces of the face seals with oil.

PREVIEW - YOUFIXTHIS.COM

6 Solenoid Valve Manifold

Port	Description
B	Supply to pilot manifold
T	Return to reservoir
C1	Select 2nd travel speed
C2	Swing brake control
C3	Higher pressure - 2-stage relief
C4	Cancel pilot system attachment cushion
C5	Cancel swing piloting
P	Pilot pressure cancellation control

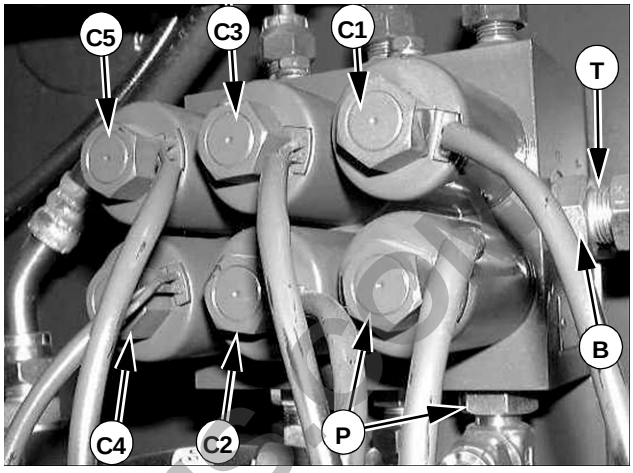

CD00E143

Control pattern modification

The modification consists of reversing the boom controls (raise/lower) on the right-hand control lever with the arm controls (extend/retract on the left-hand control arm).

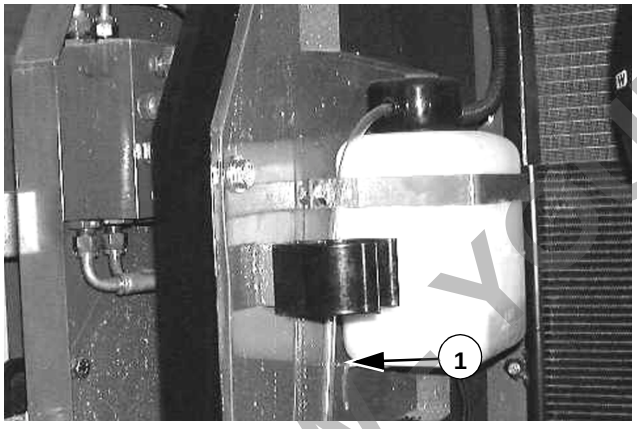

CD01A002

Remove the mounting screws (see arrows) and move the plate (1) to gain access to the hoses.

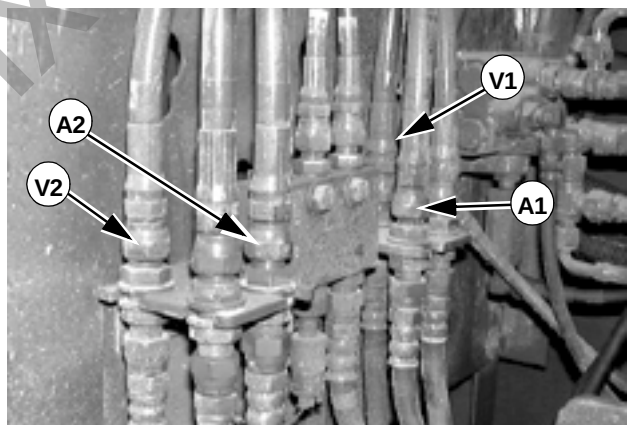

CD01A003

Invert the V2 hose with the A2 hose and the V1 hose with the A1 hose. Put the plate back in place and tighten the mounting screws.

PREVIEW - YOUFIXTHIS.COM

STEP 20

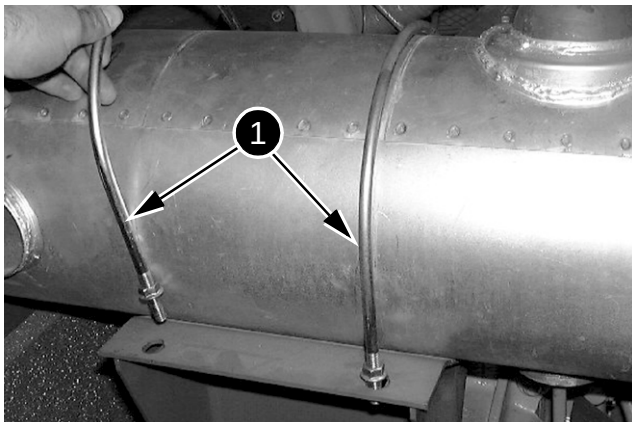

CD00F110

Remove the four retaining nuts from the silencer circlips, then remove the two circlips (1).

NOTE: *When installing, tighten the nuts to the torque specified on page 3.*

STEP 21

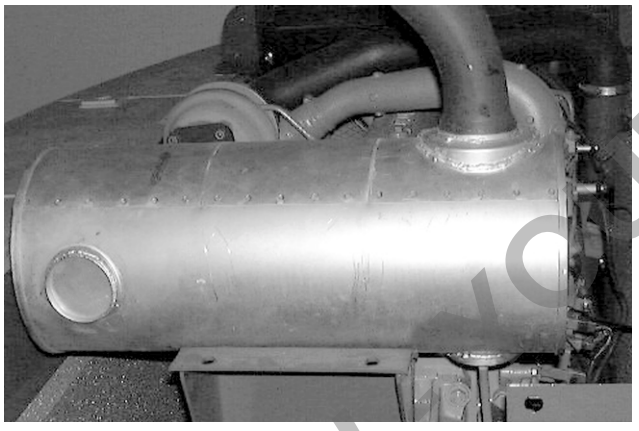

CD00F111

Remove the silencer assembly from the machine.

STEP 22

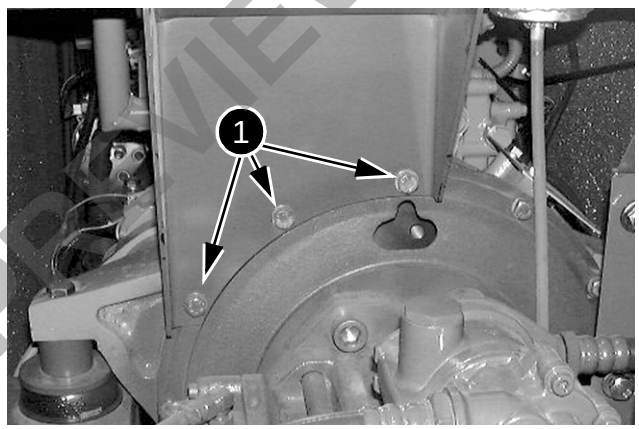

CD00F112

Remove the three screws (1) and the retaining washers from the silencer bracket, then remove the silencer bracket.

NOTE: *When installing, tighten the screws to the torque specified on page 3.*

STEP 23

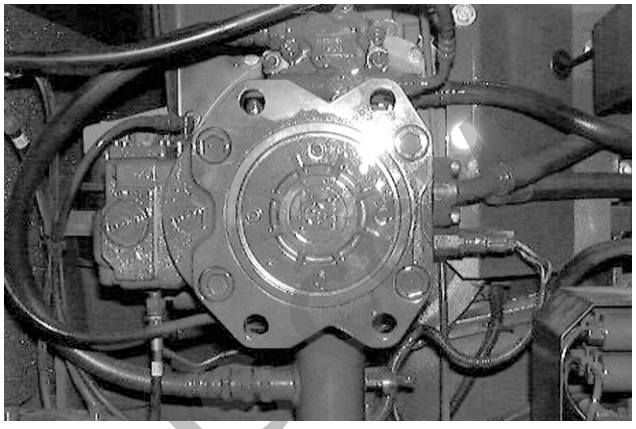

CD00F113

To aid proper installation, attach identification tags to all hoses and electrical connections of the main hydraulic pump and the pilot pump.

STEP 24

Remove the pipes, the hydraulic hoses and the electrical connections. Seal all hoses and union of the main pump as well as those of the pilot pump.

STEP 25

Install suitable lifting apparatus on the lifting eyes of the hydraulic pump. Do not leave any slack so that the pump can be supported when the coupling screws are removed.

STEP 26

Remove the screws that fasten the hydraulic pump flange to the engine hand-wheel housing.

NOTE: *When installing, tighten the screws to the torque specified in Section 1002.*

STEP 27

Remove the hydraulic pump from the motor and put it away from the machine. Place the hydraulic pump on a clean workbench using suitable brackets.

NOTE: *Carry out the following step only if a new hydraulic pump needs to be installed.*

PREVIEW YOUFIX.IT

STEP 6

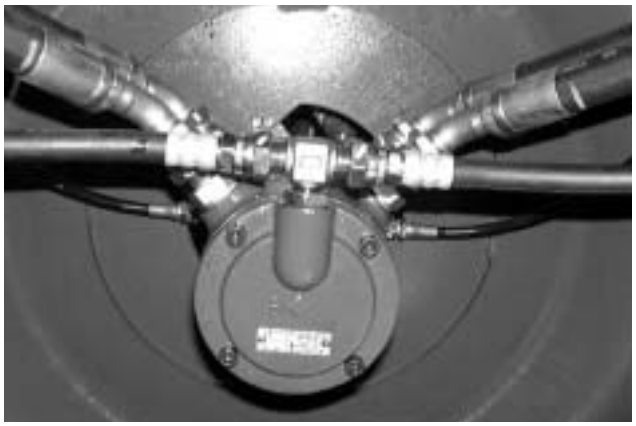

CD00F058



CD00F059

To facilitate installation, attach identification labels to all the rotating joint hoses (outer and inner).

STEP 7

Start the vacuum pump.

STEP 8

Disconnect the hoses from the rotating joint. Plug the rotating joint hoses and orifices.

STEP 9

Stop the vacuum pump.

STEP 10

Connect suitable lifting equipment to the rotating joint. Do not leave any slack since the rotating joint has to be supported once the retaining screws are removed.

STEP 11

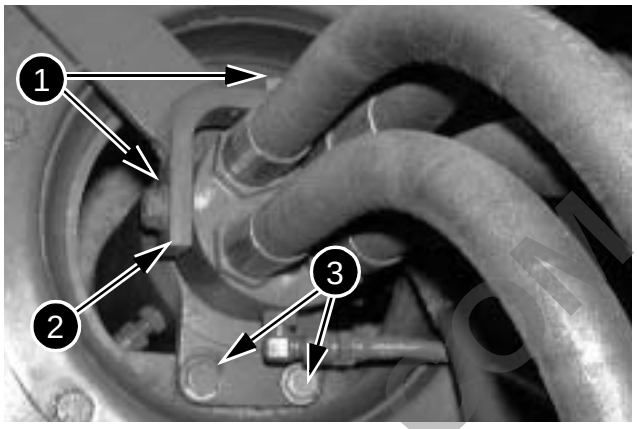

CD00F060

Remove the retaining hardware (1), the locking bar (2) and the retaining hardware (3) from the rotating joint outer component.

NOTE: *When installing, tighten to the torque specified in Section 1002.*

STEP 12

Raise the rotating joint sufficiently to free it from its bracket, so that it can be pivoted 90°. Place the rotating joint on the ground.

NOTE: *When installing, use the same procedure in the reverse order. Replace all O-rings with new O-rings. Before operating the machine, operate the travel, stop the engine and check that there are no leaks. If there is a leak, tighten the hose connections, check the level of hydraulic oil in the hydraulic sump tank and top up if necessary.*

PREVIEW - YOUFIXTHIS.COM

STEP 8

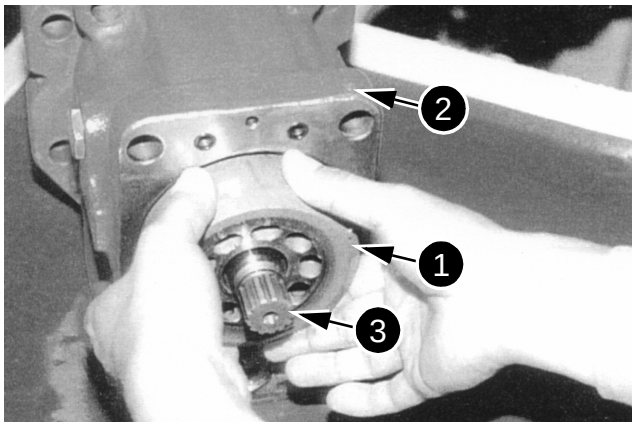

CD01G117

Install the springs, the spherical bushing, the pistons complete with the thrust ring on the cylinder block. Install the piston plate on the swash plate. Install the cylinder block assembly (1) in the housing (2) by engaging the splines of the spherical bushing and the cylinder block on the shaft (3).

STEP 9

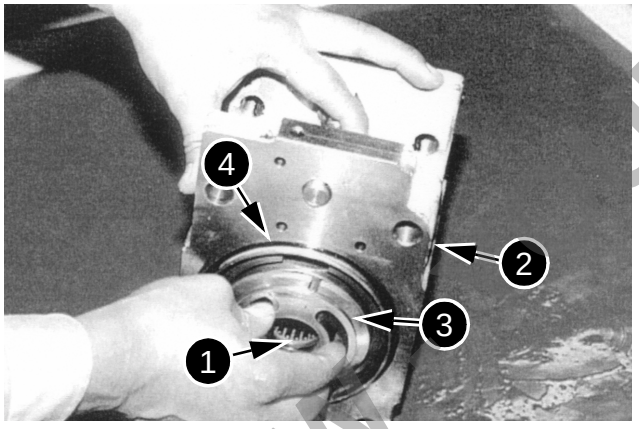

CD01G118

Install new needle bearings (1) in the intermediate housing (2). Use grease to stick the cylinder plate (3) on the intermediate housing (2) by adjusting it so that the retaining pin is engaged in the plate housing. Install a new seal (4). Position the intermediate housing on the pump body according to the reference marks made during disassembly.

STEP 10

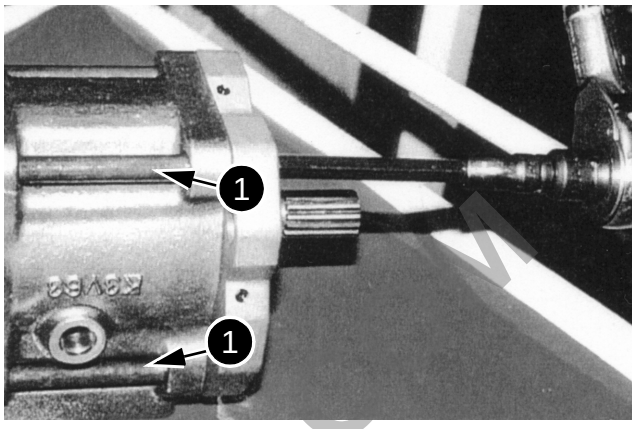

CD01G119

Install and tighten the screws (1) alternately to a torque of 318 lb-ft (431 Nm). Install the coupling pinion in the intermediate housing. Proceed in the same manner to install the second pump body.

STEP 11

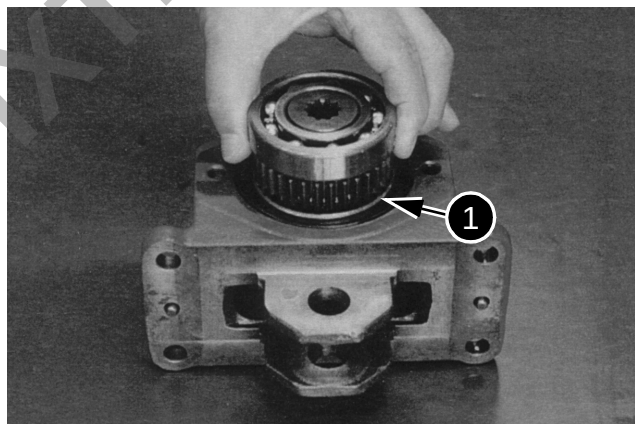

CD01G112

Position the pinion complete (1) with two bearings on the power take-off housing, install the assembly under a press and push in until stopped. Install the snap ring.

PREVIEW

STEP 30

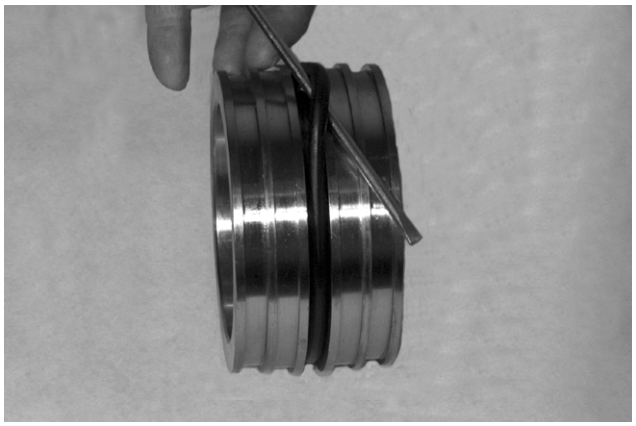

JD00646A

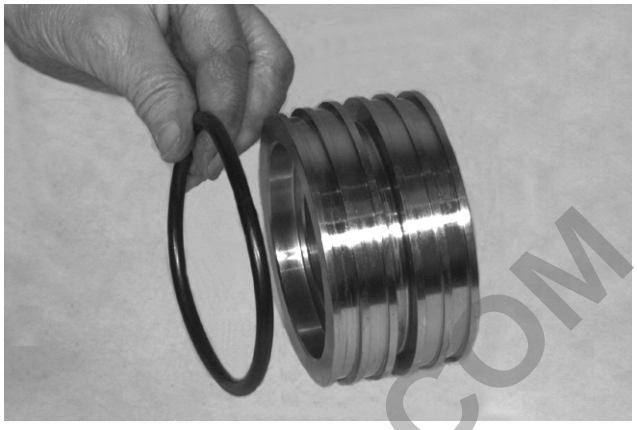

JD00647A

Use a suitable tool to remove the O-ring (45). Discard the O-ring.

NOTE: *Step 31 applies only to the arm cylinder.*

STEP 31

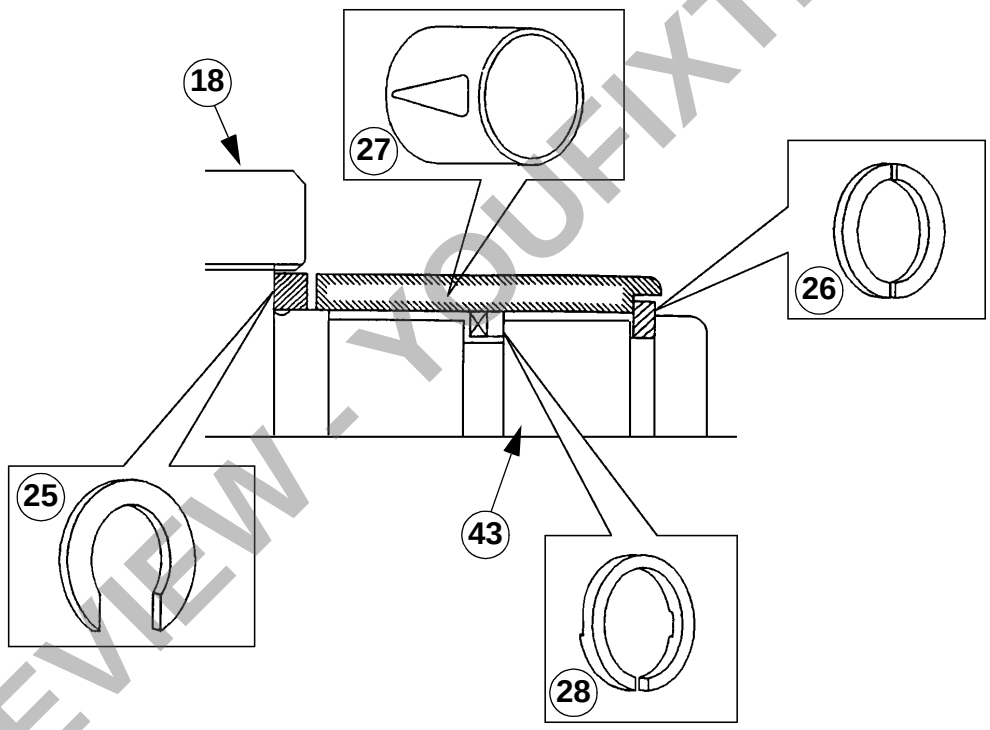

JS00648A

18 PISTON NUT
25 RING
26 STOPPER
27 CUSHION BUSHING
28 CUSHION RING
43 CYLINDER ROD

Remove the ring (25). Push the cushion bushing (27) away from the stopper (26). Remove the stopper (26). Remove the cushion bushing (27). Widen the slit of the cushion ring (28) then remove and discard the cushion ring (28).

PREVIEW - YOUFIXTHIS.COM

STEP 18

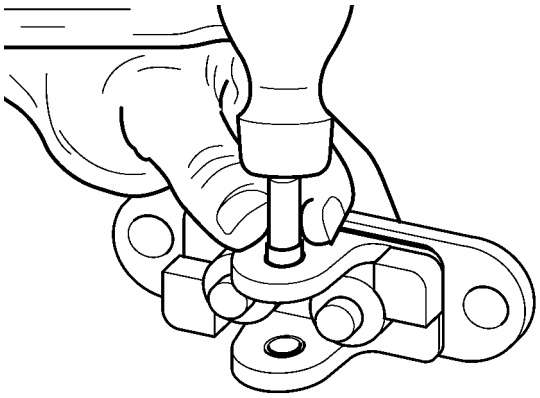

CI01B547

Place the cover on a flat surface and install the bushings using the special tool and a hammer.

STEP 19

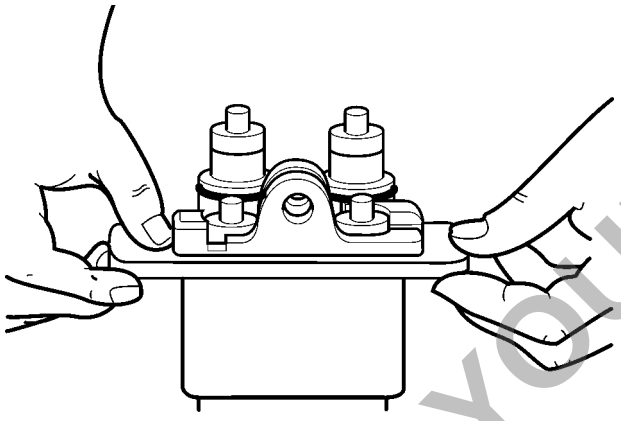

CI01B548

Assemble the cover on the travel pedal control body.

STEP 20

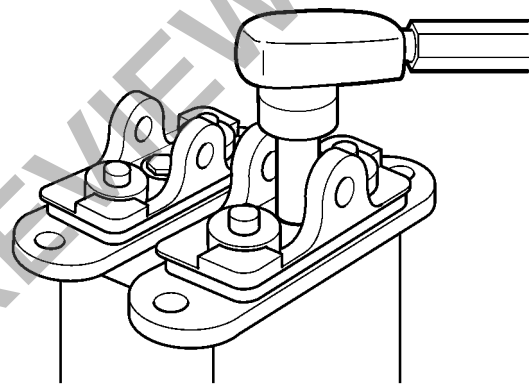

CI01B549

Tighten the cover retaining screw to the torque specified on page 3.

NOTE: *Check the proper positioning of the cover on the travel pedal control body.*

STEP 21

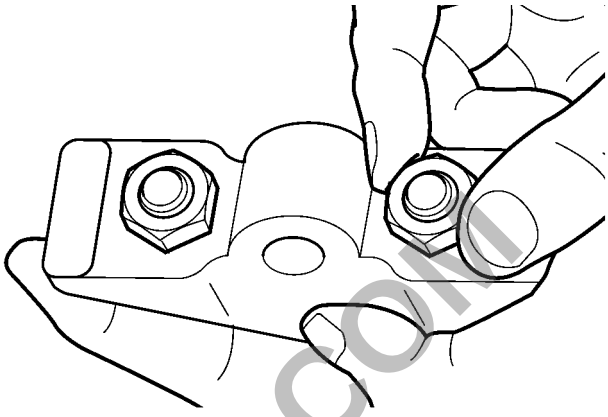

CI01B550

Assemble the nuts and the screws on the cam.

STEP 22

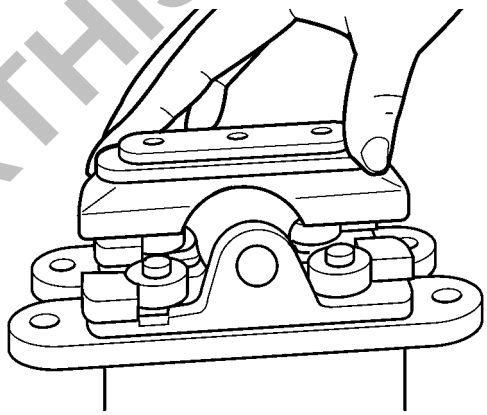

CI01B520

Position the cam on the cover; assemble the cam shaft while holding it.

NOTE: *Repeat the steps 18 to 22 for the other travel pedal control body.*

STEP 23

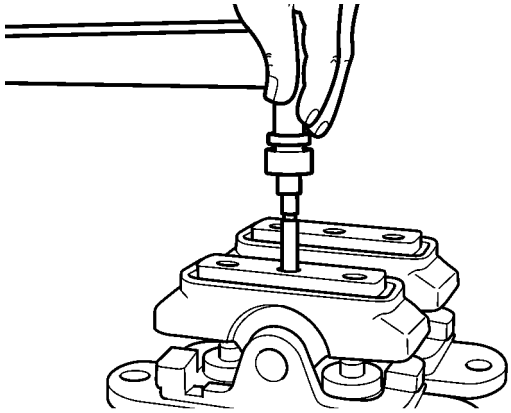

CI01B551

Apply Loctite 241 on the threads of the cam pin locking screw and tighten it to the torque specified on page 3.

PREVIEW - YOUFIXTHIS.COM

Download full manual at youfixthis.com

Assembly

Clean all the components. Use an oil stone to polish out scratches and rough areas. Use new seals, O-rings and sealing rings. Take the same precautions as during disassembly.

STEP 1

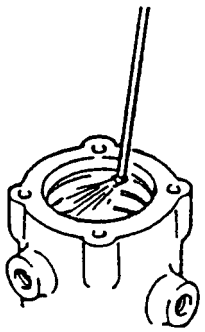

JS00032A

Clean the outer component in cleaning solvent or low pressure compressed air.

STEP 2

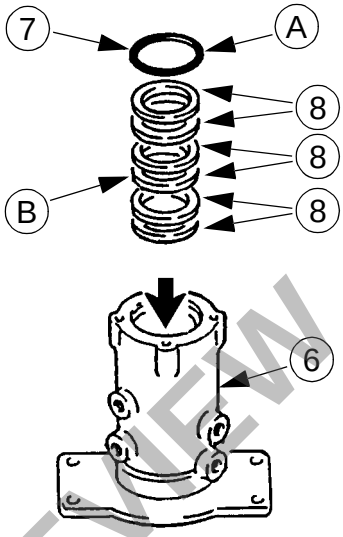

JS00033A

A: 1 O-ring
B: 6 sealing rings

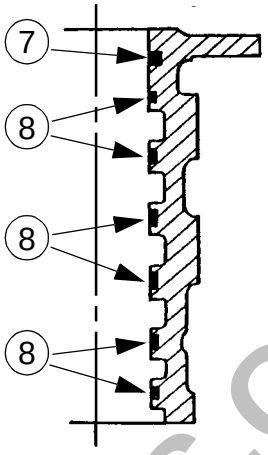

JS00034A

Coat the O-ring (7) with hydraulic fluid and insert it in the upper groove in the outer component. Coat the six sealing rings (8) with hydraulic fluid and insert them, starting from the second groove down from the top of the outer component.

STEP 3

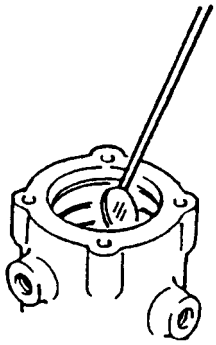

JS00035A

Use a mirror to check that the O-ring and sealing rings are correctly installed. Apply hydraulic fluid, make sure that the components are not protruding, twisted, etc.

PREVIEW - YOUFIXTHIS.COM

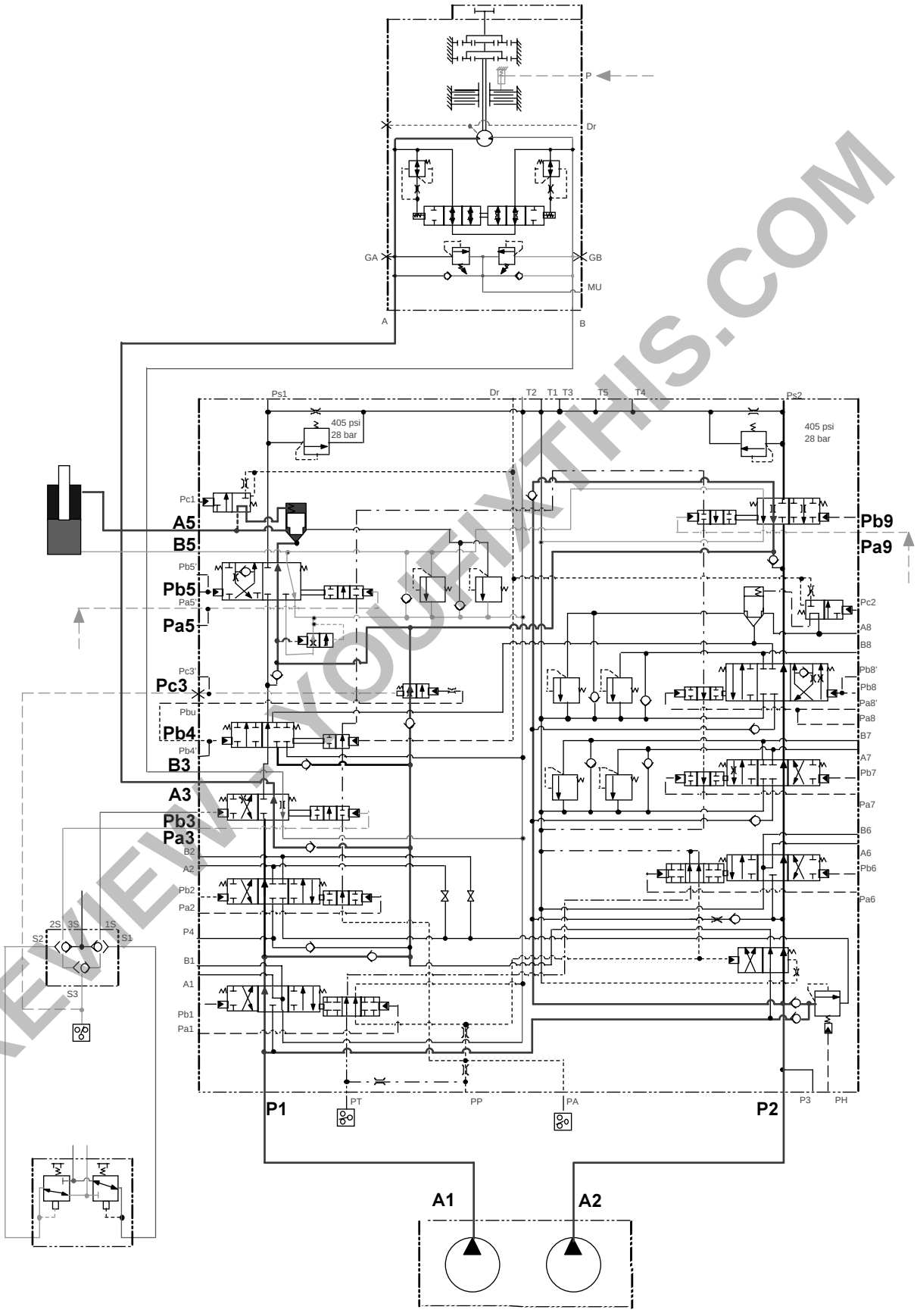

PREVIEW YOUFIXTHIS.COM

CM00K017

Removal

STEP 1

Place the bucket flat on flat, level ground. Operate the attachment controls so that the arm/bucket connecting pin is not under load from the weight of the arm. Shut down the engine.

NOTE: *The numbers in brackets in the following steps refer to the bucket drawing on page 3.*

STEP 2

Remove the locking pins (1) and (6).

STEP 3

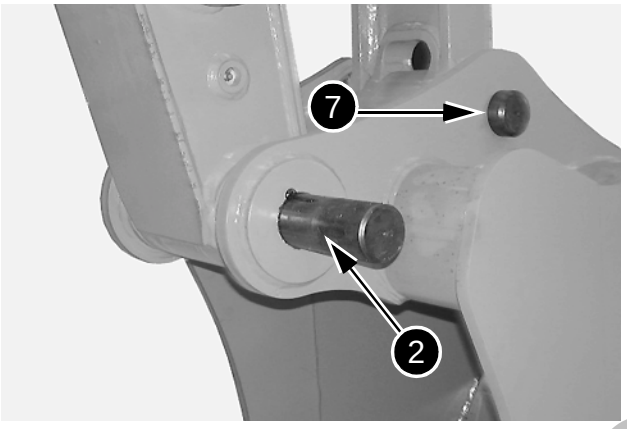

CD00E097

Remove the pins (2) and (7) and retain the shims (19).

STEP 4

Start the engine. Disengage the attachment from the bucket and retain the linkage seals (5) and (8).

STEP 5

Remove and discard the dust seals (9) and (20).

NOTE: *Perform steps 6 to 9 only if the bucket link (4) or the guide link (15) have to be changed.*

STEP 6

Attach a suitable lifting device to the bucket link (4). Disconnect the bucket cylinder rod from the bucket link (4) and from the guide link (15), see Section 8005. Remove the grease fittings (10) if necessary.

STEP 7

Remove the nuts (11) and the screw (12). Remove the pin (13) and the shims (14) from the arm.

STEP 8

Remove and discard the dust seals (21). Remove, if necessary, the grease fitting (16) from the pin (13).

NOTE: *Perform step 9 only if the bushings (17) and (18) have to be changed. See Specifications.*

STEP 9

Remove the bushings (17) and (18) from the bucket link (4) using a hammer and a suitable drift on the outer diameter of the bushing.

Installation

NOTE: *Perform step 1 only if the bushings (17) and (18) have been removed.*

STEP 1

Using a suitable sleeve, install the bushings (17) and (18) in the bucket link (4).

NOTE: *Perform steps 2 to 6 only if the bucket link (4) and the guide link (15) have been removed.*

STEP 2

Install new dust seals (21) on the arm. Install the pin (13) in a guide link (15) and install the pin on the arm. Install the second guide link (15) on the pin and install the screw (12).

STEP 3

Using a set of feeler gauges, check that the clearance between the arm and the guide link (15) is 0.039 to 0.059 inch (1 to 1.5 mm). If necessary remove the screw (12) and the pin (13) and add on or more shims as required to arrive at the correct clearance. Install the pin and the screw.

STEP 4

Install the first nut (11) on the screw and tighten until the nut touches the boss on the guide link. Loosen a quarter of a turn and use two wrenches to tighten the second nut on the first.

STEP 5

Install the grease fitting (16) on the pin (13).

PREVIEW - YOUFIXTHIS.COM

PREVIEW ONLY

You're viewing 25 of 600 pages

The full manual includes:

- All 600 pages, complete
- Searchable PDF (find any keyword)
- No watermarks
- Instant download
- Print-ready quality

GET FULL MANUAL NOW

Link-belt 240LX Service Manual

Scan or click anywhere
youfixthis.com

Click anywhere on this page to get the full manual