# 2 1, MAJOR EQUIPMENT SPECIFICATIONS

## 1) Lower Mechanism

PREVIEW - YOUFIXTHIS.COM

Blurred on purpose. The manual you buy has this page in full quality.

Download full manual at youfixthis.com

# 5 1, LOWER MECHANISM

**Purpose:** The installation and removal procedures for the lower mechanism are explained

**Caution:**

1) Before beginning work, wear protective gear and adhere to precautionary measures in order to safely conduct the work

2) Use proper tools for removing parets and also for correctly positioning them when reinstalling

3) Bleed pressure from the hydraulic circuit before beginning work
Refer to the page on bleeding hydraulic pressure procedures in the 05 Precautions section

4) When suspending a load
- The crane is to be operated by a licensed person
- Do not go underneath the suspended load

**Table of Contents:**

■ Key Plan ····· Page 2
■ Process Flow Diagram ····· Page 3
① Travel Equipment ····· Page 4
② Drive Sprocket ····· Page 6
③ Take-up Roller ····· Page 8
④ Upper Roller ····· Page 10
⑤ Lower Roller (Rubber Crawler Guide) ····· Page 12
⑥ Recoil Spring ····· Page 14
⑦ Grease Cylinder ····· Page 18
⑧ Track Shoe ····· Page 20
⑨ Rotating Joint ····· Page 24



PREVIEW - YOUFIXTHIS.COM

Download full manual at youfixthis.com

# 0 6, STANDARD TORQUE SPECIFICATIONS

1. Tightening of Bolts, Nuts



Blurred on purpose. The manual you buy has this page in full quality.

PREVIEW - YOUFIXTHIS.COM

Download full manual at youfixthis.com

# 7 4, CONTROL VALVE

## 4-2 Hydraulic Circuit Diagram

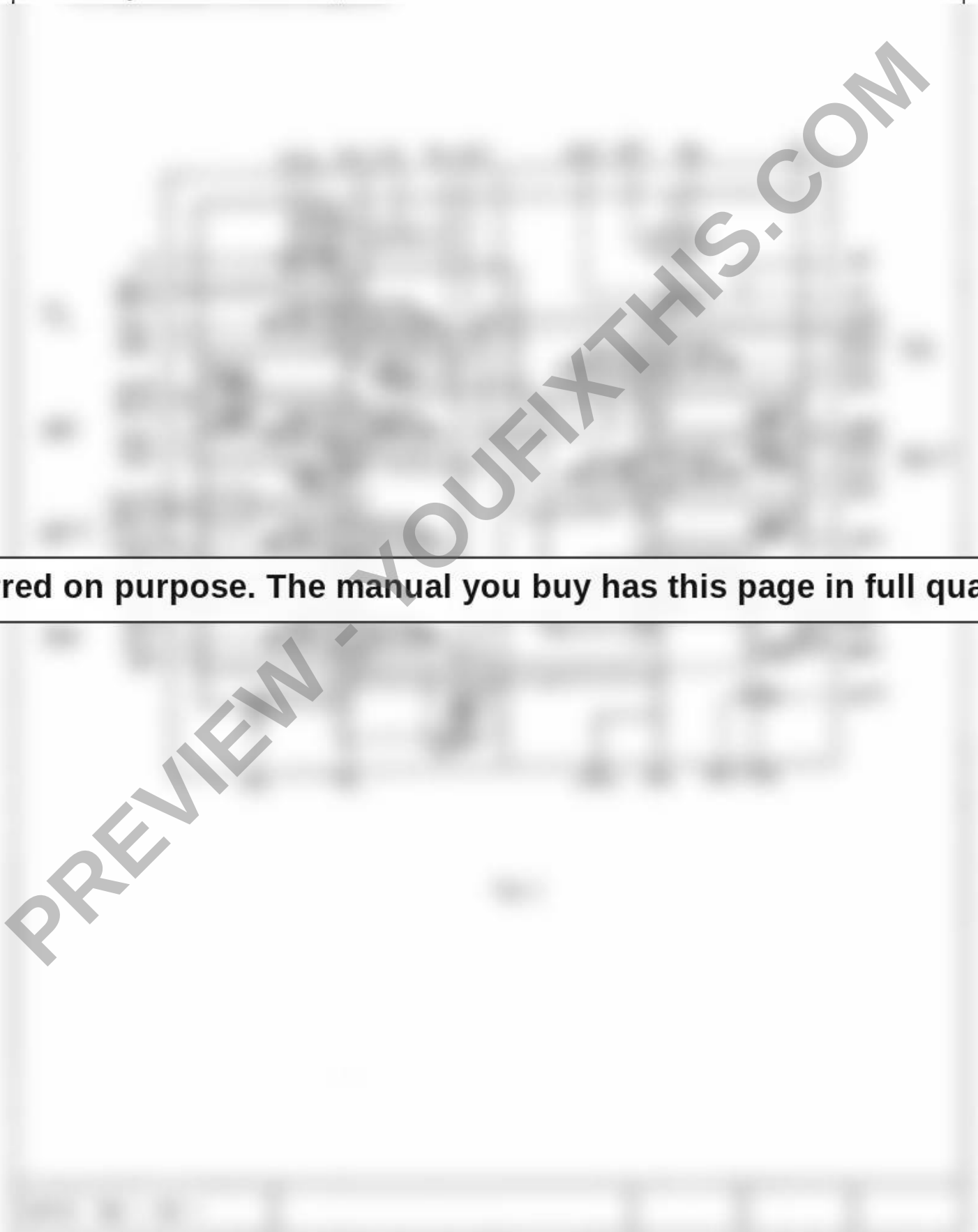

Blurred on purpose. The manual you buy has this page in full quality.

PREVIEW - YOUFIXTHIS.COM

Download full manual at youfixthis.com

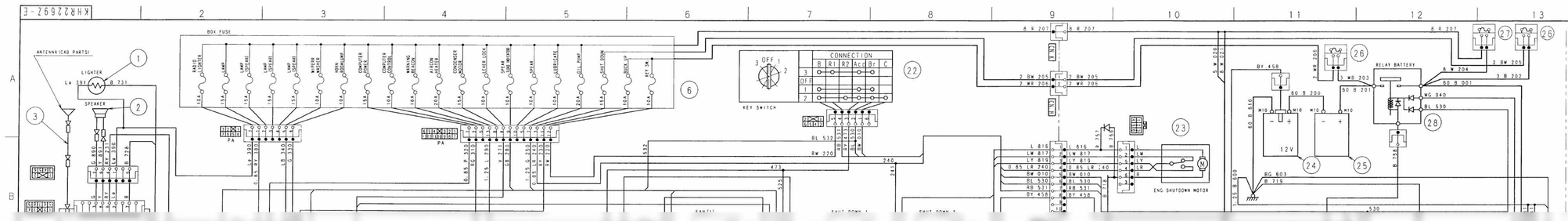


| PART NO. | DESCRIPTION | SYM | MATERIAL GROUP | QTY | TOTAL WT.(kg) | STANDARD NO. | REMARKS |
|---|---|---|---|---|---|---|---|
| KHR12402E-A | LIGHTER:CIGAR | 1 | | 1 | - | | SPIKE |
| KHR09611Y-A | SPEAKER | 2 | | 1 | - | | SANYO DENKI |
| KHR09008E-A | CORD:ANTENNA | 3 | | 1 | - | | HITACHI DENSO |
| KHR15271E-A | RADIO:SET | 4 | | 1 | - | | SANYO DENKI |
| KHR17911X-B | CONTROLLER | 5 | | 1 | - | | STANLEY |
| KHR15866E-B | BOX:FUSE | 6 | | 1 | - | | MIZUNO JIDOUSHA |
| KHR17263-B | PANEL:SWITCH(LH) | 7 | | 1 | - | | NIPPON SEIKI |
| KHR17271X-B | PANEL:SWITCH(RH) | 8 | | 1 | - | | NIPPON SEIKI |
| KHN14431Y-A | SWITCH:LIMIT | 9 | | 1 | - | | TAKARAJUSHI [EA07] |
| KHN14321Y-A | SWITCH:LIMIT | 10 | | 1 | - | | TAKARAJUSHI [EA07] |
| KHJ0740Y-B | KNOB(SWITCH) | 11 | | 1 | - | | NISHIYAMA |
| KHR17393-B | PANEL:SWITCH(RH) | 12 | | 1 | - | | NIPPON SEIKI |
| KHR16086E-A | SWITCH:SPL | 13 | | 1 | - | | TOKOE SHOUKAI [EC05] |
| | KNOB(SWITCH) | | | | | | NISHIYAMA |

Blurred on purpose. The manual you buy has this page in full quality.
PREVIEW - YOUFIXTHIS.COM
Download full manual at youfixthis.com

# 7 1, HYDRAULIC PUMP

## 7-7 Structural Diagram and Parts List

| No | Description | QTY | Remarks |
|---|---|---|---|
| 1 | Body | 1 | |
| 2 | Flange | 1 | |
| 3 | Rear cover | 1 | |
| 4 | Cylinder block ASSY | 2 | |
| 5 | Shaft | 1 | |
| 6 | Piston ASSY | 18 | |
| 7 | Swash plate (F) | 1 | |
| 8 | Swash plate (R) | 1 | |
| 9 | Valve plate (CW) | 1 | |
| 10 | Valve plate (CCW) | 1 | |
| 11 | Retainer plate | 2 | |
| 12 | Retainer holder | 2 | |
| 13 | Bearing | 2 | |
| 14 | Bearing | 4 | |
| 15 | Oil seal | 1 | |
| 16 | Oil seal case | 1 | |
| 17 | Shim | 1 | |
| 18 | Shim | 1 | |
| 19 | Conical spring ASSY | 2 | |
| 20 | Spring seat | 2 | |
| 21 | Guide ASSY | 4 | |
| 22 | Slide metal | 2 | |
| 23 | Regulator piston | 2 | |
| 24 | Stopper | 2 | |
| 25 | Stopper | 2 | |
| 26 | Set screw | 2 | |
| 27 | Set screw | 2 | |
| 28 | Nut | 4 | JIS B 1181 M16 |
| 29 | Stay | 2 | |
| 30 | Cover (R) | 2 | |
| 31 | Plug | 1 | |
| 32 | Piston | 1 | |
| 33 | Sleeve | 1 | |
| 34 | Spool | 1 | |
| 35 | Plug | 1 | |
| 36 | Spring | 1 | |
| 37 | Sleeve | 2 | |
| 38 | Piston | 6 | |
| 39 | Sleeve | 2 | |
| 40 | Spool | 2 | |
| 41 | Spring seat | 2 | |
| 42 | Spring seat | 2 | |
| 43 | Spring | 2 | |
| 44 | Spring | 2 | |
| 45 | Plug | 2 | |
| 46 | Spring seat | 2 | |
| 47 | Spring | 2 | |
| 48 | Nut | 2 | |
| 49 | Nut | 2 | JIS B 1181 M14 |
| 50 | Sub block | 1 | |
| 51 | Disk filter | 2 | |
| 52 | Cover (LF) | 1 | |
| 53 | Cover (LR) | 1 | |
| 54 | Piston | 2 | |
| 55 | Steel ball | 2 | |
| 56 | Relief valve ASSY | 1 | |
| 57 | Gear pump | 1 | |
| 58 | Solenoid | 1 | |
| 59 | Hose | 1 | |
| 60 | Adjustable elbow | 2 | |

| No | Description | QTY | Remarks |
|---|---|---|---|
| 61 | Mount flange | 1 | |
| 62 | Pin | 2 | |
| 63 | Pin | 2 | |
| 64 | Pin | 4 | |
| 65 | Plug | 1 | |
| 66 | Plug | 1 | |
| 67 | Plug | 2 | |
| 68 | Plug | 1 | |
| 69 | Plug | 2 | |
| 70 | Plug | 4 | |
| 71 | Socket head bolt | 4 | JIS B 1176. M16•35L |
| 72 | Socket head bolt | 6 | JIS B 1176 M12•50L |
| 73 | Socket head bolt | 18 | JIS B 1176 M12•30L |
| 74 | Socket head bolt | 4 | JIS B 1176. M3•45L |
| 75 | Socket head bolt | 4 | JIS B 1176. M3•22L |
| 76 | Plug | 8 | |
| 77 | Bolt | 2 | JIS B 1180 M10•25L |
| 78 | O-ring | 2 | JIS B 2401. 1A G145 |
| 79 | O-ring | 1 | JIS B 2401 1A. G70 |
| 80 | O-ring | 1 | JIS B 2401 1A. G55 |
| 81 | O-ring | 1 | AS568-213. 1B |
| 82 | O-ring | 2 | JIS B 2401 1B P29 |
| 83 | O-ring | 4 | JIS B 2401 1B P26 |
| 84 | O-ring | 1 | JIS B 2401 1B P24 |
| 85 | O-ring | 2 | JIS B 2401 1B. P21 |
| 86 | O-ring | 1 | JIS B 2401 1B. P20 |
| 87 | O-ring | 3 | JIS B 2401 1B P18 |
| 88 | O-ring | 3 | JIS B 2401 1B. P16 |
| 89 | O-ring | 1 | JIS B 2401 1B P12 |
| 90 | O-ring | 2 | JIS B 2401 1B P11 |
| 91 | O-ring | 1 | JIS B 2401 1B P9 |
| 92 | O-ring | 2 | JIS B 2401. 1B P8 |
| 93 | O-ring | 2 | JIS B 2401. 1B. P6 |
| 94 | Back-up ring | 2 | JIS B 2407 P29 T2 |
| 95 | Back-up ring | 2 | JIS B 2407 P21 T2 |
| 96 | Back-up ring | 2 | JIS B 2407 P20 T2 |
| 97 | Back-up ring | 2 | JIS B 2407. P16 T2 |
| 98 | Back-up ring | 3 | JIS B 2407 P16 T2 |
| 99 | Name plate | 1 | |
| 100 | Drive screw | 2 | |
| 101 | Eyebolt | 1 | |
| 102 | Sleeve | 1 | |
| 103 | Spool | 1 | |
| 104 | Spring | 1 | |
| 107 | Plug | 1 | |
| 108 | O-ring | 1 | JIS B 2401 1B P14 |
| 109 | Washer | 2 | JIS B 1256 10 |
| 110 | Orifice | 1 | |
| 111 | O-ring | 1 | JIS B 2407. 1B P7 |

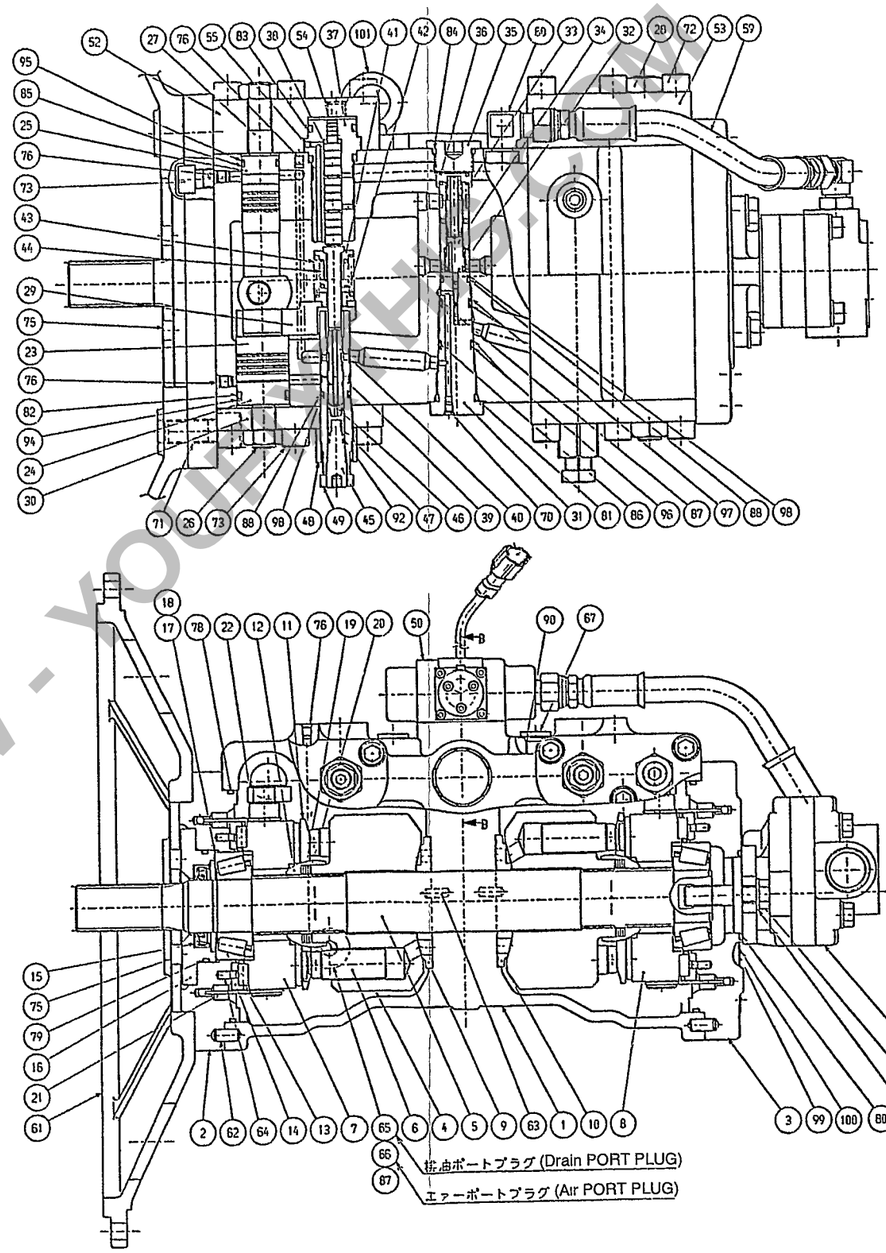




PREVIEW - YOUFIXTHIS.COM

Download full manual at youfixthis.com

# 01, SHOP MANUAL 2650/2700 CONTENTS

| 1st Edition December, 1994 | 1/7 |
|---|---|

Distribution Date


0, SHOP MANUAL EXPLANATION

| | | | |
|---|---|---|---|
| 0 1, | Contents | 94 | 8 |
| 0 2, | Safety | 94 | 8 |
| 0 3, | Introduction | 94 | 8 |
| 0 4, | Symbols Used | 94 | 8 |
| 0 5, | Precautions | 94 | 8 |
| 0 6, | Standard Torque Specifications | 94 | 8 |
| 0 7, | Numerical Value Conversion Table | 94 | 8 |

1, GENERAL
(Material for special course)

(Refer to Service Text)

2, SPECIFICATIONS

| | | | |
|---|---|---|---|
| 2 1, | Major Equipments Specifications | 94 | 12 |
| 2 2, | Main Body, Oils Grease | 94 | 12 |

3, PERFORMANCE

| | | | |
|---|---|---|---|
| 3 1, | Main Body Weight | 94 | 12 |

4, MISSING NUMBER

5, MAIN BODY DISASSEMBLY AND SERVICING PROCEDURES

| | | | |
|---|---|---|---|
| 5 1, | Lower Mechanism | 94 | 12 |
| 5 2, | Upper Mechanism | 94 | 12 |
| 5 3, | Attachment | 94 | 12 |
| 5 4, | Maintenance Standards | 94 | 12 |

6, MAJOR COMPONENTS DISASSEMBLY AND SERVICING PROCEDURES

| | | | |
|---|---|---|---|
| 6 1, | Tightening Torque for Major Parts | 94 | 8 |
| 6 2, | Take-Up Roller | 94 | 8 |
| 6 3, | Upper Roller | 94 | 8 |
| 6 4, | Lower Roller | 94 | 8 |
| 6 5, | Recoil Spring (2650) | 94 | 12 |
| | Recoil Spring (2700) | 94 | 8 |
| 6 6, | Rotating Joint | 94 | 8 |

7, MAJOR HYDRAURIC COMPONENT DISASSEMBLY AND SERVICING PROCEDURES

| | | | |
|---|---|---|---|
| 7 1, | Hydraulic Pump | 94. | 12 |
| 7 2, | Travel Equipment | 94 | 12 |
| 7 3, | Swing Equipment | 94 | 12 |
| 7 4, | Control Valve | 94 | 12 |
| 7 5, | Hydraulic Cylinder | 94 | 12 |
| 7 6, | Remote Control Valve | 94 | 12 |
| 7 7, | Valve | 94 | 12 |


PREVIEW - YOUFIXTHIS.COM

Download full manual at youfixthis.com

# 0 2, SAFETY



**Areas marked with ⚠ are especially important regarding safety. Read and understand well before beginning work.**

1 When doing servicing work, first read the data (Operator's Manual, Service Text) and understand the contents well before beginning work

2 When assembling or disassembling, take sufficient safety measures to prevent accidents such as falling loads, becoming pinned, fire, etc (When doing servicing underneath the machine, block the machine with blocking, etc to prevent getting pinned by the machine

3 When suspending loads with a crane, a licensed operator should do the work.
① The crane operator and workman who does the rigging should be licensed to do so
② Rigging must be inspected

4 When conducting inspection or servicing, wear clothing suitable for the job and also wear protective gear according to the nature of the work
(Safety shoes, helmet, safety glasses, gloves, ear plugs, dust mask, etc )

5 Pay attention Keep a clean, orderly work area to prevent slips or falls

6 When conducting inspection or servicing inside, provide proper ventilation

7 Be prepared for any emergencies and take adequate fire-preventative measures

PREVIEW - YOUFIXTHIS.COM



Download full manual at youfixthis.com

PREVIEW - YOUFIXTHIS.COM

Download full manual at youfixthis.com

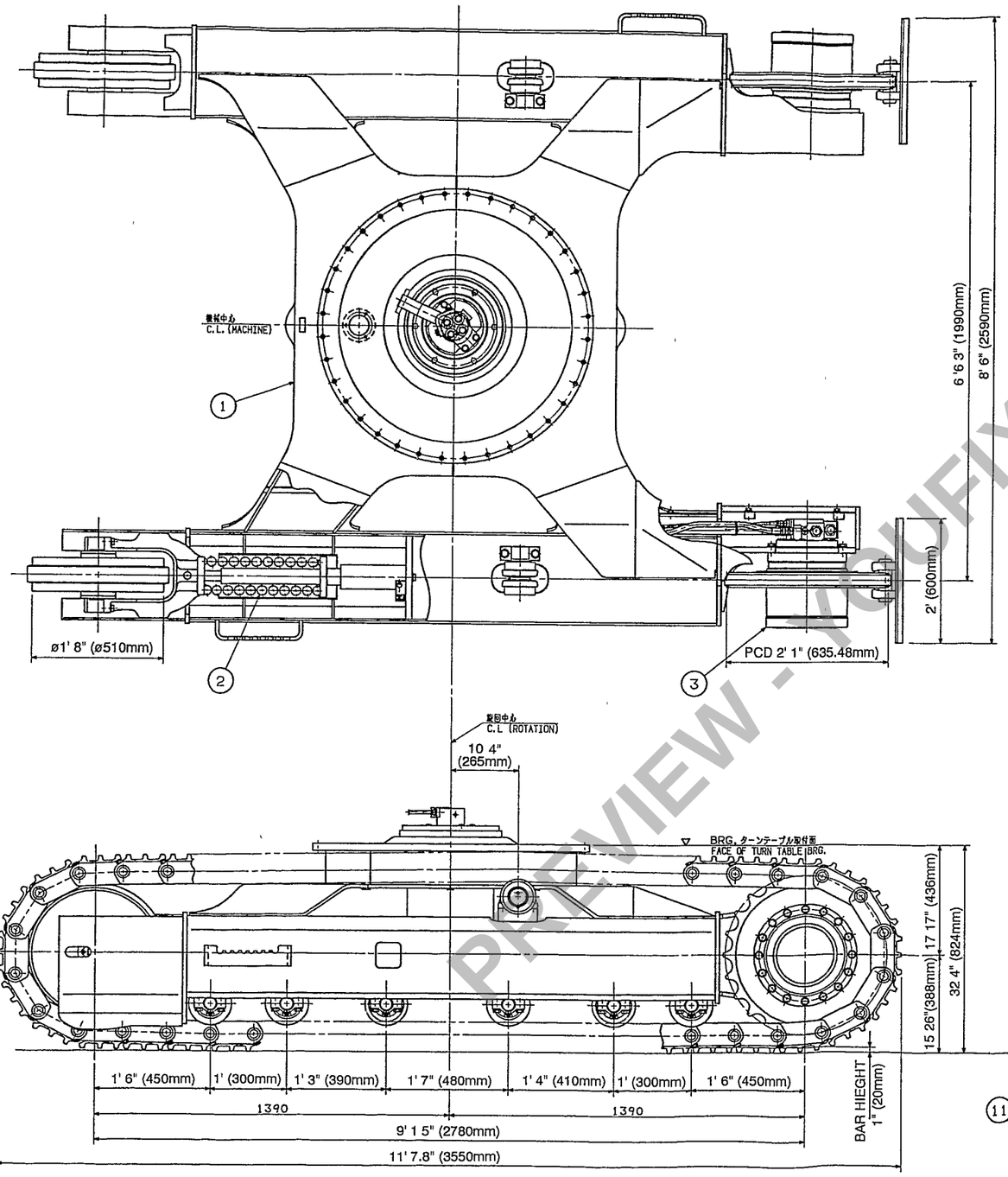


## ① General View; Lower 2650

| | DESCRIPTION | SYM | QTY | TOTAL WT (kg) | TOTAL WT (lbs) |
|---|---|---|---|---|---|
| | ASSEM, LOWER FRAME | 1 | 1 | 1449 | 3195 |
| | ASSEM, RICOIL SPRING & ROLLER | 2 | 2 | 630 | 1389 |
| | ASSEM, TRACTION EQUIPMENT | 3 | 2 | 452 | 997 |
| | ASSEM, TRACTION MOTOR LINE | 4 | 1 | 16 | 35 |
| | ASSEM, CTR JOINT | 5 | 1 | 27 | 59 |
| ※ | ASSEM, UNDER COVER | 6 | 1 | 26 | 57 |
| | SHOE, GROUSER 600 | 7 | 2 | 1681 | 3707 |
| ※ | SHOE, GROUSER 700 | 8 | 2 | 1989 | 4386 |

NOTES
AMOUNT OF WEIGHT DON'T CONTAIN OPTION PARTS

PREVIEW - YOUFIXTHIS.COM



Download full manual at youfixthis.com

# 5 1, LOWER MECHANISM

## Removal and Installation

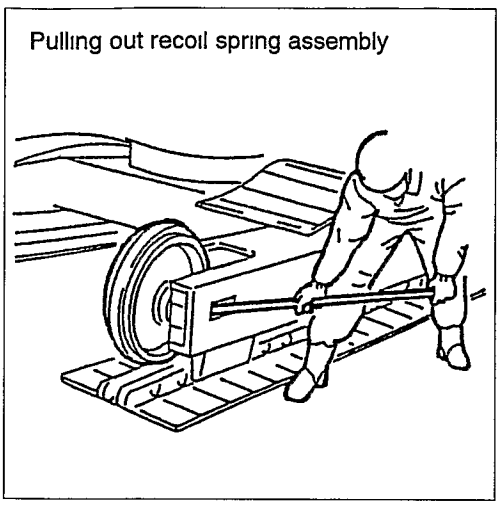


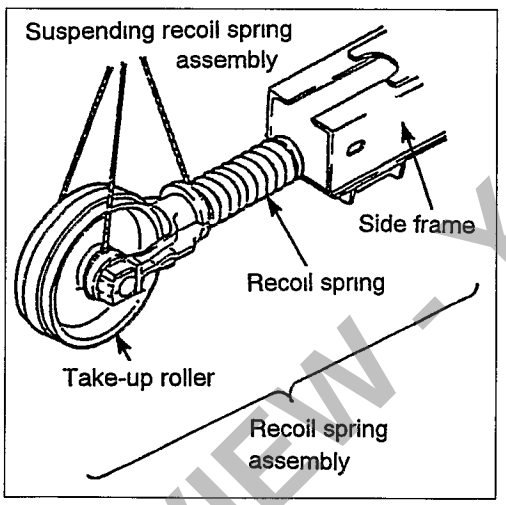


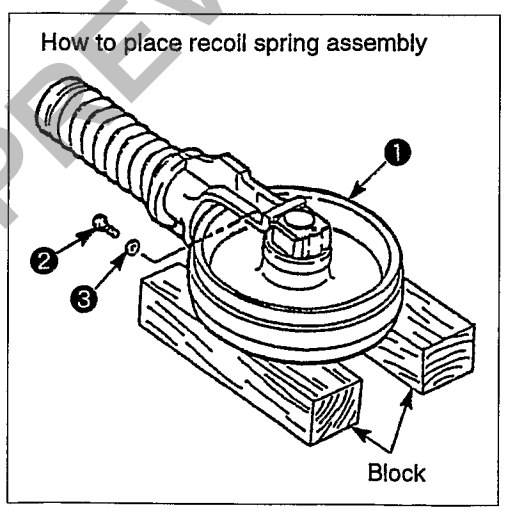


### Removal Procedure

1 Remove the track shoe (Refer to track shoe removal )
2 Using a steel bar, pull out the recoil spring assembly from the side frame
3 Fasten sling to the recoil spring assembly
4 Using the sling, lift the recoil spring assembly out of the side frame
5 Place the recoil spring assembly on blocks
6 Remove the take-up roller installation bolt, ❷ and separate into the take-up roller and recoil spring

### Installation Procedure

1 Apply Loctite #262 to the take-up roller installation bolt ❷
2 Tighten the take-up roller installation bolt ❷ to the specified torque and assemble the take-up roller and recoil spring
3 Fasten sling to the recoil spring assembly
4 Using the sling, place the recoil spring assembly on the side frame

Note) Set so the grease cylinder check valve is facing outward

5 Using a steel bar, set the recoil spring assembly to the side frame
6 Install the track shoe (Refer to track shoe installation )



PREVIEW - YOUFIXTHIS.COM

Download full manual at youfixthis.com

# 5 3, ATTACHMENT

| | | |
|---|---|---|
| 5 | 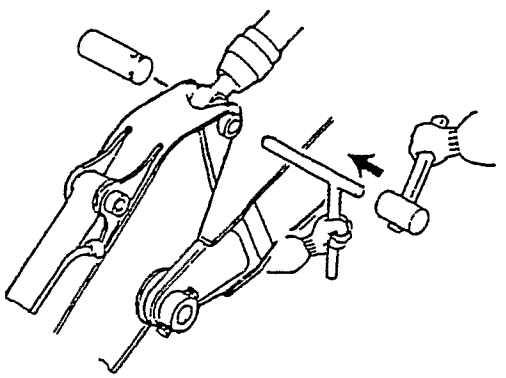 | Drive out the pin, using a bar and hammer |
| 6 | 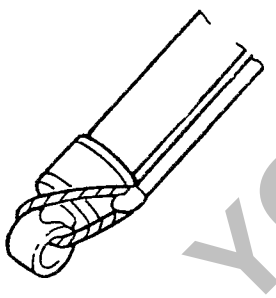 | Fasten a wire to the arm cylinder to prevent the piston rod from extending |
| 7 | 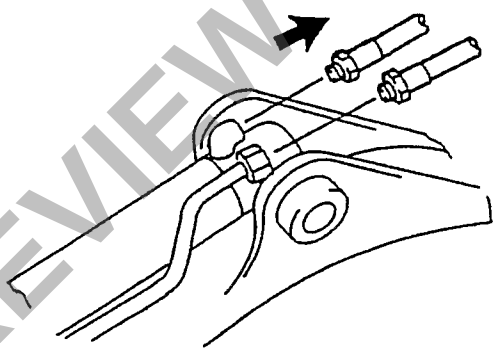 | Remove the arm cylinder hoses Install plugs or caps to prevent contamination |
| 8 | 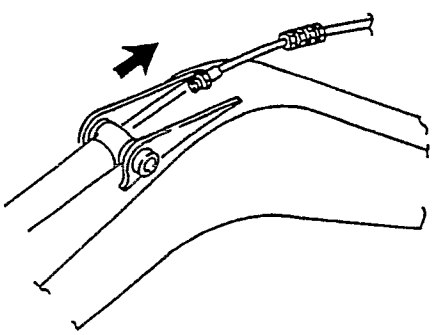 | Remove the grease tube from the arm cylinder |



PREVIEW - YOUFIXTHIS.COM

Download full manual at youfixthis.com

## 3 Disassembly and Assembly Procedures

### 3-1 Disassembly Procedures

1) Preparation

Before disassembling, make adequate preparations

a) Stand with vice

Use a work stand which has sufficient space for placing parts and doing work

b) Tools and jigs

Refer to the previous page regarding tools and jigs

2) General instructions

a) Be careful not to drop the precision parts or hit against other parts during work

b) Do not try to force or hit the parts in order to finish the work quickly In order to prevent deformation of the parts, oil leakage and loss of efficiency, work with care and patience

c) Disassembled parts are likely to become rusty or dusty, so treat for rust or dust prevention immediately after disassembling

3) Disassembly

| | | |
|---|---|---|
| 1 | 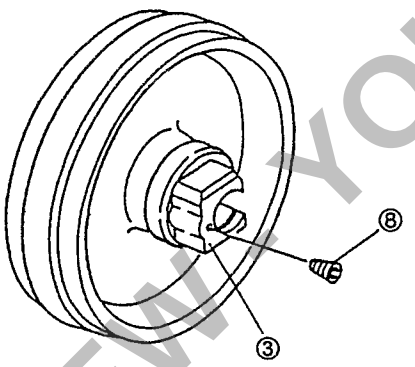 | 1) Wash the take-up roller with kerosene<br>2) Pull out the plug ⑧ from the hub ③ and drain the oil |
| 2 | 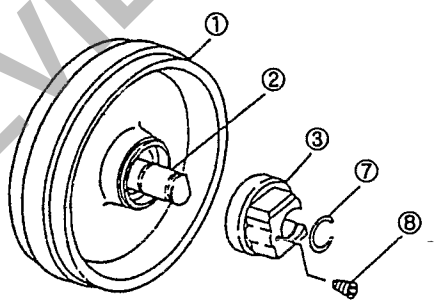 | 1) Remove the wire clip ⑦ (or spring pin ⑦) from the shaft<br>*Remove from only one side<br>※ Do not reuse wire clip ⑦ (or spring pin ⑦)<br>2) Remove the hub ③ from the shaft ②<br>*Remove from only one side |



PREVIEW OF YOUFIXTHIS.COM

Download full manual at youfixthis.com

# 6 6, ROTATING JOINT

## 4-2 Parts Storage

(1) Metallic Parts Storage

1) Rust Prevention Method

After carrying out cleaning work outlined in (4)-1, apply rust inhibitor with a brush

After completing coating with rust inhibitor, cover with a vinyl sheet or paper If necessary, tape down the cover

2) Storage Method

Place the parts which have been treated for rust prevention one by one on a shelf to store Never store by stacking

(2) Rubber Products Storage

1) Storage Method

Store in a place out of direct sunlight and that does not become hot, in order to prevent aging of the O-ring and other rubber parts

2) Storage Period

The maximum storage period is one year Do not use parts stored for a longer time

PREVIEW - YOUFIXTHIS.COM



Download full manual at youfixthis.com

# 7 1, HYDRAULIC PUMP

| | Process photograph | Description |
|---|---|---|
| 9 |  | • Using jig No 5 and a press, press-fit the bearing ⑬ into the shaft ⑤<br>※If a press is not available, a hammer can be used to fit the bearing in place In this case, take care not cause scratches or damage to the shaft and other parts |
| 10 |  | • Put the bearing cage ⑭ and roller parts on the swash plate "F" ⑦.<br>Set the guide assembly ㉑ in the cutout of the bearing cage so that it stands upright |
| 11 | 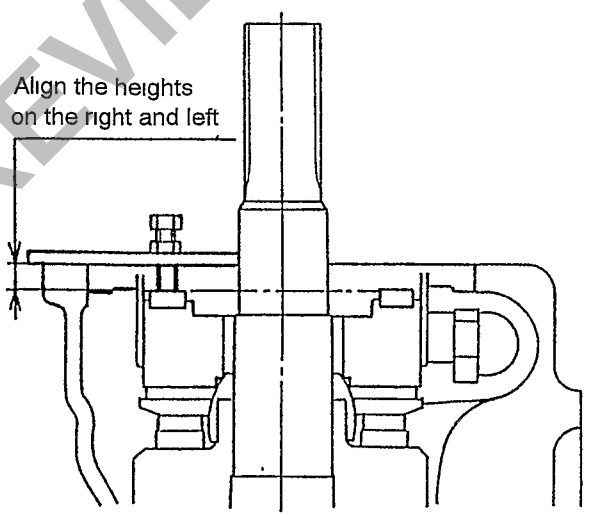 | • Using jig No 6 adjust the swash plate ⑦ so that it is parallel with the end surface of the body ① |



PREVIEW - YOUFIXTHIS.COM

Download full manual at youfixthis.com

# 7 2, TRAVEL MECHANISM

## 1) Operating Principle and Precautions for Use

**Purpose:** This section explains the operating principles and precautions of the travel mechanism For disassembly and maintenance procedures, refer to "72-02-05"

**Note:**

1) Before beginning work, wear protective gear and adhere to precautionary measures in order to safely conduct work

2) Bleed pressure from hydraulic circuit before beginning work
Caution) Refer to the page on bleeding hydraulic pressure procedures in the 05 Precautions section

3) When suspending a load
- The crane is to be operated by a licensed person
- Do not go underneath the suspended load

Table of Contents is listed on Page 2

PREVIEW - YOUFIXTHIS.COM



Download full manual at youfixthis.com

| Disassembly procedures | Precautions | Tools |
|---|---|---|
| 7) Take the swash plate [103] out of the spindle [2] Then, remove the thrust plate [153] from the swash plate<br>8) Take the steel balls [167] (2 pcs) out of the spindle [2]<br>9) Take the 2-speed switch piston assembly (piston [161], shoe [162]) and spring [179] out of the spindle [2] | • Removing the thrust plate [153] may be difficult due to the contact with the mating surface of the swash plate [103] In this case, insert a pry bar between the swash plate and the thrust plate and lightly lift it up The thrust plate will be easily removed<br>• Since the piston [161] and shoe [162] are a matched set, replace these parts as a piston kit if replacement is necessary | • pty bar |
| 3 Disassembling the parts inside the cylinder block<br>1) Place the cylinder block [104] on the press workbench While pressing the press fitting (1) against the washer [110], remove the round R-shaped snap ring [145] with pliers for snap ring<br> 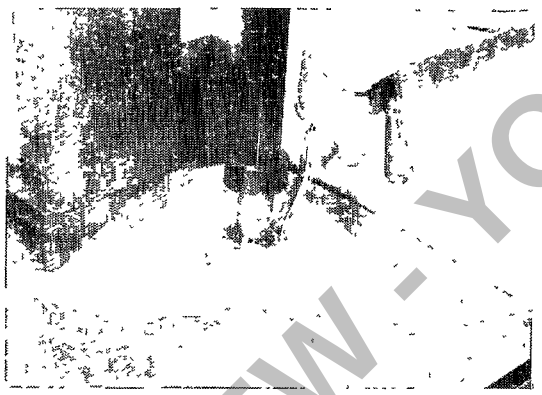 <br>2) Remove in order, the round R-shaped snap ring [145], washer [110], spring [114] and washer [110] from the cylinder block [104]<br> 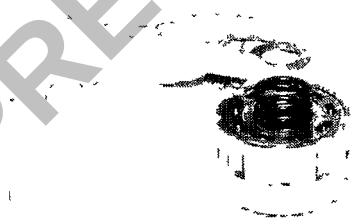 | • Press load 256 lbs (120kg) or more<br>• Cover the sliding part of the cylinder block with a vinyl sheet for protection<br>• Do not remove the spring [114] unless it needs to be replaced | • Press workbench<br>• Press fitting (1)<br>• Pliers for snap ring |



PREVIEW - YOUFIXTHIS.COM

Download full manual at youfixthis.com

## 1. Maintenance Outline

### 1-1 Assembly cross-sectional drawing

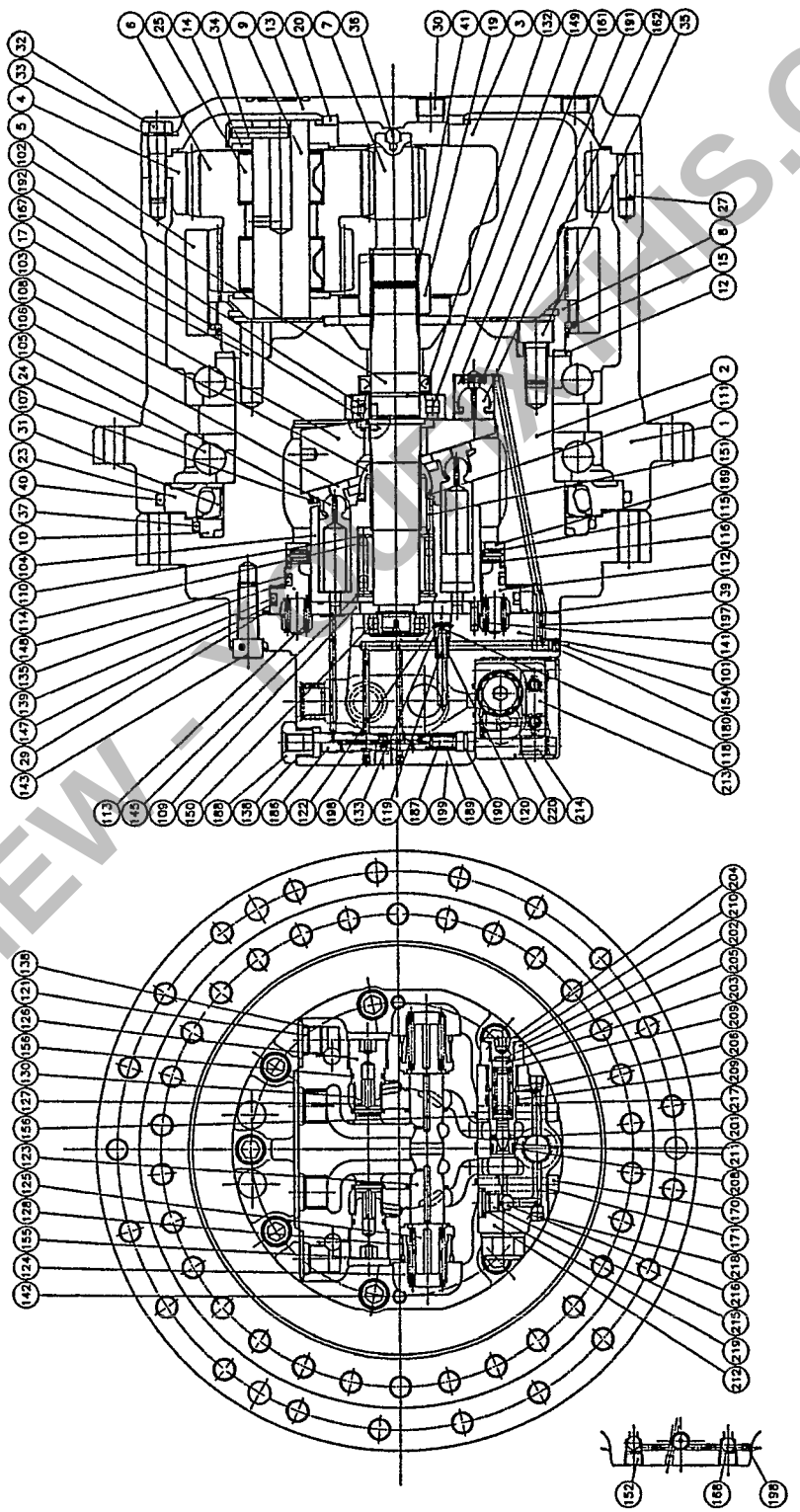

PREVIEW - YOUFIXTHIS.COM



Download full manual at youfixthis.com

# 7 2, TRAVEL MECHANISM

## 2) Disassembly and Maintenance Procedures

| Assembly procedure | Cautions | Tools |
|---|---|---|
| 8 Assembly of piston assembly parts [161] [162]<br>1) Assemble the piston assembly parts [161] [162] and spring [191] into piston hole in the spindle [2] | | |
| 9 Assembly of pivot [167]<br>1) Insert the two pins [171] into the spindle [2] and assemble the two pivots [167] | | |
| 10 Assembly of cylinder block inner parts<br>1) Insert the washer [110], spring [114] and washer [110] into the cylinder block [104], and then set the THS snap ring [145] | | |

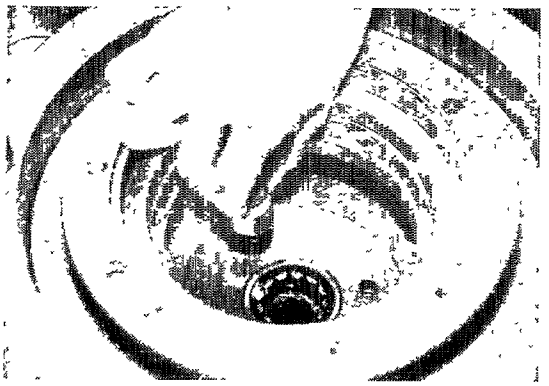

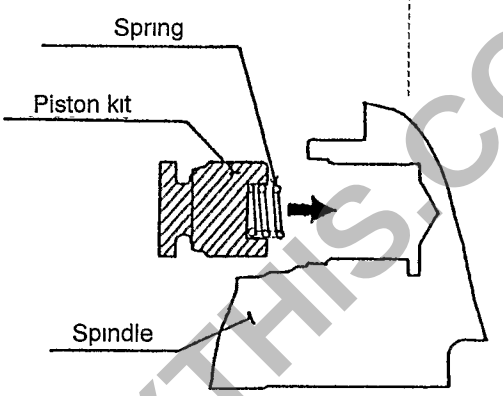


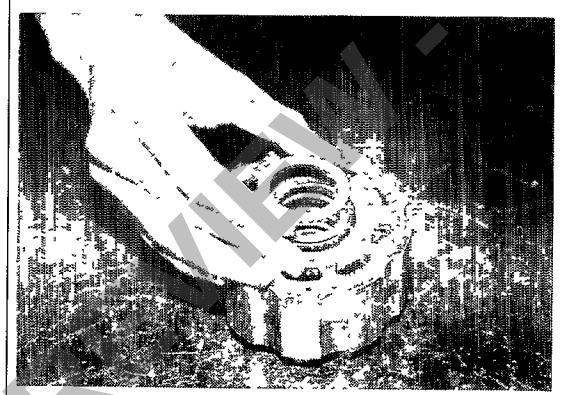



PREVIEW - YOUFIXTHIS.COM

Download full manual at youfixthis.com

### 3-10 Removal of brake unit springs ⑭

Remove the springs ⑭ from the brake piston ⑫

※ Keep the springs in the order in which they are to be reinserted



### 3-11 Removal of brake piston

※ It may be difficult to remove the piston ⑪ from the housing ㉔ due to the large sliding resistance caused by the fitting allowance of the O-rings ⑪ ⑬ Therefore, remove the piston ⑪ using the tapped M6 holes as shown in the photograph

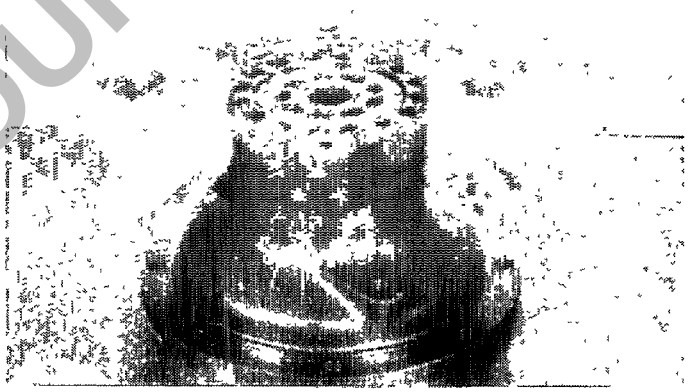

### 3-12

Remove the O-ring ⑪ from the housing ㉕ and the O-ring ⑬ from the piston ⑫

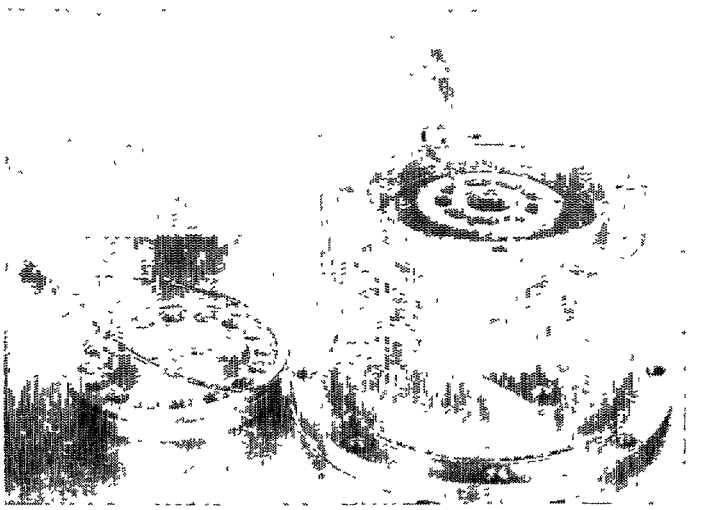



PREVIEW - YOUFIXTHIS.COM

Download full manual at youfixthis.com

## 1. Outline

☆ This control valve is structured to be able to deal with each type of hydraulic circuit and it is possible to attach each type of valve to it It is a composite control valve designed for the following purposes

A Control the direction of the oil flow

B Operate the hydraulic mechanism smoothly, accurately and safely

C Maintain the hydraulic circuit pressure within the scheduled range

☆ This control valve

1 Has an open center bypass passage

2 The control valve main circuit is a tandem circuit A plunger which is located upstream gives priority to the actuator and also employs the semi-parallel circuit and makes possible the simultaneous operation of the actuator

3 On the delivery passage, for each plunger there are the load check for tandem from the bypass passageway and the load check for parallel from the parallel passageway which are compactly attached to the central upper part of the housing so it is possible to hold the load until it reaches the position to where it is being moved

4 Operation method of each plunger depends on the hydraulic pilot operation Each plunger has a metering notch on each position which takes into account the metering characteristics



PREVIEW - YOUFIXTHIS.COM

Download full manual at youfixthis.com

PREVIEW - YOUFIXTHIS.COM

Download full manual at youfixthis.com

PREVIEW - YOUFIXTHIS.COM

Download full manual at youfixthis.com

2) Disassembly Procedures

2-1) Drain oil

2-2) Disconnect lines

2-3) Position the cylinder

※ Position the cylinder in a vertical or horizontal position The vertical position is more favorable for disassembly/reassembly work Use the bottom pin hole for preventing the cylinder from turning on its axis and for fixing the cylinder in the axial position

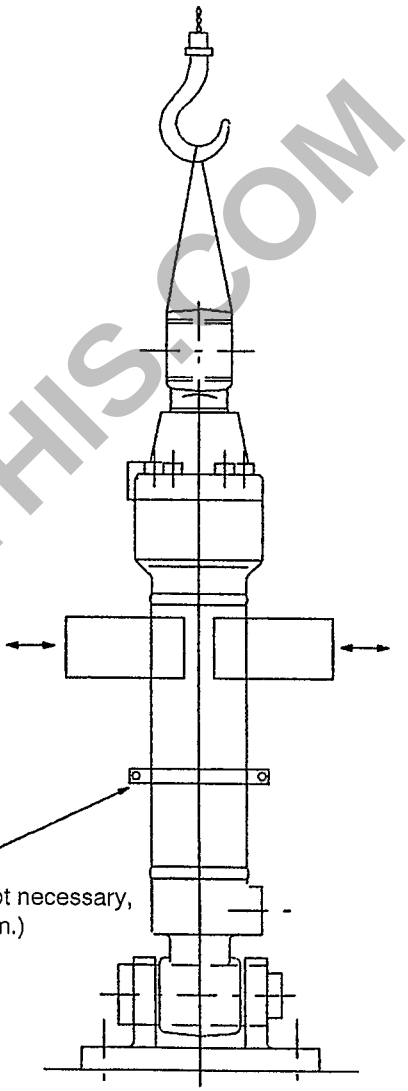

2-4) Remove the cylinder head bolts (12) with an Allen

※ wrench Use an extension pipe such as shown in the figure below for facilitating bolt loosening

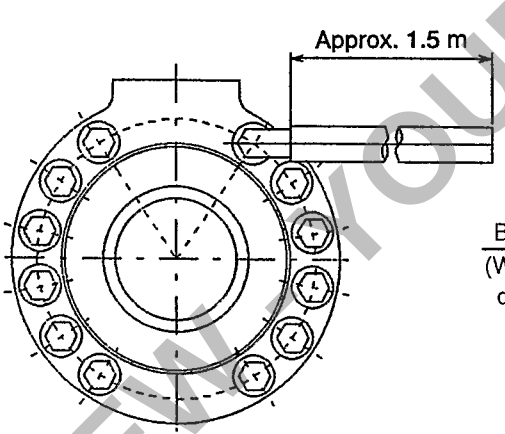


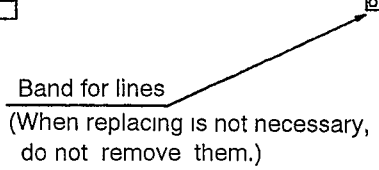


2-5) Pull out the piston rod

- Make sure that the line ports are opened
- Collect oil coming out the retraction side (cylinder head side) port
- With the piston rod extended fully, pull out the cylinder head gradually
- Lay down the piston rod and the cylinder head together on wood blocks

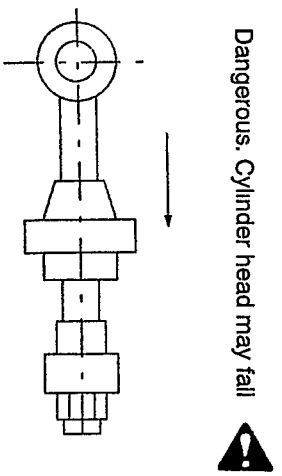


⚠ • If all bolts are removed first, the cylinder head may be lifted together with the piston rod It can fall causing injury or damage.



PREVIEW FROM YOUFIXTHIS.COM
Download full manual at youfixthis.com

# 77, Valve (8-Spool Solenoid Valve)



## 1. Overall Drawing (unit inch (mm)) — 2650

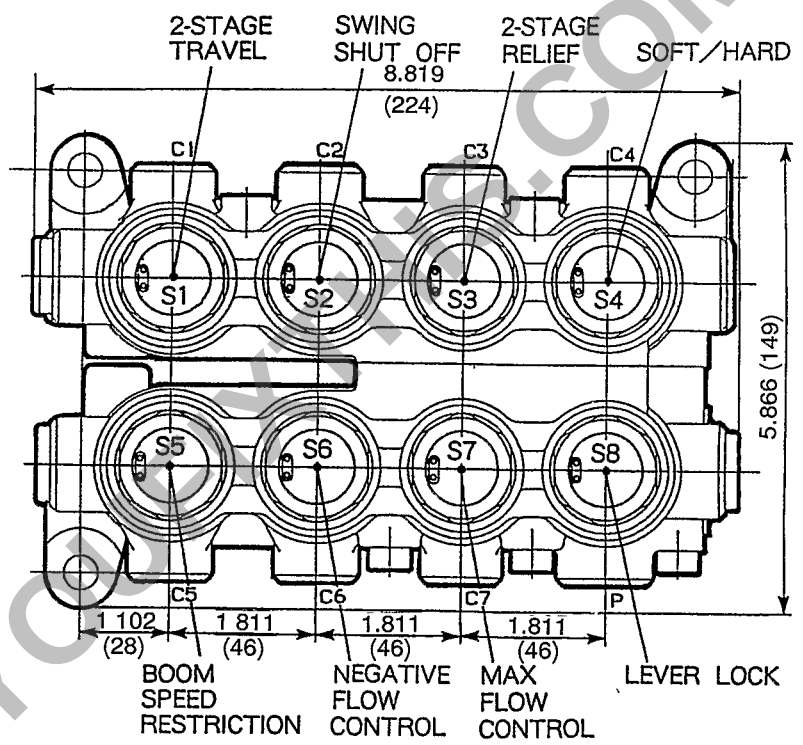


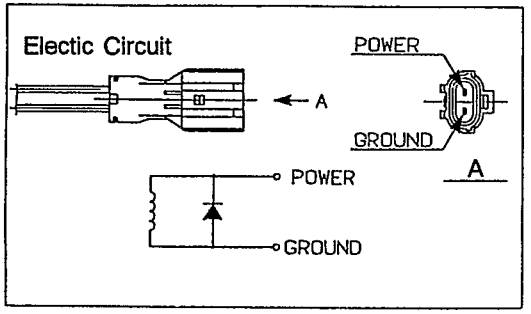


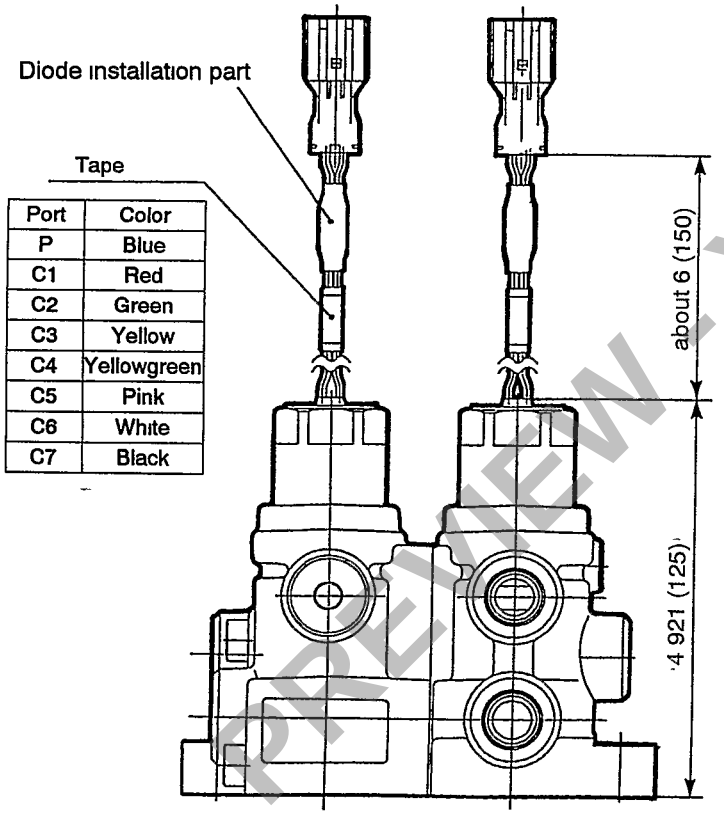


| Port | Color |
|---|---|
| P | Blue |
| C1 | Red |
| C2 | Green |
| C3 | Yellow |
| C4 | Yellowgreen |
| C5 | Pink |
| C6 | White |
| C7 | Black |

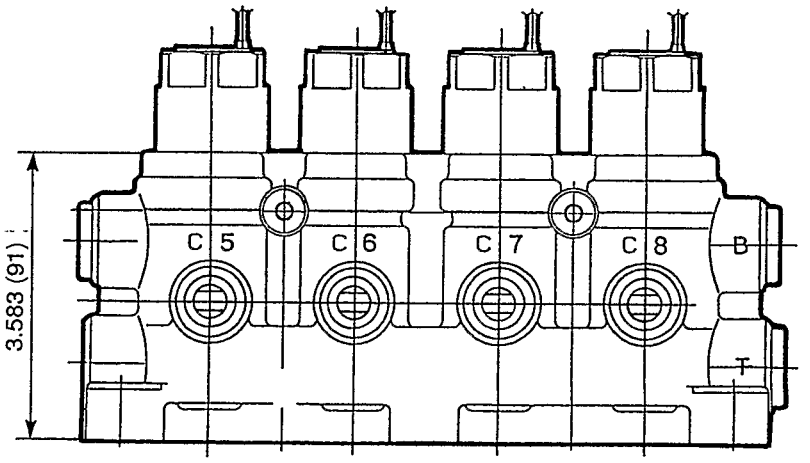




PREVIEW - YOUFIXTHIS.COM

Download full manual at youfixthis.com

# PREVIEW ONLY

You're viewing 25 of 782 pages

## The full manual includes:

- All 782 pages, complete
- Searchable PDF (find any keyword)
- No watermarks
- Instant download
- Print-ready quality

GET FULL MANUAL NOW

**Link-belt 2650Q, 2700Q Shop Manual**

**Scan or click anywhere**
**youfixthis.com**

*Click anywhere on this page to get the full manual*