PREVIEW - YOUFIXTHIS.COM

Blurred on purpose. The manual you buy has this page in full quality.

Download full manual at youfixthis.com

# 5 1, LOWER MECHANISM

## Removal and Installation

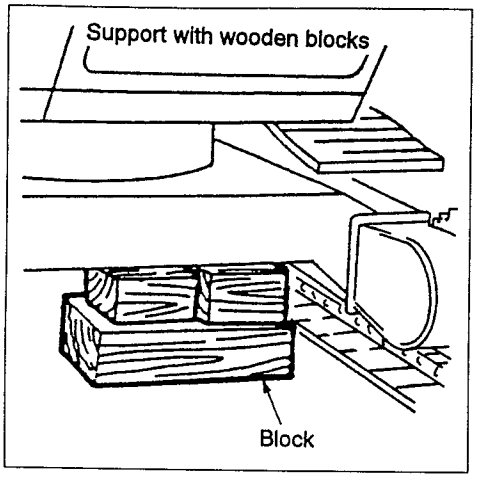


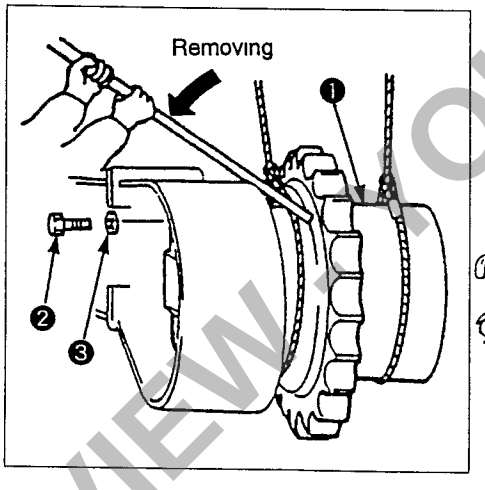


Bolt Tightening Order

• After tightening the 4 bolts in order as in the figure, tighten the other bolts.

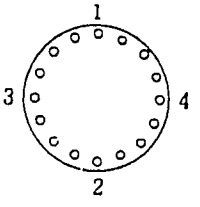


### Removal Procedures

1 Remove the track shoe (Refer to the track shoe removal.)
2 Raise one side of the lower frame to about 8" (20cm) (Raise high enough to permit drive sprocket removal )
3 Put wooden blocks underneath the lower frame
4 Stop the engine and operate the control lever to relieve pressure in the hydraulic system (Refer to 05 Precautions for hydraulic oil pressure release )
5 Remove the motor cover
6 Attach identification tag to the travel motor hose for reconnection purposes
7 Disconnect the hoses and install blind caps or plugs to prevent dust
8 Fasten sling to travel equipment Note) Lift only enough that the wire rope becomes tight
9 Remove the travel equipment installation bolts ❷
10 Use a steel bar to remove the travel equipment

### Installation Procedures

1 Lift the travel equipment and align it to the installation position of the frame (Be careful of installation angle )
2 Apply Loctite #262 to the thread of travel equipment installation bolts ❷ and tighten temporarily
3 Tighten the bolts alternately to the standard torque such that the tightening force is even on all bolts
4 Connect the hoses to the travel motor
5 Check the gear oil level of the reduction gear and refill if insufficient
6 Bleed air from the travel motor (Fill motor with hydraulic oil )
7 Remove the wooden blocks
8. Place the lower frame on the track shoe
9 Install the track shoe (Refer to track shoe installation )
10 Check for oil leakage Repair if leakage is found
11 Install the motor cover



PREVIEW - YOUFIXTHIS.COM

Download full manual at youfixthis.com

PREVIEW - YOUFIXTHIS.COM

**Blurred on purpose. The manual you buy has this page in full quality.**

Download full manual at youfixthis.com

| | ポート名 PORT NAME | ポートサイズ PORT SIZE |
|---|---|---|
| $A_{1,2}$ | 吐出ポート DELIVERY PORT | SAE6000 3/4" |
| $B_1$ | 吸入ポート SUCTION PORT | SAE2500 2 1/2" |
| $D_r$ | ドレンポート DRAIN PORT | G 3/4-20 |
| $P_{11,2}$ | パイロットポート PILOT PORT | G 1/4-15 |
| $P_{m1,2}$ | 最大流量カットポート $Q_{max}$ CUT PORT | G 1/4-15 |
| $P_{SV}$ | サーボアシストポート SERVO ASSIST PORT | G 1/4-15 |




## 6. Outline, Structural and Development Elevation Diagrams

PREVIEW - YOUFIXTHIS.COM

**Blurred on purpose. The manual you buy has this page in full quality.**

Download full manual at youfixthis.com

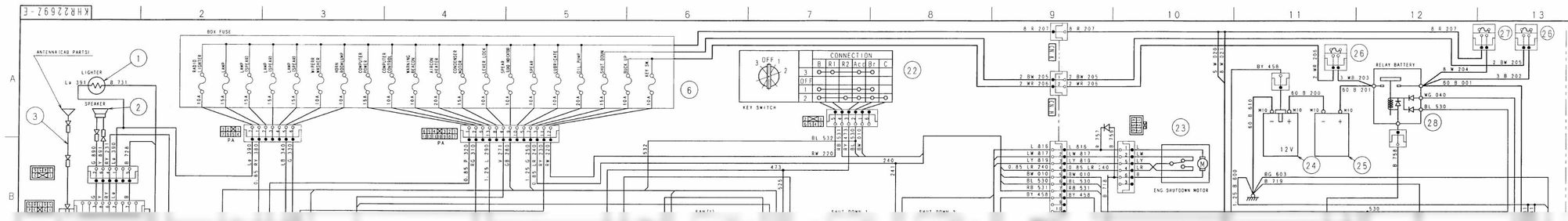


| PART NO. | DESCRIPTION | SYM | MATERIAL GROUP | QTY | TOTAL WT.(kg) | STANDARD NO. | REMARKS |
|---|---|---|---|---|---|---|---|
| KHR12402E-A | LIGHTER:CIGAR | 1 | | 1 | - | | SPIKE |
| KHR09611Y-A | SPEAKER | 2 | | 1 | - | | SANYO DENKI |
| KHR09008E-A | CORD:ANTENNA | 3 | | 1 | - | | HITACHI DENSO |
| KHR15271E-A | RADIO:SET | 4 | | 1 | - | | SANYO DENKI |
| KHR17911X-B | CONTROLLER | 5 | | 1 | - | | STANLEY |
| KHR15866E-B | BOX:FUSE | 6 | | 1 | - | | MIZUNO JIDOUSHA |
| KHR17263-B | PANEL:SWITCH(LH) | 7 | | 1 | - | | NIPPON SEIKI |
| KHR17271X-B | PANEL:SWITCH(RH) | 8 | | 1 | - | | NIPPON SEIKI |
| KHN14431Y-A | SWITCH:LIMIT | 9 | | 1 | - | | TAKARAJUSHI [EA07] |
| KHN14321Y-A | SWITCH:LIMIT | 10 | | 1 | - | | TAKARAJUSHI [EA07] |
| KHJ0740Y-B | KNOB(SWITCH) | 11 | | 1 | - | | NISHIYAMA |
| KHR17393-B | PANEL:SWITCH(RH) | 12 | | 1 | - | | NIPPON SEIKI |
| KHR16086E-A | SWITCH:SPL | 13 | | 1 | - | | TOKOE SHOUKAI [EC05] |
| | KNOB(SWITCH) | | | | | | NISHIYAMA |

Blurred on purpose. The manual you buy has this page in full quality.
PREVIEW - YOUFIXTHIS.COM
Download full manual at youfixthis.com

# 01, SHOP MANUAL 2800/3400 CONTENTS

| 1st Edition March, 1994 | 1/7 |
|---|---|

Distribution Date


0, SHOP MANUAL EXPLANATION

| | | | |
|---|---|---|---|
| 0 1, | Contents | 94 | 8 |
| 0 2, | Safety | 94 | 8 |
| 0 3, | Introduction | 94 | 8 |
| 0 4, | Symbols Used | 94 | 8 |
| 0 5, | Precautions | 94 | 8 |
| 0 6, | Standard Torque Specifications | 94 | 8 |
| 0 7, | Numerical Value Conversion Table | 94 | 8 |

1, GENERAL
(Material for special course)

(Refer to Srevice Text)

2, SPECIFICATIONS

| | | | |
|---|---|---|---|
| 2 1, | Major Equipments Specifications | 94 | 8 |
| 2 2, | Main Body, Oils Grease | 94 | 8 |

3, PERFORMANCE

| | | | |
|---|---|---|---|
| 3 1, | Main Body Weight | 94 | 8 |
| 3 2, | New Machine Performance Check List | 94 | 8 |
| 3 3, | Suspension Performance | 94 | 8 |

4, MISSING NUMBER

5, MAIN BODY DISASSEMBLY AND SERVICING PROCEDURES

| | | | |
|---|---|---|---|
| 5 1, | Lower Mechanism | 94 | 8 |
| 5 2, | Upper Mechanism | | |
| 5 3, | Attachment | 94 | 8 |
| 5 4, | Maintenance Standards | 94 | 8 |

6, MAJOR COMPONENTS DISASSEMBLY AND SERVICING PROCEDURES

| | | | |
|---|---|---|---|
| 6 1, | Tightening Torque for Major Parts | 94 | 8 |
| 6 2, | Take-Up Roller | 94 | 8 |
| 6 3, | Upper Roller | 94 | 8 |
| 6 4, | Lower Roller | 94 | 8 |
| 6 5, | Recoil Spring | 94 | 8 |
| 6 6, | Rotating Joint | 94 | 8 |

7, MAJOR HYDRAULIC COMPONENT DISASSEMBLY AND SERVICING PROCEDURES

| | | | |
|---|---|---|---|
| 7 1, | Hydraulic Pump | 94 | 8 |
| 7 2 | Travel Equipment | 94 | 8 |
| 7 3 | Swing Equipment | 94 | 8 |
| 7 4, | Control Valve | 94 | 8 |
| 7 5 | Hydraulic Cylinder | 94 | 8 |
| 7 6, | Remote Control Valve | 94 | 8 |
| 7 7, | Valve | 94 | 8 |


PREVIEW - YOUFIXTHIS.COM

Download full manual at youfixthis.com

# 02, SAFETY

**Areas marked with ⚠ are especially important regarding safety. Read and understand well before beginning work.**

1 When doing servicing work, first read the data (Operator s Manual Service Text) and understand the contents well before beginning work

2 When assembling or disassembling, take sufficient safety measures to prevent accidents such as falling loads becoming pinned, fire, etc (When doing servicing underneath the machine, block the machine with blocking, etc to prevent getting pinned by the machine

3 When suspending loads with a crane, a licensed operator should do the work
① The crane operator and workman who does the rigging should be licensed to do so
② Rigging must be inspected

4 When conducting inspection or servicing, wear clothing suitable for the job and also wear protective gear according to the nature of the work
(Safety shoes, helmet, safety glasses gloves, ear plugs, dust mask etc )

5 Pay attention Keep a clean, orderly work area to prevent slips or falls

6 When conducting inspection or servicing inside provide proper ventilation

7 Be prepared for any emergencies and take adequate fire-preventative measures


Download full manual at youfixthis.com
PREVIEW - YOUFIXTHIS.COM

PREVIEW - YOUFIXTHIS.COM

Download full manual at youfixthis.com

# 0 7, NUMERICAL VALUE CONVERSION TABLE

## TEMPERATURE

### FAHRENHEIT TO CENTIGRADE

| °F | °C | °F | °C | °F | °C | °F | °C | °F | °C | °F | °C | °F | °C | °F | °C |
|---|---|---|---|---|---|---|---|---|---|---|---|---|---|---|---|
| –60 | –51 1 | –2 | –18 9 | 56 | 13 3 | 114 | 45 6 | 172 | 77 8 | 230 | 110 0 | 288 | 142 2 | 346 | 174 4 |
| –58 | –50 | 0 | –17 8 | 58 | 14 4 | 116 | 46.7 | 174 | 78 9 | 232 | 111 1 | 290 | 143 3 | 348 | 175 6 |
| –56 | –48 9 | 2 | –16 7 | 60 | 15 6 | 118 | 47 8 | 176 | 80 0 | 234 | 112 2 | 292 | 144 4 | 350 | 176 7 |
| –54 | –47 8 | 4 | –15 6 | 62 | 16 7 | 120 | 48 9 | 178 | 81 1 | 236 | 113 3 | 294 | 145 6 | 352 | 177 8 |
| –52 | –46 7 | 6 | –14 4 | 64 | 17 8 | 122 | 50 0 | 180 | 82 2 | 238 | 114 4 | 296 | 146 7 | 354 | 178 9 |
| –50 | –45 6 | 8 | –13 3 | 66 | 18 9 | 124 | 51 1 | 182 | 83 3 | 240 | 115 6 | 298 | 147 8 | 356 | 180 0 |
| –48 | –44 4 | 10 | –12 2 | 68 | 20 0 | 126 | 52 2 | 184 | 84 4 | 242 | 116 7 | 300 | 148 9 | 358 | 181 1 |
| –46 | –43 3 | 12 | –11 1 | 70 | 21 1 | 128 | 53 3 | 186 | 85 6 | 244 | 117 8 | 302 | 150 0 | 360 | 182 2 |
| –44 | –42 2 | 14 | –10 0 | 72 | 22 2 | 130 | 54 4 | 188 | 86 7 | 246 | 118 9 | 304 | 151 1 | 362 | 183 3 |
| –42 | –41 1 | 16 | –8 9 | 74 | 23 3 | 132 | 55 6 | 190 | 87 8 | 248 | 120 0 | 306 | 152 2 | 364 | 184 4 |
| –40 | –40 0 | 18 | –7.8 | 76 | 24 9 | 134 | 56 7 | 192 | 88 9 | 250 | 121 1 | 308 | 153 3 | 366 | 185 6 |
| –38 | –38 9 | 20 | –6 7 | 78 | 25 6 | 136 | 57 8 | 194 | 90 0 | 252 | 122 2 | 310 | 154 4 | 368 | 186 7 |
| –36 | –37 8 | 22 | –5 6 | 80 | 26 7 | 138 | 58 9 | 196 | 91 1 | 254 | 123 3 | 312 | 155 6 | 370 | 187 8 |
| –34 | –36 7 | 24 | –4 4 | 82 | 27 8 | 140 | 60 0 | 198 | 92 2 | 256 | 124 4 | 314 | 156 7 | 372 | 188 9 |
| –32 | –35 6 | 26 | –3 3 | 84 | 28 9 | 142 | 61 1 | 200 | 93 3 | 258 | 125 6 | 316 | 157 8 | 374 | 190 0 |
| –30 | –34 4 | 28 | –2 2 | 86 | 30 0 | 144 | 62 2 | 202 | 94 4 | 260 | 126 7 | 318 | 158 9 | 376 | 191 1 |
| –28 | –33 3 | 30 | –1 1 | 88 | 31 1 | 146 | 63 3 | 204 | 95 6 | 262 | 127 8 | 320 | 160 0 | 378 | 192 2 |
| –26 | –32 2 | 32 | –0 | 90 | 32 2 | 148 | 64 4 | 206 | 96 7 | 264 | 128 9 | 322 | 161 1 | 380 | 193 3 |
| –24 | –31 1 | 34 | 1 1 | 92 | 33 3 | 150 | 65 6 | 208 | 97 8 | 266 | 130 0 | 324 | 162 2 | 382 | 194 4 |
| –22 | –30 0 | 36 | 2 2 | 94 | 34 4 | 152 | 66 7 | 210 | 98 9 | 268 | 131 1 | 326 | 163 3 | 384 | 195 6 |
| –20 | –28 9 | 38 | 3 3 | 96 | 35 6 | 154 | 67 8 | 212 | 100 0 | 270 | 132 2 | 328 | 164 4 | 386 | 196 7 |
| –18 | –27 8 | 40 | 4 4 | 98 | 36 7 | 156 | 68 9 | 214 | 101 1 | 272 | 133 3 | 330 | 165 6 | 388 | 197 8 |
| –16 | –26 7 | 42 | 5 6 | 100 | 37 8 | 158 | 70 0 | 216 | 102 2 | 274 | 134 4 | 332 | 166 7 | 390 | 198 9 |
| –14 | –25 6 | 44 | 6 7 | 102 | 38 9 | 160 | 71 1 | 218 | 103 3 | 276 | 135 6 | 334 | 167 8 | 392 | 200 0 |
| –12 | –24 4 | 46 | 7 8 | 104 | 40 0 | 162 | 72 2 | 220 | 104 4 | 278 | 136 7 | 336 | 168 9 | 400 | 204 4 |
| –10 | –23 3 | 48 | 8 9 | 106 | 41 1 | 164 | 73 3 | 222 | 105 6 | 280 | 137 8 | 338 | 170 0 | 410 | 210 0 |
| –8 | –22 2 | 50 | 10 0 | 108 | 42 2 | 166 | 74 4 | 224 | 106 7 | 282 | 138 9 | 340 | 171 1 | 420 | 215 6 |
| –6 | –21 1 | 52 | 11 1 | 110 | 43 3 | 168 | 75 6 | 226 | 107 8 | 284 | 140 0 | 342 | 172 2 | 430 | 221 1 |
| –4 | –20 0 | 54 | 12 2 | 112 | 44 4 | 170 | 76 7 | 228 | 108 9 | 286 | 141 1 | 344 | 173 3 | 440 | 226 7 |

### CENTIGRADE TO FAHRENHEIT

| °C | °F | °C | °F | °C | °F | °C | °F | °C | °F | °C | °F | °C | °F | °C | °F |
|---|---|---|---|---|---|---|---|---|---|---|---|---|---|---|---|
| –50 | –58 0 | –18 | –0 4 | 14 | 57 2 | 46 | 114 8 | 78 | 172 4 | 110 | 230 0 | 142 | 287 6 | 174 | 345 2 |
| –49 | –56 2 | –17 | 1 4 | 15 | 59 0 | 47 | 116 6 | 79 | 174 2 | 111 | 231 8 | 143 | 289 4 | 175 | 347 0 |
| –48 | –54 4 | –16 | 3 2 | 16 | 60 8 | 48 | 118 4 | 80 | 176 0 | 112 | 233 6 | 144 | 291 2 | 176 | 348 8 |
| –47 | –52 6 | –15 | 5 0 | 17 | 62 6 | 49 | 120 2 | 81 | 177 8 | 113 | 235 4 | 145 | 293 0 | 177 | 350 6 |
| –46 | –50 8 | –14 | 6 8 | 18 | 64 4 | 50 | 122 0 | 82 | 179 6 | 114 | 237 2 | 146 | 294 8 | 178 | 352 4 |
| –45 | –49 0 | –13 | 8 6 | 19 | 66 2 | 51 | 123 8 | 83 | 181 4 | 115 | 239 0 | 147 | 296 6 | 179 | 354 2 |
| –44 | –47 2 | –12 | 10 4 | 20 | 68 0 | 52 | 125 6 | 84 | 183 2 | 116 | 240 8 | 148 | 298 4 | 180 | 356 0 |
| –43 | –45 4 | –11 | 12 2 | 21 | 69 8 | 53 | 127 4 | 85 | 185 0 | 117 | 242 6 | 149 | 300 2 | 181 | 357 8 |
| –42 | –43 6 | –10 | 14 0 | 22 | 71 6 | 54 | 129 2 | 86 | 186 8 | 118 | 244 4 | 150 | 302 0 | 182 | 359 6 |
| –41 | –41 8 | –9 | 15 8 | 23 | 73 4 | 55 | 131 0 | 87 | 188 6 | 119 | 246 2 | 151 | 303 8 | 183 | 361 4 |
| –40 | –40 0 | –8 | 17 6 | 24 | 75 2 | 56 | 132 8 | 88 | 190 4 | 120 | 248 0 | 152 | 305 6 | 184 | 363 2 |
| –39 | –38 2 | –7 | 19 4 | 25 | 77 0 | 57 | 134 6 | 89 | 192 2 | 121 | 249 8 | 153 | 307 4 | 185 | 365 0 |
| –38 | –36 4 | –6 | 21 2 | 26 | 78 8 | 58 | 136 4 | 90 | 194 0 | 122 | 251 6 | 154 | 309 2 | 186 | 366 8 |
| –37 | –34 6 | –5 | 23 0 | 27 | 80 6 | 59 | 138 2 | 91 | 195 8 | 123 | 253 4 | 155 | 311 0 | 187 | 368 6 |
| –36 | –32 8 | –4 | 24 8 | 28 | 82 4 | 60 | 140 0 | 92 | 197 6 | 124 | 255.2 | 156 | 312 8 | 188 | 370 4 |
| –35 | –31 0 | –3 | 26 6 | 29 | 84 2 | 61 | 141 8 | 93 | 199 4 | 125 | 257 0 | 157 | 314 6 | 189 | 372 4 |
| –34 | –29 2 | –2 | 28 4 | 30 | 86 0 | 62 | 143 6 | 94 | 201 2 | 126 | 258 8 | 158 | 316 4 | 190 | 374 0 |
| –33 | –27 4 | –1 | 30 2 | 31 | 87 8 | 63 | 145 4 | 95 | 203 0 | 127 | 260 6 | 159 | 318 2 | 191 | 375 8 |
| –32 | –25 6 | 0 | 32 0 | 32 | 89 6 | 64 | 147 2 | 96 | 204 8 | 128 | 262 4 | 160 | 320 0 | 192 | 377 6 |
| –31 | –23 8 | 1 | 33 8 | 33 | 91 4 | 65 | 149 0 | 97 | 206 6 | 129 | 264 2 | 161 | 321 8 | 193 | 379 4 |
| –30 | –22 0 | 2 | 35 6 | 34 | 93 2 | 66 | 150 8 | 98 | 208 4 | 130 | 266 0 | 162 | 323 6 | 194 | 381 2 |
| –29 | –20 2 | 3 | 37 4 | 35 | 95 0 | 67 | 152 6 | 99 | 210 2 | 131 | 267 8 | 163 | 325 4 | 195 | 383 0 |
| –28 | –18 4 | 4 | 39 2 | 36 | 96 8 | 68 | 154 4 | 100 | 212 0 | 132 | 269 6 | 164 | 327 2 | 196 | 384 8 |
| –27 | –16 6 | 5 | 41 0 | 37 | 98 6 | 69 | 156 2 | 101 | 213 8 | 133 | 271 4 | 165 | 329 0 | 197 | 386 6 |
| –26 | –14 8 | 6 | 42 8 | 38 | 100 4 | 70 | 158 0 | 102 | 215 6 | 134 | 273 2 | 166 | 330 8 | 198 | 388 4 |
| –25 | –13 0 | 7 | 44 6 | 39 | 102 2 | 71 | 159 8 | 103 | 217 4 | 135 | 275 0 | 167 | 332 6 | 199 | 390 2 |
| –24 | –11 2 | 8 | 46 4 | 40 | 104 0 | 72 | 161 6 | 104 | 218 2 | 136 | 276 8 | 168 | 334 4 | 200 | 392 0 |
| –23 | –9 4 | 9 | 48 2 | 41 | 105 8 | 73 | 163 4 | 105 | 221 0 | 137 | 278 6 | 169 | 336 4 | 210 | 410 0 |
| –22 | –7 6 | 10 | 50 0 | 42 | 107 6 | 74 | 165 2 | 106 | 222 8 | 138 | 280 4 | 170 | 338 0 | 220 | 428 0 |
| –21 | –5 8 | 11 | 51 8 | 43 | 109 4 | 75 | 167 0 | 107 | 224 6 | 139 | 282 2 | 171 | 339 8 | 230 | 446 0 |
| –20 | –4 4 | 12 | 53 6 | 44 | 111 2 | 76 | 168 8 | 108 | 226 4 | 140 | 284 0 | 172 | 341 6 | 240 | 464 0 |
| –19 | –2 2 | 13 | 55 4 | 45 | 113 0 | 77 | 170 6 | 109 | 228 2 | 141 | 285 8 | 173 | 343 4 | 250 | 482 0 |

PREVIEW - YOUFIXTHIS.COM



Download full manual at youfixthis.com

## 3. 2800 LUBRICATION AND ELEMENT REPLACEMENT

| Ref No | Description | | No Points | Specification | Interval (hr) 50 | 250 | 500 | 1000 | 3000 | 5000 |
|---|---|---|---|---|---|---|---|---|---|---|
| ① | Front Attachment Pin | | 16 | E P Grease No 2 | ○ | | | | | |
| ② | Turntable Bearing | | 3 | | | ○ | | | | |
| ③ | Swing Ring Gear | | 17kg, 37lb | | | | ○ | | | |
| ④ | Engine Oil Pan | | 25ℓ , 6 6gal | Engine Oil | | | ◎ | | | |
| ⑤ | Swing Gear Reducer | | 5ℓ , 1 3gal | Gear Oil | | △ | | ◎ | | |
| ⑥ | | | 1ℓ , 0 3gal | E P Grease No 2 | | | | | ○ | |
| ⑦ | Travel Gear Reducer | | 4 7ℓ ×2, 1 2gal ×2 | Gear Oil | | △ | | ◎ | | |
| ⑧ | Hydraulic Sump Tank | | 203ℓ , 53 6gal | Hydraulic Oil | | | | | | ◎ |
| ⑨ | Engine Radiator | | 25 5ℓ , 6 7gal | Water with Long Life Coolant | Every 2 years | | | | | |
| ⑩ | Fuel Tank | | 310ℓ , 81 9gal | Light Oil | When required | | | | | |
| A | Pilot Line Filter | | 1 | Element | △ | | | ◎ | | |
| B | Fuel Filter | | 1 | Element | | | ◎ | | | |
| C | Engine Oil Filter | By-pass | 1 | Element | | | ◎ | | | |
| D | | Full-flow | 1 | Element | | | ◎ | | | |
| E | Return Filter | | 1 | Element | △ | | | ◎ | | |
| F | Suction Filter | | 1 | Element | | | | □ | | ◎ |
| G | Drain Filter | | 1 | Element | △ | | | ◎ | | |
| H | Air Cleaner | Outer | 1 | Element | | □ | | ◎ | | |
| I | | Inner | 1 | Element | | □ | | ◎ | | |
| J | Air Breather | | 1 | Element | | | | ◎ | | |
| K | Nephron Filter | | 1 | Element | | | | ◎ | | |

○ Lubricate grease
△ Change initially
◎ Change oil or replace element
□ Clean

Recommended grease and oil specifications are as follows
E P Grease Lithium Grease No 2
Engine Oil API CD SAE 15W – 40
Gear Oil API GL-4 SAE 90
Hydraulic Oil ISO VG 32

Notes 1 Attachment should be lubricated daily when used in dusty environments or under water
2 Refer to recommended oil specifications in detail shown in the operator's manual
3 Refer to the engine instruction manual
4 Interval - Hours on this chart are based on SAE J752B asfollows
50 (or weekly ) * 1000 (or 6 months) *
250 (or monthly) * 3000 (or 1 5 years) *
500 (or 3 months) * 5000 (or 2 5 years) *
*whichever occurs first
5 Remove the air deflation plug in lubricating grease for swing gear reducer
Refer to the operator's manual for details

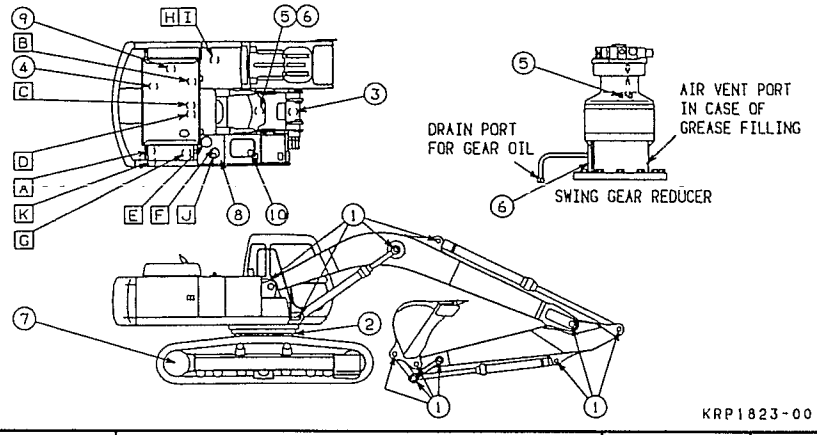




PREVIEW - YOUFIXTHIS.COM
Download full manual at youfixthis.com

# 5 1, LOWER MECHANISM

## ⑧ TRACK SHOE

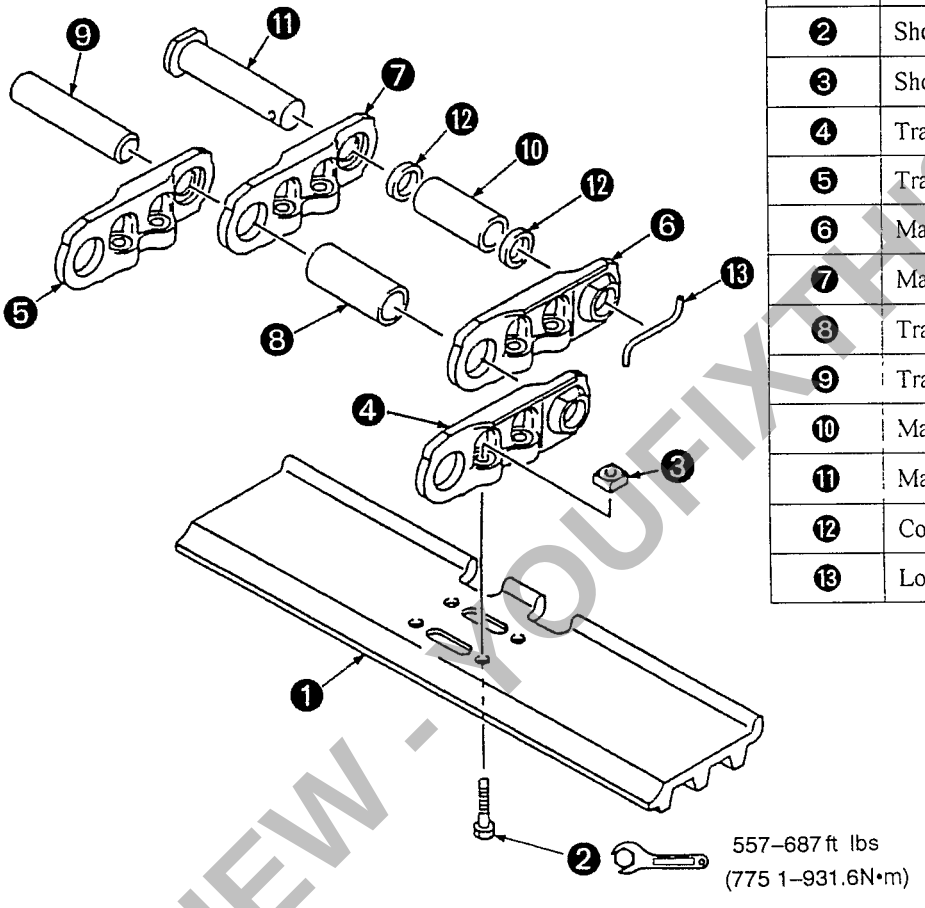


| Symbol | Part Name |
|---|---|
| ❶ | Shoe plate |
| ❷ | Shoe bolt |
| ❸ | Shoe nut |
| ❹ | Track link (Right) |
| ❺ | Track link (Left) |
| ❻ | Master link (Right) |
| ❼ | Master link (Left) |
| ❽ | Track bushing |
| ❾ | Track pin |
| ❿ | Master bushing |
| ⓫ | Master pin |
| ⓬ | Collar |
| ⓭ | Locking pin |

PREVIEW - YOUFIXTHIS.COM



Download full manual at youfixthis.com

## 1 Drive Sprocket

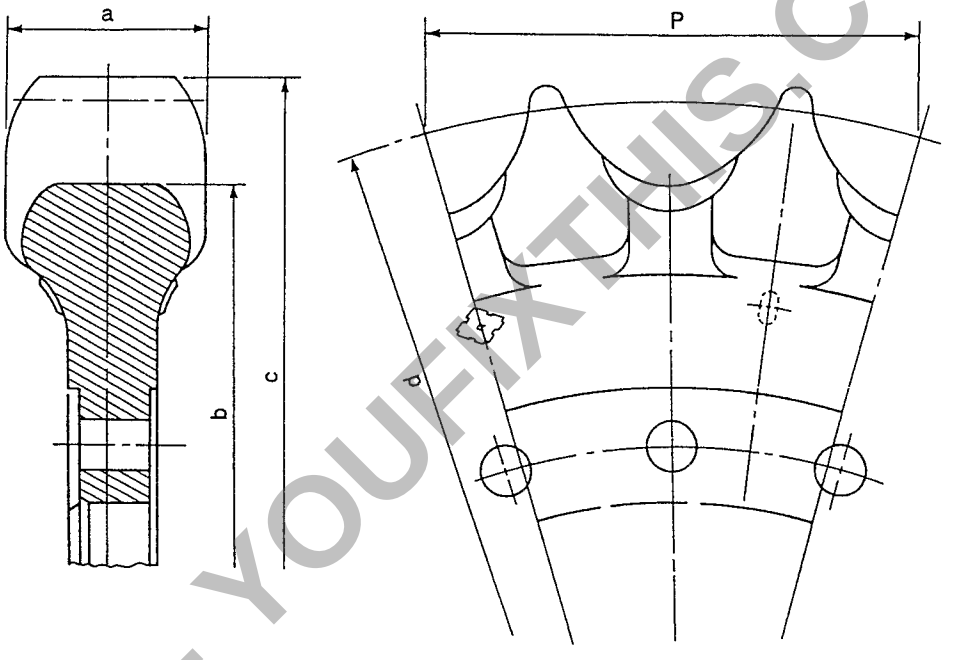


* Refer to Gauge Table for measurement gauges to be used
* Use Maintenance Standard Values Table for decisions

| Part name | Code | Measurement dimensions (inch) | Decision | Measure to be taken | Part name | Code | Measurement dimensions (inch) | Decision | Measure to be taken |
|---|---|---|---|---|---|---|---|---|---|
| Drive sprocket | a | | good • no good | Buildup or replace | | | | good • no good | Buildup or replace |
| | b | o | good • no good | | | | | good • no good | |
| | c | | good • no good | | | | | good • no good | |
| | d | o | good • no good | | | | | good • no good | |
| | P | | good • no good | | | | | good • no good | |
| | | | good • no good | | | | | good • no good | |



PREVIEW - YOUFIXTHIS.COM
Download full manual at youfixthis.com

PREVIEW - YOUFIXTHIS.COM

Download full manual at youfixthis.com

## 1. Specifications (Reference)

| Model | | 2800 | 3400 |
|---|---|---|---|
| Displacement | | 5 92 × 2 in³/rev (97 × 2 cm³/rev) | 5 89 × 2 in³/rev (96 5 × 2 cm³/rev) |
| Working pressure kgf/cm² | Set | 4549 6 psi (320 kgf/cm²) | 4549 6 psi (320 kgf/cm²) |
| | Maximum | 4976 1 psi (350 kgf/cm²) travel | 4976 1 psi (350 kgf/cm² ) travel |
| Speed | | 2070 min ⁻¹ | 2200 min ⁻¹ |
| Maximum flow | | 55 7 gpm (201 ℓ /min⁻¹) | 55 8 gpm (211 ℓ /min ⁻¹) |
| Minimum flow | | 13 2 gpm (50 ℓ /min⁻¹) | 13 2 gpm (50 ℓ /min⁻¹) |
| Input power | | 125 PS | 151 PS |
| Maximum input torque | | 313 9 ft lbs (43 4 kgf•m) | 355 2 ft lbs (49 1 kgf•m) |
| Hydraulic oil | Type | Wear resistant hydraulic oil | |
| | Temperature range | -4°F ~+194°F (-20 ℃ ~+95 ℃ ) | |
| | Viscosity | 10~1,000 cSt (mm²/s) | |
| | Recommended filter | Return line Nominal 10 μm | |
| | | Suction line 80~150 mesh | |
| Control function | | Summation horsepower control<br>Power shift control<br>Negative flow control<br>Qmax cut control | |
| Other | | With 0 61 in³/rev (10cc/rev ) gear pump<br>With electromagnetic reducing valve | |



PREVIEW - YOUFIXTHIS.COM

Download full manual at youfixthis.com

### 3-3 Development Elevation

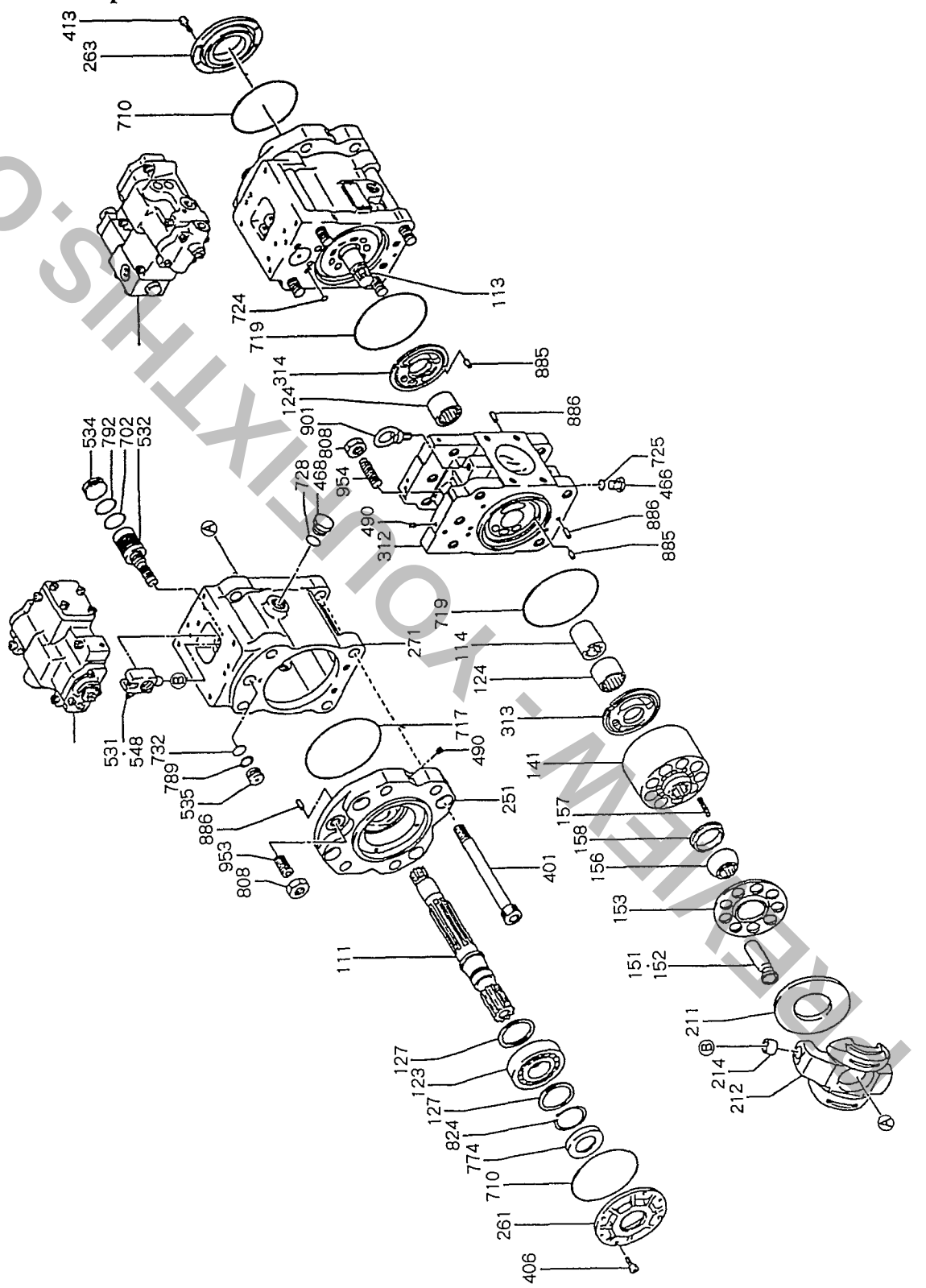




Download full manual at youfixthis.com

| No | Work Description | Precautions |
|---|---|---|
| 11 | Assemble the spring base (644), pilot spring (646) and adjustment ring (Q) (645) into the pilot hole and assemble the spring base (624), inner spring (626) and outer spring (625) into the compensator hole 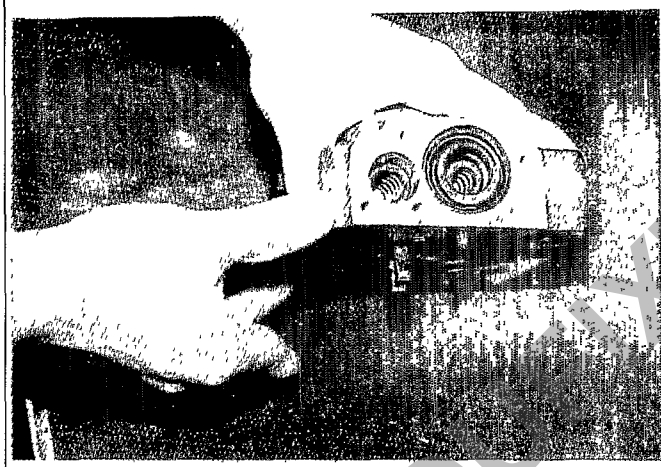 | (1) Do not mistake the spring base direction |
| 12 | Install the cover (C) (629) which has the adjustment screw (628) (925), adjustment ring (C) (627), lock nut (630), Hexagonal bolt (801) adjustment screw (924) set into it and tighten the hexagonal socket head bolt (438) This completes the reassembly 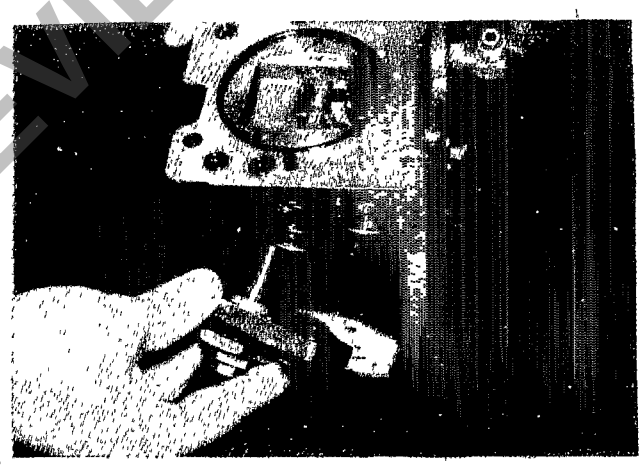 | |



PREVIEW - YOUFIXTHIS.COM

Download full manual at youfixthis.com

### 3-4. 2-Speed Mode Changer

#### (1) 2-Speed Mode Changer Structure

The swash plate has three surfaces, A through C as illustrated in Fig 9, being assembled in a slant state on the motor case with two steel balls

The 2-speed mode change valve is assembled inside the base plate

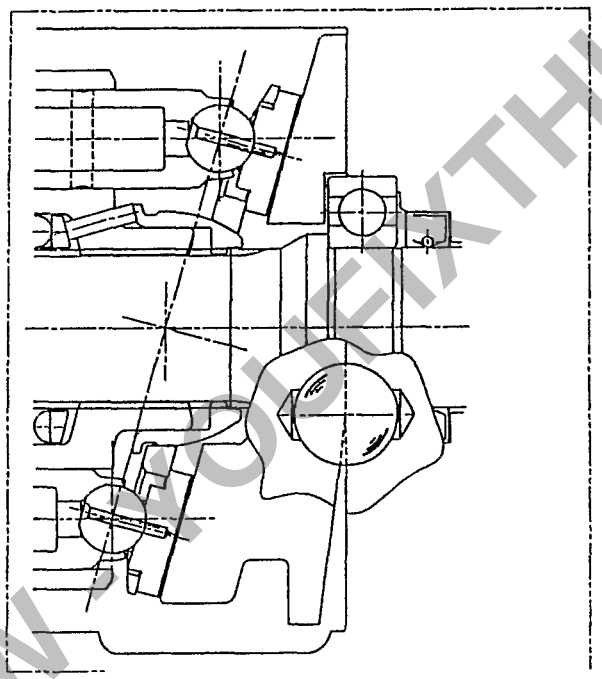

MS632764

Fig 9 2-Speed Mode Changer Structure

PREVIEW YOUFIXTHIS.COM



Download full manual at youfixthis.com

| Assembly procedure | Process Illustration |
|---|---|
| 4 Assemble the ball bearings (12) into the case (1) | 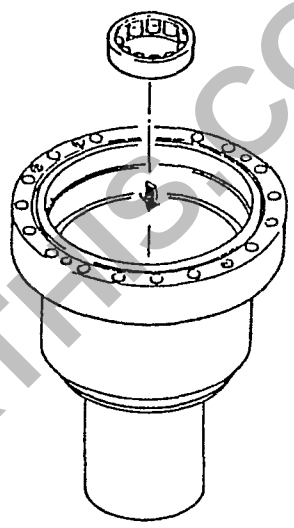 |
| 5 Assemble the steel balls (10), spring (40) and piston S/A (11) into the case (1) | 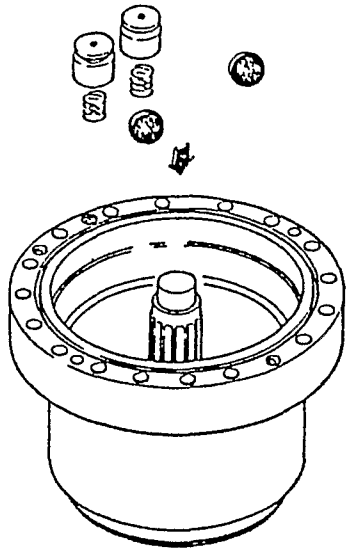 |

PREVIEW - YOUFIXTHIS.COM



Download full manual at youfixthis.com

| Assembly Procedures | Process Illustration |
|---|---|
| c) Align the spring pin hole of gear shaft C (3-4) to the spring pin hole of holder C (3-1) and insert the gear shaft C (3-4)<br><br>※ Verify that the planetary gear (3-2) rotates smoothly | 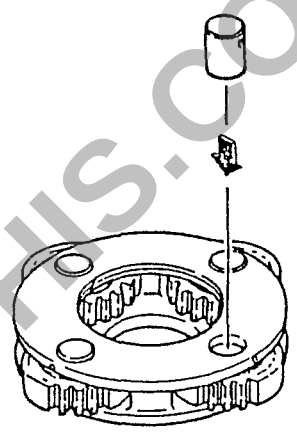 |
| d) Knock in the spring pin (3-8) until it sinks below the circumference of holder B (3-1), and stake four symmetrical positions | 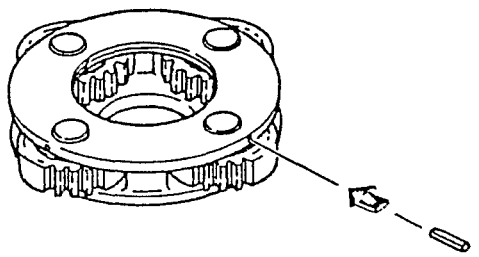 |



PREVIEW - YOUFIXTHIS.COM

Download full manual at youfixthis.com

## 3. Disassembly

(The numbers marked with ○ refer to those in the structure diagram on page 32 )

### 3-1 Removal of relief assembly

Remove the caps ㊲ with 14mm A/F hexagonal sockets and remove the relief assembly ㉞ from the motor



※ During reassembly, be sure to insert the relief assembly ㉞ into the original position The disassembly procedure for the relief assembly is given below

### 3-2 Removal of make-up, by-pass valve assemblies

Remove the caps ㉚ with the 14mm A/F hexagonal key and take out the springs ㉛ and checks ㉙ Remove the by-pass valve assembly ㉘ using 10mm A/F hexagonal key



※ Be sure to insert the parts into their original positions during reassembly.

### 3-3 Alignment marks for motor

It is advisable to make alignment marks on the cover ⑰ and housing ㉕ with white paint, etc to facilitate reassembly

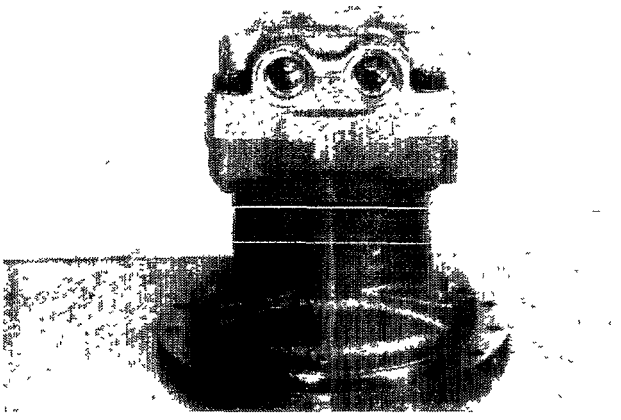



PREVIEW - YOUFIXTHIS.COM

Download full manual at youfixthis.com

## 2-6 Holder assembly mounting

### 2-6-1 2nd stage Holder assembly mounting

Insert the spur gear 5 ⑭ and thrust plate ⑮ into the holder 2 ⑰ and insert the shaft assembly 2 ⑫

※ Apply gear oil (refer to instruction manual) to the spur gear internal surface and shaft assembly outer surface



Drive in the spring pin ⑯

※ Drive in the pins with the splits facing towards the spur gears 5 ⑭



PREVIEW - YOUFIXTHIS.COM



Download full manual at youfixthis.com

Tighten the plate ㊶ with the bolt ㊵ (Hexagonal 14 A/F) which has the washer ㊳ to the valve housing which has the O-ring ㊳ installed

(Torque 28 9 ~ 32 6 ft lbs {39 ~ 44 N•m})

If the plug is disassembled, assemble with the following combinations

| Plug (Hexagonal A/F) No | O-ring No | Tightening Torque ft lbs {N•m} |
|---|---|---|
| ⑫ (22) | ⑬ | 36 2 ~ 43 4 ft lbs {49 ~ 59 N•m} |
| ㉞ (Hexagonal socket 6 A/F) | ㉝ | 25 3 ~ 28 9 ft lbs {34 ~ 39 N•m} |
| ㊼ (19) | ㉝ | 25 3 ~ 28 9 ft lbs {34 ~ 39 N•m} |
| ㊽ (Hexagonal socket 10 A/F) | ㊼ | 65 1 ~ 72 3 ft lbs {88 ~ 98 N•m} |
| ㊲ (31 5) Assembly replacement | | 57 9 ~ 65 1 ft lbs {78 ~ 88 N•m} |

When disassembling the plug ㉟ (Hexagonal socket 5 A/F), wrap seal tape around the plug periphery (leave open one thread from the end and wrap 1 5 ~ 2 times to the right so that the seal tape bites into the thread)

(Torque 5 1 ~ 6 5 ft lbs {6 85 ~ 8 82 N•m})

Recheck for parts not reassembled and tightening

When disassembling back side connected parts, attach the O-rings ⑱ ㊷ ㊶ ㊸ to the bottom of the 5-spool side valve and attach the 4-spool side and 5-spool side with socket head bolts ③

(Torque 123 0 ~ 130 2 ft lbs {170 ~ 180 N•m})

## 5-2) Assembly 2

Control Valve (R) 4-spool side control valve

(The numbers refer to those in the structure diagram of page 43, 44.)

Assemble the poppet ㉓ and spring ㉒ into the spool ③ After completely degreasing the threaded part (and the spool side) of the plug ⑲ (Hexagonal 22 A/F), which has the O-ring ㉑ and back up ring ⑳ attached, apply adhesive and install it into the spool

(Torque 7 2 ~ 8 7 ft lbs {9 8 ~ 12 N•m})

Assemble the spring seat ⑯ and spring ⑰ to the spool end ③ (Hexagonal 22 A/F) and apply adhesive to the threads and install it into the spool ④ ⑤ ⑥

(Torque 7 2 ~ 8 7 ft lbs {9 8 ~ 12 N•m})

Assemble the spool assembly into the valve housing ① at the same position and direction as before

Assemble the sleeve ㊵ which has the O-ring ㊶ and back up ring ㊷ attached and assemble the poppet ㊴, spring ㊳, spacer assembly ㊺ and attach the O-ring ㊲ and back up ring ㊱ to the plug ㉟ and assemble into the valve housing

Assemble the spool ⑦ into the valve housing and install the spring seat ⑨ and spring ⑧

Tighten the caps ② ⑭ which have O-rings ⑩ ⑱ attached, with socket head bolts ㊼ ㊽ (Hexagonal socket 8 A/F) to the valve housing



PREVIEW - YOUFIXTHIS.COM

Download full manual at youfixthis.com

PREVIEW - YOUFIXTHIS.COM

Download full manual at youfixthis.com

## 7-3 Disassembly Procedures

1) Preparation

(1) Prepare a work bench large enough to accommodate the parts and which is hard and stable

(2) Prepare the necessary tools

2) Cautions during Disassembly

(1) All the parts of this valve are manufactured to high precision Take care not to bump parts together or to drop them

(2) During assembly, do not hit or force stiff parts This may cause burring or damage to the parts, causing sticking and oil leakage and lead to lower performance Carry out all work on the valve carefully and patiently

(3) Parts may rust due to humidity and dirt if they are left for a length of time in a disassembled or semi-disassembled state Protect the parts from rusting and dust if it is necessary to interrupt work on the valve

3) Disassembly Procedure

| No | Work | Cautions |
|---|---|---|
| | 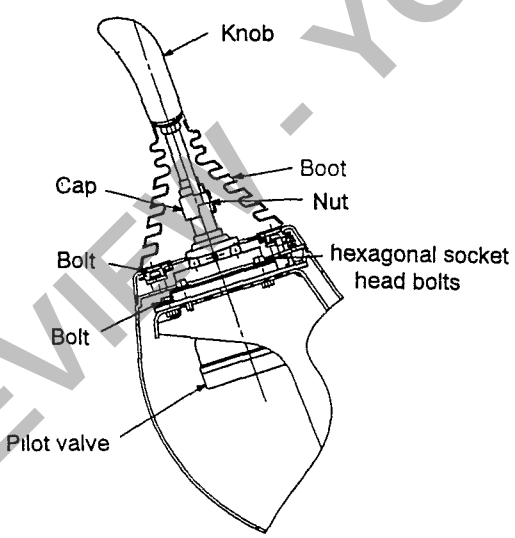 | |
| 1 | Remove knob from pilot valve | Be careful of the wiring when removing |
| 2 | Remove the boot (cover) from the pilot valve | |
| 3 | Remove the lines (Attach tags to the connecting ends of the lines to facilitate reassembly ) | |



PREVIEW - YOUFIXTHIS.COM

Download full manual at youfixthis.com

Control No

| | | |

# PREVIEW ONLY

You're viewing 25 of 716 pages

## The full manual includes:

- All 716 pages, complete
- Searchable PDF (find any keyword)
- No watermarks
- Instant download
- Print-ready quality

**GET FULL MANUAL NOW**

**Link-belt 2800, 3400 Shop Manual**

**Scan or click anywhere**
**youfixthis.com**

*Click anywhere on this page to get the full manual*