Overall

1. Main Data

Model name	290X2
Operating weight	65698 lb (29800kg)

PREVIEW - YOUFIXTHIS.COM

Blurred on purpose. The manual you buy has this page in full quality.

Download full manual at youfixthis.com

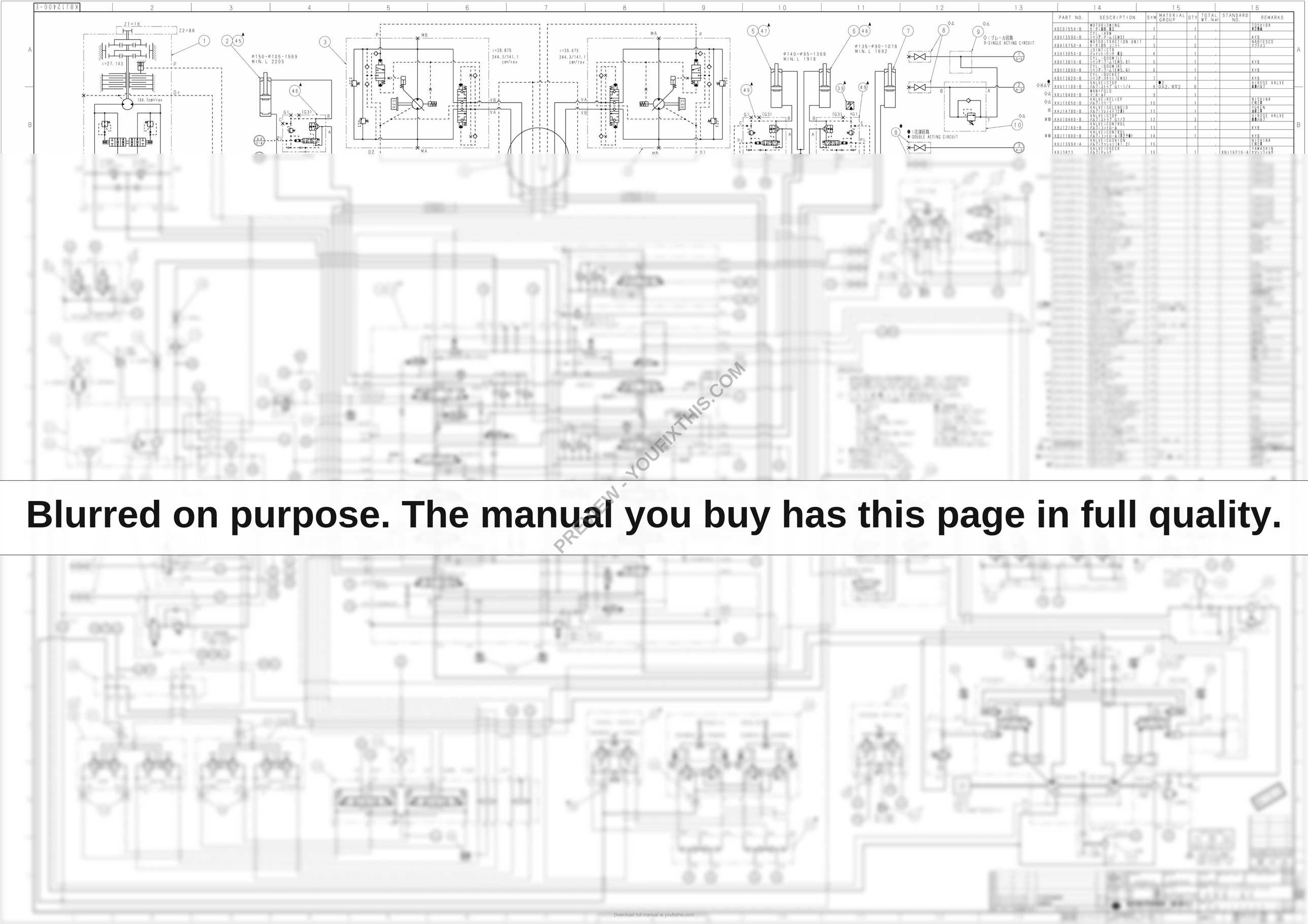

PREVIEW - YOUFIXTHIS.COM

Blurred on purpose. The manual you buy has this page in full quality.

Download full manual at youfixthis.com

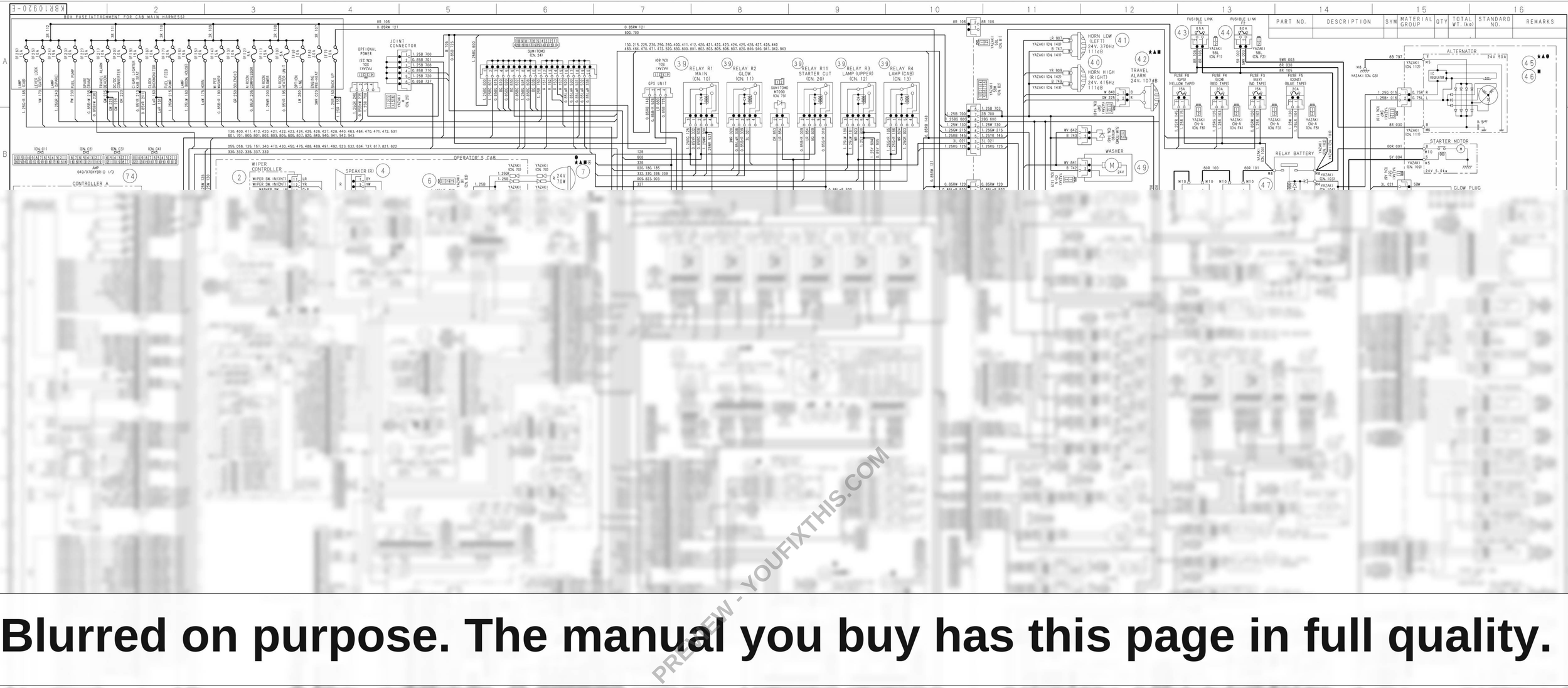

Blurred on purpose. The manual you buy has this page in full quality.

PREVIEW - YOUFIXTHIS.COM

Download full manual at youfixthis.com

Boom Circuits

5. Boom-Down Load Hold Valve Circuit

When the remote control valve boom operation lever is in neutral, the oil at the boom cylinder bottom side is sealed by the load hold valve check valve, reducing internal leakage from the main spool and reducing the natural drop of the boom.

By moving the remote control valve to the boom-down side, the pilot pressure oil is fed via the cushion valve to the control valve Pb8 port and switches the boom spool to the down side.

The discharge oil from hydraulic pump A2 enters the control valve P2 port and is fed from the parallel oil path to the boom (1). Switching the spool lets the oil flow into the boom cylinder bottom side and carries out the boom-down operation.

The pilot pressure oil from the Pb8 port separated in the internal path is fed to the load hold valve spool and moves the spool to the left. In this way, the load hold valve check valve spring chamber oil is connected to the tank line through the load hold valve spool, the spring chamber pressure drops, and the load hold valve check valve is opened.

The boom cylinder bottom side pressurized oil goes through the load hold valve check valve and the boom (1) spool and returns to the hydraulic oil tank.

1	Boom load hold valve check valve	12	Oil cooler
2	Load hold valve spool	13	Boom cylinder
3	Cushion valve	14	Boom (1)
4	Boom (up)	15	Travel pilot pressure sensor
5	Boom (down)	16	Upper pilot pressure sensor
6	Remote control valve (boom, bucket)	17	Console lever lock switch
7	Lever lock	18	Monitor display
8	Boost relief	19	Computer
9	5 stack solenoid valve	20	P1 pressure sensor
10	Control valve	21	P2 pressure sensor
11	Check valve	22	Hydraulic pump

PREVIEW - YOUFIXTHIS.COM

Download full manual at youfixthis.com

Arm Circuits

Arm-In Forced Regenerative Circuit

Pressure line
Tank line

370 PSI (2.55 MPa) at 13 Gal. (50 L)/min
2988 PSI (20.6 MPa) at 18 Gal. (67 L)/min

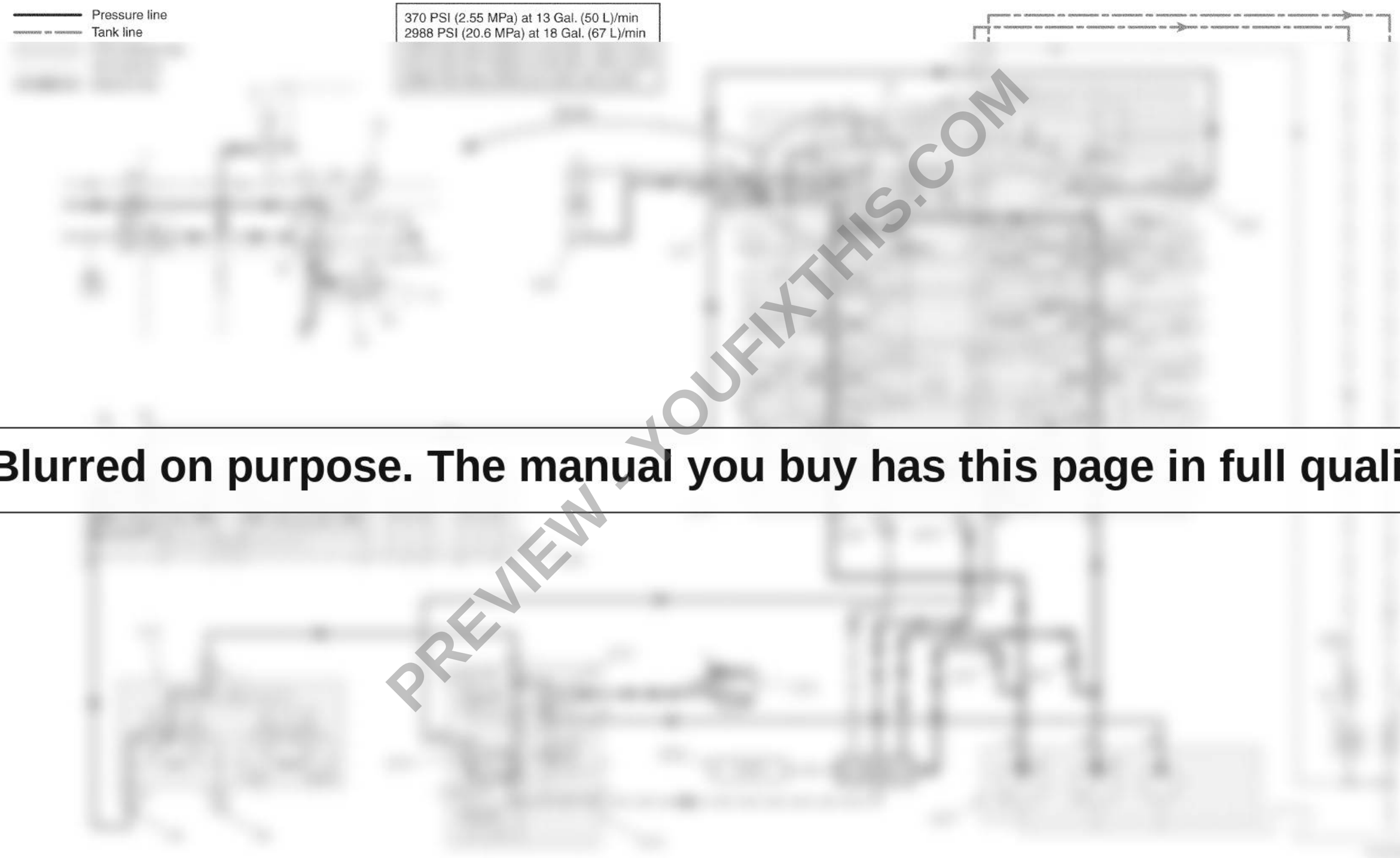

PREVIEW - YOUFIXTHIS.COM

Blurred on purpose. The manual you buy has this page in full quality.

Download full manual at youfixthis.com

This page left intentionally blank

PREVIEW - YOUFIXTHIS.COM

Download full manual at youfixthis.com

2. Muffler

	290X2
SUMITOMO Part No.	KSH0948
Manufacturer	SANKEI GIKEN KOGYO CO., LTD
Model	ϕ 74.8 x 206.1 Gal. (283.2 x 780 L)
Weight	44.1 lb. (20.0 kg)

3. Air Cleaner (double element)

	290X2
SUMITOMO Part No.	KSH0895
Manufacturer	Nippon Donaldson, Ltd
Element (outer)	KSH0933
Element (inner)	KSH0932
Weight	30.0 lb. (13.6 kg)

4. Radiator

		290X2
SUMITOMO Part No.		KBH10290
Manufacturer		T.RAD Co., Ltd
Oil cooler	Weight	57.3 lb. (26 kg)
	Oil capacity	3.7 Gal. (14.0 L)
Radiator	Weight	42.8 lb. (19.4 kg)
	Coolant capacity	2.2 Gal. (8.5 L)
Air cooler	Weight	41.2 lb. (18.7 kg)
	Capacity	-
Fuel cooler	Weight	2.6 lb. (1.2 kg)
	Capacity	0.12 Gal. (0.44 L)
Total weight		284.4 Gal. (129.0 kg)

PREVIEW - YOUFIXTHIS.COM

Download full manual at youfixthis.com

Pilot Control Line (2-way selector valve)

PARTS NAME	SYMBOL	QTY
HOSE;ASSY	1	1
HOSE;ASSY	2	1
HOSE;ASSY	3	1
HOSE;ASSY	4	1
HOSE;ASSY	5	1
HOSE;HYD	6	1
HOSE;NYLON	7	1
HOSE;NYLON	8	1
VALVE;CUSHION (ϕ1.2)	9	1
TUBE;ASSY	10	1
TUBE;ASSY	11	1
TUBE;ASSY	12	1
TUBE;ASSY	13	1

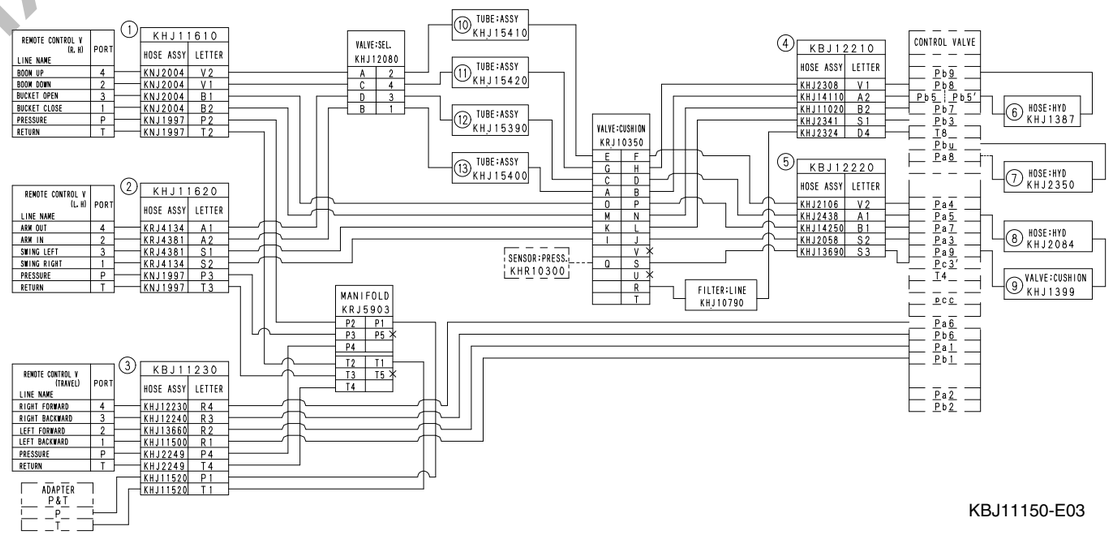

KBJ11150-E03

PREVIEW - YOUFIXTHIS.COM

Download full manual at youfixthis.com

Arm Circuits

2. Arm-In Forced Regenerative Circuit

By moving the remote control valve to the arm-in side, the pilot pressure oil is fed via the cushion valve to the control valve Pb5 port and Pb9 port and switches the arm (1) and (2) spools to the in side.

The discharge oil from hydraulic pump A1 enters the control valve P1 port and is fed from the center bypass oil path to the arm (1) spool. The discharge oil from hydraulic pump A2 enters the control valve P2 port, flows from the center bypass oil path and through the arm (2) spool front arm merge oil path and merges upstream of the arm (1) spool.

Switching the arm spool lets the oil flow into the arm cylinder bottom side and carries out the arm-in operation.

The pilot pressure oil from the Pb5 port separated in the internal path is fed to the load hold valve spool and moves the spool to the right. In this way, the load hold valve check valve spring chamber oil is connected to the tank line through the load hold valve spool, the spring chamber pressure drops, and the load hold valve check valve is opened.

The arm cylinder rod side pressurized oil goes through the load hold valve check valve and the arm (1) spool and is metered by the forced regeneration release valve. Through this, the return oil pushes open the check valve in the arm (1) spool and is forcibly regenerated on the cylinder bottom side, securing the arm speed for leveling work etc. When the cylinder bottom load pressure becomes high, the forced regeneration release valve is switched to the large metering side and the opening becomes larger. Through this, the check valve in the spool is closed and the cylinder rod side return oil returns to the hydraulic oil tank via the arm spool (1) and forced regeneration release valve without being regenerated.

1	Load hold valve spool	11	Remote control valve (arm, swing)	21	Console lever lock switch
2	Load hold valve check valve	12	Lever lock	22	Monitor display
3	Oil cooler	13	Boost relief	23	Power up
4	Regeneration check	14	5 stack solenoid valve	24	Computer
5	Metering large	15	Control valve	25	P1 pressure sensor
6	Metering small	16	Arm cylinder	26	P2 pressure sensor
7	Forced regeneration release valve	17	Arm (1)	27	Hydraulic pump
8	Arm (in)	18	Arm (2)	28	Check valve
9	Arm (out)	19	Travel pilot pressure sensor		
10	Cushion valve	20	Upper pilot pressure sensor		

PREVIEW - YOUFIXTHIS.COM

Download full manual at youfixthis.com

2. Regulator

(1) Regulator operation explanation

[1] Flow control

- Operation explanation (See the Regulator operation explanation diagram.)

1) Flow control

The pump discharge flow is controlled as desired with the pilot pressure Pi as in the figure below.

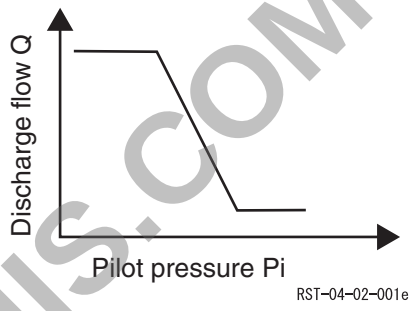

1. Flow reduction operation

When the pilot pressure Pi increases, the pilot piston (643) moves to the right and stops at the location where the pilot spring (646) force and hydraulic pressure force balance each other. The pin (875) fixed to lever 2 (613) fits into the crimped groove section of the pilot piston (643), so lever 2 rotates with the B section (fastened by the fulcrum plug (614) and pin (876)) as the support point. The pin (897) fixed to the feedback lever (611) projects into the large opening (C section) of lever 2 (613), so as lever 2 (613) rotates, the pin (897) moves to the right. The pin (548) fixed to the tilting pin (531) that moves the swash plate (212) fits with the feedback lever (611) two-side width section (D section), so the feedback lever (611) is rotated by the movement of the pin (897) with the section D as the support point. Since the spool (652) is linked to the feedback lever (611) via the pin (874), the spool (652) moves to the right.

When the spool (652) moves, the discharge pressure P1 is led to the servo piston large-bore chamber via the spool and CI port. The discharge pressure P1 is always led to the servo piston small-bore chamber. As a result, the servo piston is moved to the right due to the surface area difference and reduces the flow.

When the servo piston (532) moves to the right, the D section also moves to the right. The return spring (654) is mounted on the spool (652). Since force pulling the spool to the left is always operating, the pin (897) is pressed into the large opening (C section) of lever 2 (613). Because of this, accompanying the D section movement, the feedback lever (611) rotates around the C section as the support point and the spool (652) moves to the left. Through this movement, the opening between the sleeve (651) and spool (652) gradually starts to open. At the location where it is completely closed, the servo piston (532) stops.

2. Flow increase operation

When the pilot pressure Pi decreases, the pilot piston (643) is moved to the left by the pilot spring (646) force and lever 2 (613) rotates with the B section as the support point. The pin (897) is pressed in the large opening (C section) of lever 2 (613) by the return spring (654) via the spool (652), pin (874), and feedback lever (611), so accompanying rotation of lever 2 (613), the feedback lever (611) rotates with the D section as the support point and the spool (652) moves to the left.

When the spool (652) moves, the CI port opens to the tank port, so the pressure in the large-bore chamber of the servo piston drains out, the servo piston (532) is moved to the left by the discharge pressure P1 of the small-bore section and the flow increases.

Accompanying the movement of the servo piston (532), the D section moves to the left, the feedback lever (611) rotates with the C section as the support point and the spool (652) moves to the right. This operation continues until the opening between the spool (652) and sleeve (651) and closes and stops at the location where the opening is completely closed.

PREVIEW - YOUFIXTHIS.COM

Download full manual at youfixthis.com

8) Relief valve

1. Main relief valve [Fig. 17]
   The oil fed from the P1 port passes through the poppet (LP) and the oil fed from the P2 port passes through the poppet (RP) and path (3) and is led to the main relief valve. The maximum pressure of the P1 and P2 pumps is controlled by the operation of the main relief valve.

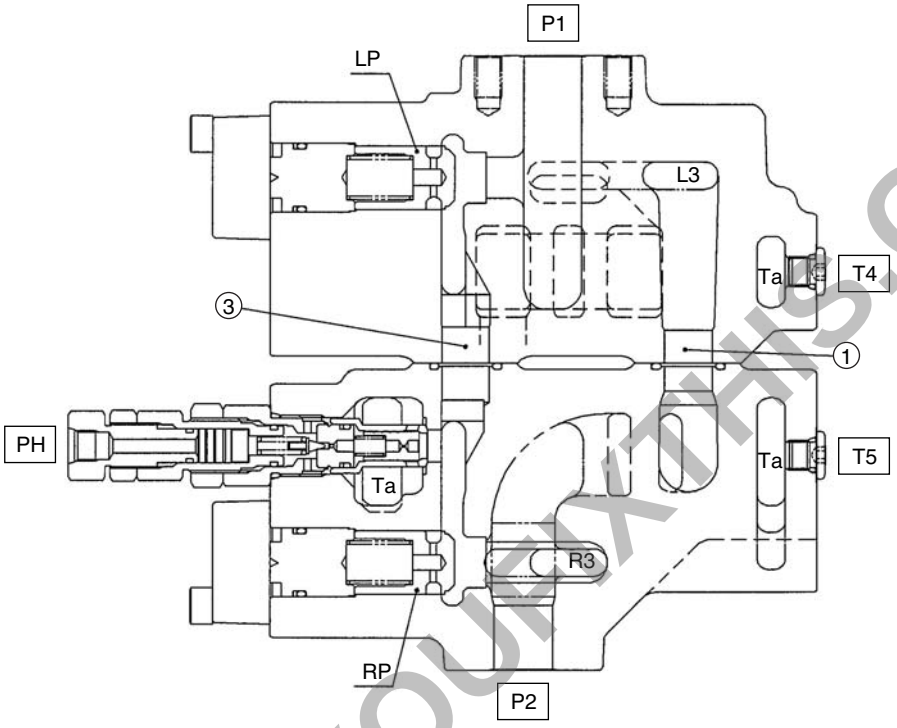

[Fig.17]

RST-04-02-001bb

2. Overload relief valve [Fig. 18]
   There is an overload relief valve at the boom 1, arm 1, bucket, and add-on cylinder ports to prevent any abnormal rise in actuator pressure, for example due to an external force.
   This relief valve is also equipped with a function for preventing cavitation (suction function) by taking in oil from the tank when there is a load on the cylinder port pressure.

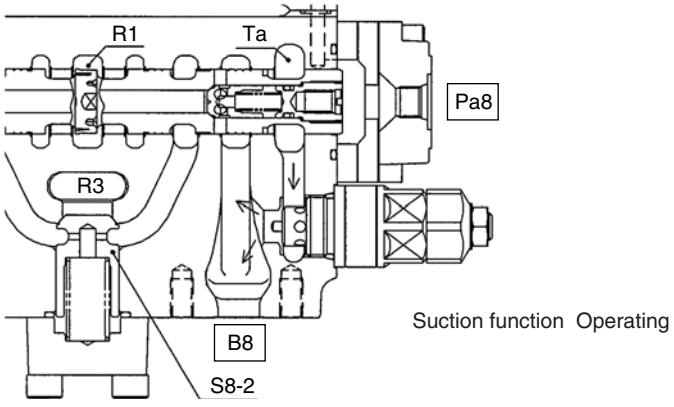

[Fig.18]

RST-04-02-001cb

PREVIEW - YOUFIXTHIS.COM

Download full manual at youfixthis.com

Explanation of New Functions

Pilot Pressure Switch Changed to Pressure Sensor

No.	LX	X2	Change details
1	Upper pressure switch	Upper pressure sensor	Switch to sensor
2	Travel pressure switch	Travel pressure sensor	Switch to sensor
3	Swing pressure switch	Swing pressure sensor	Switch to sensor
4	None	Arm-in pressure sensor	New
5	P1 pressure sensor	P1 pressure sensor	Parts change (not compatible with LX)
6	P2 pressure sensor	P2 pressure sensor	Parts change (not compatible with LX)
7	N1 pressure sensor	N1 pressure sensor	Parts change (not compatible with LX)
8	None	N2 pressure sensor	New
9	Option pressure switch	Option pressure switch	No change

[1] Configuration
Pilot pressure sensor and switch sensing point

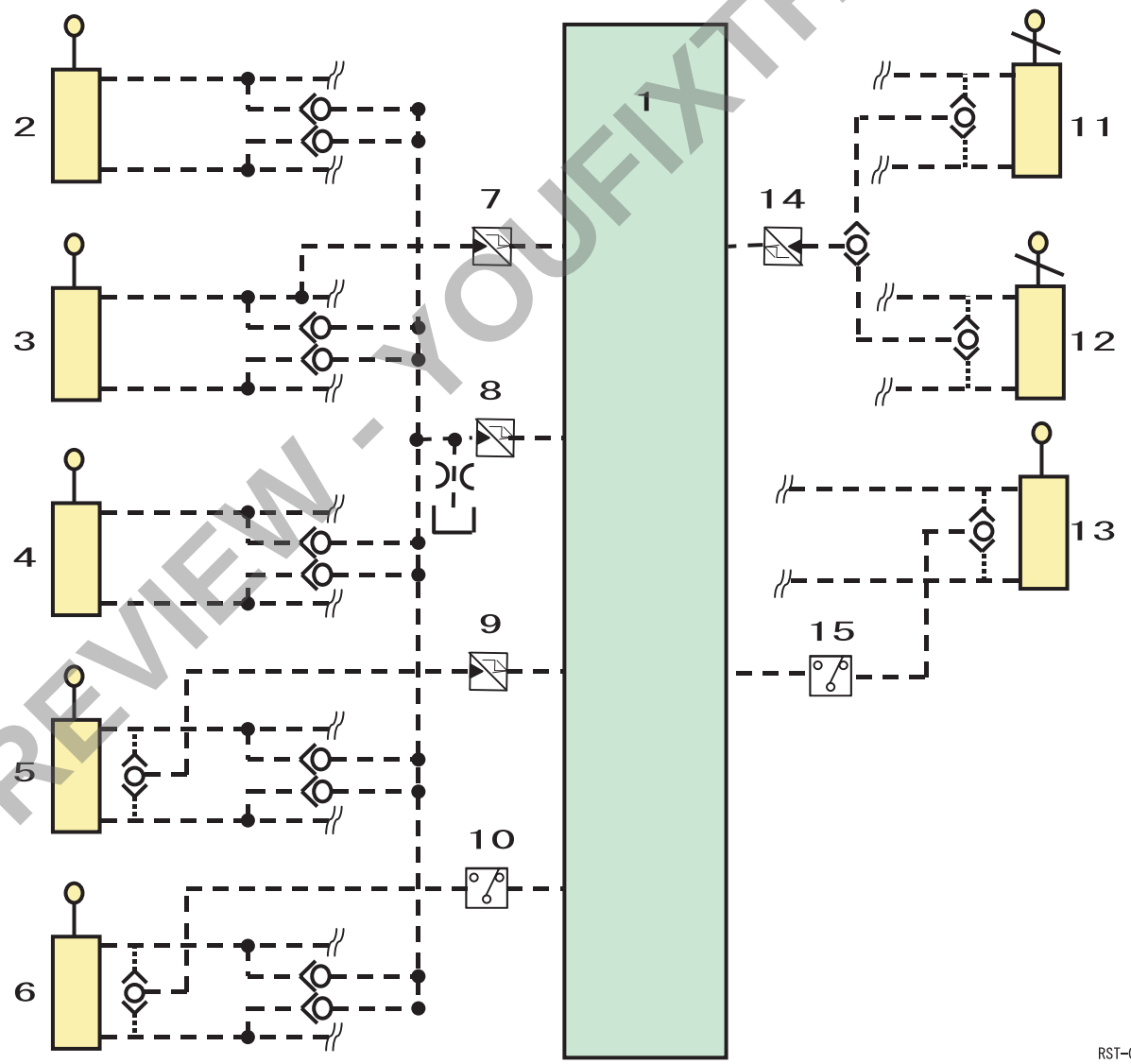

1	Computer	6	1st option lever	11	Travel (left) lever
2	Bucket lever	7	Arm-in pressure sensor	12	Travel (right) lever
3	Arm lever	8	Upper pressure sensor	13	2nd option lever
4	Boom lever	9	Swing pressure sensor	14	Travel pressure sensor
5	Swing lever	10	1st option pressure switch	15	2nd option pressure switch

PREVIEW - YOUFIXTHIS.COM

Download full manual at youfixthis.com

3. ECM

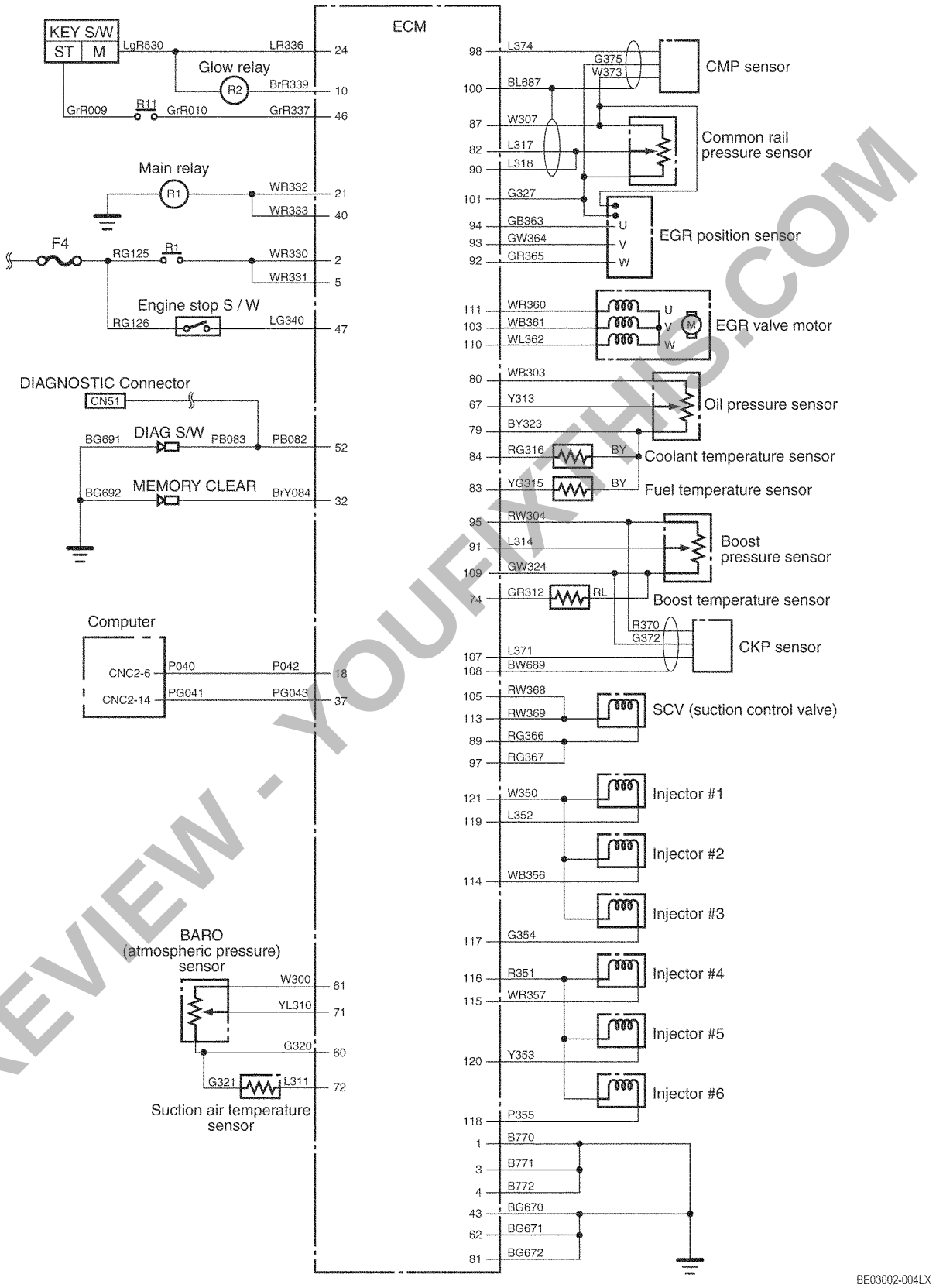

PREVIEW - YOUFIXTHIS.COM

Download full manual at youfixthis.com

[5] Time chart

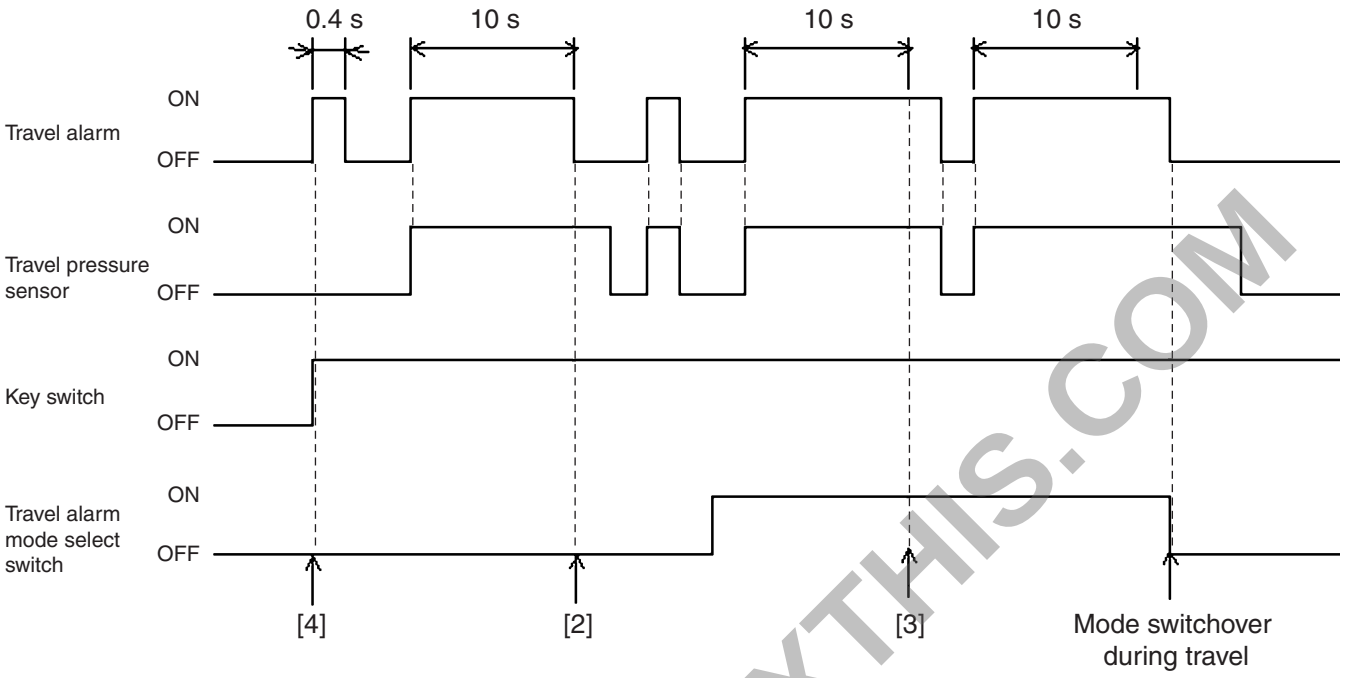

RST-05-06-001ae

[6] Trouble mode

If trouble occurs in the travel pressure sensor, the machine goes into trouble mode and the travel alarm is always OFF.

PREVIEW - YOUFIXTHIS.COM

Download full manual at youfixthis.com

H/W-A

[1] Digital input/output

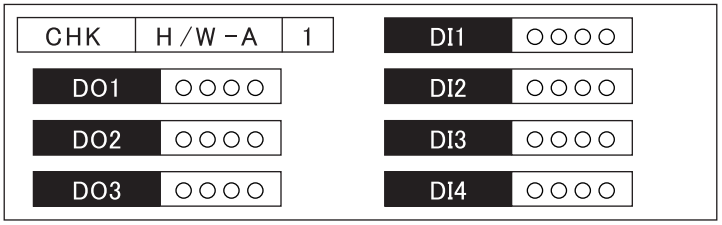

Input/output state (○ = OFF, ● = ON)

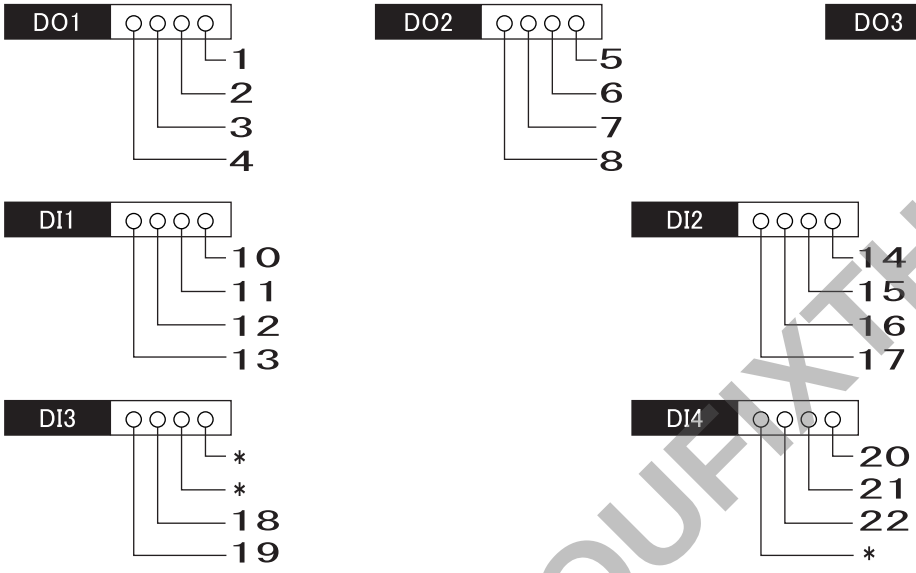

1	Solenoid; Power save	9	Relay; Feed pump	17	Switch; Pressure (Option)
2	Solenoid; Boost	10	Switch; Clog (Air cleaner)	18	Switch; Fan reverse
3	Solenoid; Travel high-speed switchover	11	Switch; Level (Coolant)	19	Switch; Clog (Return filter)
4	Solenoid; Swing brake	12	Switch; Anti-theft	20	Alternator
5	Buzzer; Travel alarm	13	Switch; One-touch idle	21	Switch; Engine emergency stop
6	Solenoid; Option line switchover	14	Switch; Travel alarm/overload	22	Switch; Key
7	Solenoid; Free swing	15	Switch; Free swing		
8	Solenoid; Fan reverse	16	Switch; Pressure (2nd option)		

PREVIEW - YOUFIXTHIS.COM

Download full manual at youfixthis.com

Trouble contents	Diagnostic trouble code	Main symptoms when trouble occurs	Diagnostic trouble code display conditions	Back-up function	Conceivable cause	Patterns for recovery from trouble
Faulty CPU monitoring IC	0606	Drop of output power	The RUN-SUB pulse (signal between CPU and SUB-CPU) was unchanging for 20 ms or longer.	Injection quantity restriction	ECM internal defect	2
Faulty charge circuit 1	0611	Engine vibration, idling instability, drop of output power Possibility of rev-up defect, engine stalling	When the ECU charge circuit bank 1 voltage is low for 1.5s or longer	Common 1 stop (No. 1, 4 cylinder stop) EGR stop	ECM terminal, ECM ground terminal defect (disconnection, high resistance) ECM internal defect	2
Faulty charge circuit 2	0612	Engine vibration, idling instability, drop of output power Possibility of rev-up defect, engine stalling	When the ECU charge circuit bank 2 voltage is low for 1.5s or longer	Common 2 stop (No. 2, 3 cylinder stop) EGR stop	ECM terminal, ECM ground terminal defect (disconnection, high resistance) ECM internal defect	2
Pressure limiter open	1095	Drop of output power, hunting	When the pressure limiter is open or when the common rail pressure exceeds 200 MPa for 1s or longer	Injection quantity restriction	Fuel system pipe (hose), etc. blocked Air in fuel system (Check hose connection.) Pressure limiter defect Common rail pressure sensor defect Wiring defect (short) between ECM and common rail pressure sensor Supply pump defect ECM internal defect	1

Note:

[1] Patterns for recovery from trouble
There are the following two ways to recover from trouble.
Because the error code is cleared according to conditions, the following main switch operations are required.
Type 1:When the key is switched ON, the engine is started and held for 10 seconds, then the key is switched OFF, the display is recovered to normal.
Type 2:When the key is switched ON and held for 10 seconds, then the key is switched OFF, the display is recovered to normal.
However, for temperature sensors in the section marked *, after the key is switched ON, it is held for 3 to 10 minutes before it is switched OFF.

PREVIEW - YOUFIXTHIS.COM

Download full manual at youfixthis.com

If there is engine trouble, it is strictly prohibited to judge individual cylinders as OK or NG by starting up the engine and loosening the injection pipes. (Never do this. The high-pressure fuel sprays out dangerously.)

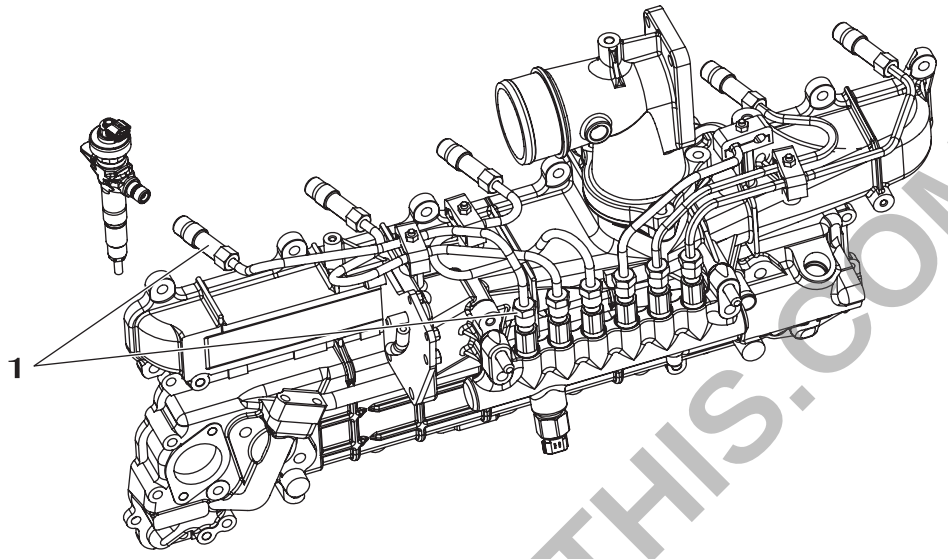

BF04003–007

1	Loosening when engine starts strictly prohibited

Be careful. High voltage of 118 V or higher is applied to the injectors. Disconnect the battery cable ground before replacing injectors.

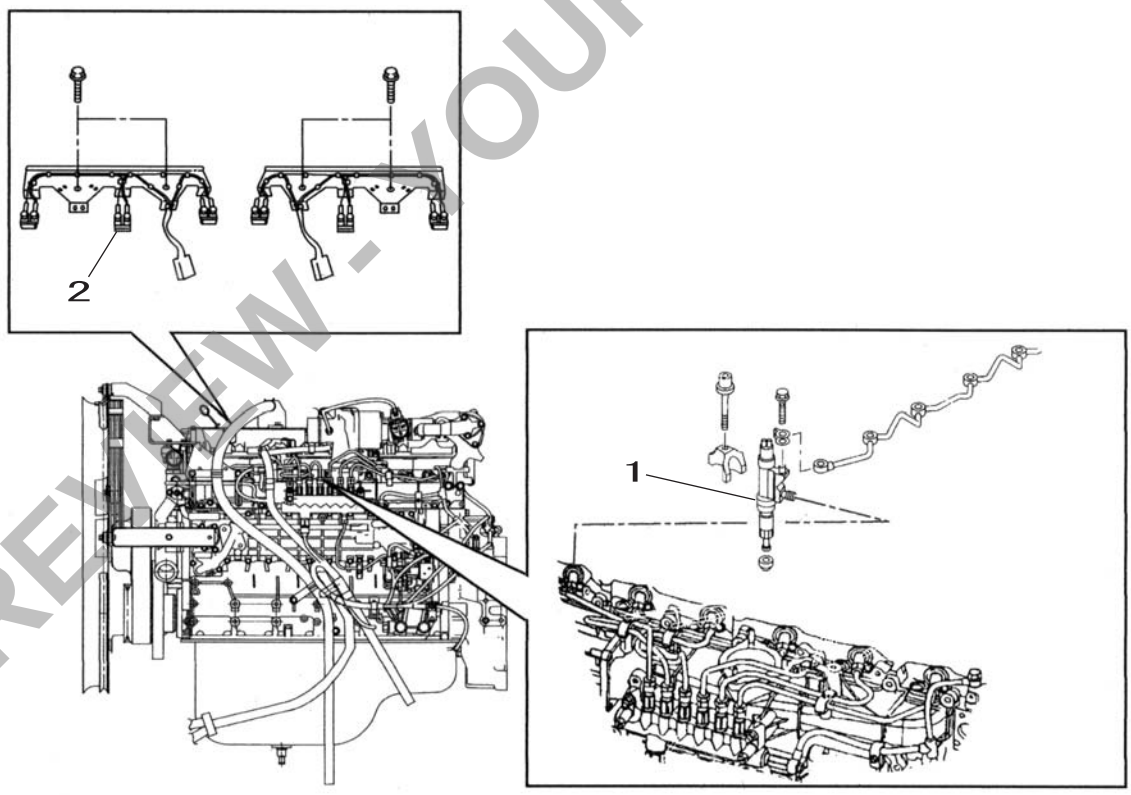

BF04003–008

1	Injector
2	Injector harness

PREVIEW - YOUFIXTHIS.COM

Download full manual at youfixthis.com

This page left intentionally blank

PREVIEW - YOUFIXTHIS.COM

Download full manual at youfixthis.com

(3) Swing relief pressure adjustment

Engine speed	1800 min^{-1}
Work mode	SP mode
Oil temperature	113 to 131 ºF (45 to 55ºC)
Measuring port	P1 port
Measurement pressure	4264 PSI (29.4 MPa)
Pressure per rotation of adjusting screw	696.2 PSI (4.8 MPa)/ rotation

Swing pressure

[1] Using the swing pressure measurement procedure for reference, lock the swing, and check the swing pressure.

[2] Loosen the lock nut and adjust by the turning the adjusting screw.
- When lower than the set pressure, tighten.
- When higher than the set pressure, first loosen to a pressure lower than the set pressure, then adjust on the tightening side.

[3] After adjustment, lock the lock nut.

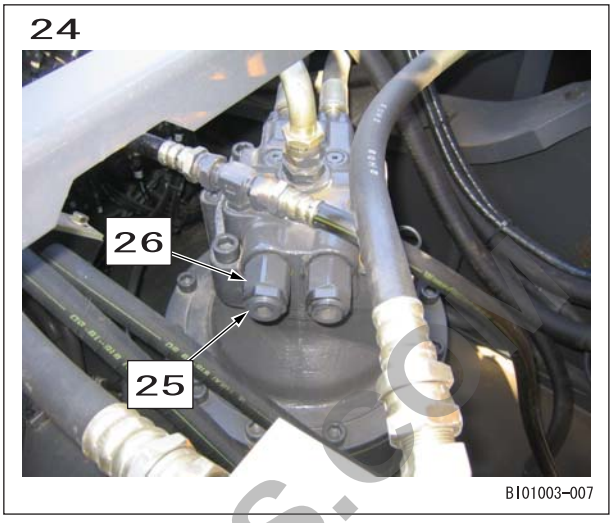

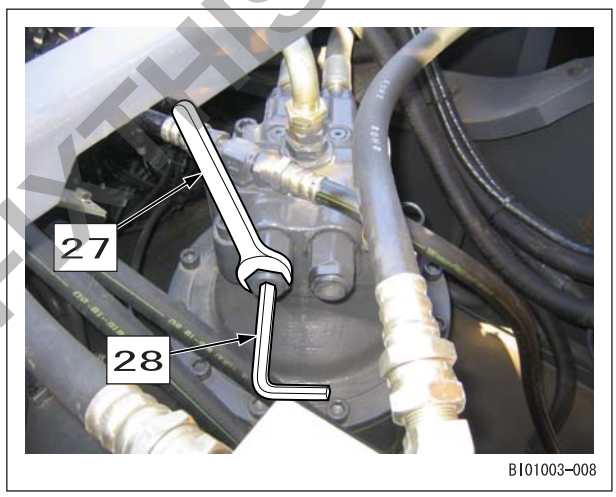

2. Pilot Pressure Adjustment

(1) Pressure measurement

a) Install the pressure gauge.

b) While holding the plug with a wrench (24 mm), adjust with a hexagon wrench (6 mm).

Engine speed	1800 min^{-1}
Lever operation	Neutral
Measuring port	P3
Set pressure	565.6 PSI (3.9 MPa)

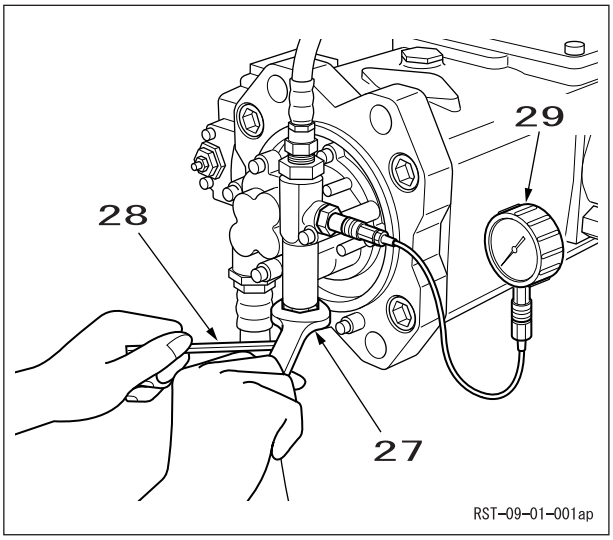

24	Swing relief
25	Adjusting screw Wrench size (24 mm)
26	Lock nut Wrench size (32 mm)
27	Wrench
28	Hexagon wrench
29	Pressure gauge

PREVIEW - YOUFIXTHIS.COM

Download full manual at youfixthis.com

Bolt and Nut Tightening

- Tighten alternating between left and right and top and bottom so that uniform tightening force is applied.

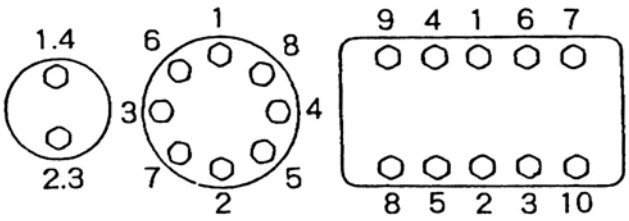

- For bolts at critical locations, apply engine oil to the threads for a uniform tightening force without catching on the thread peaks.
- For bolts and nuts at critical locations and at locations that cannot be inspected from the outside, use wire, cotter pins, folded washers, or the like to securely prevent turning.

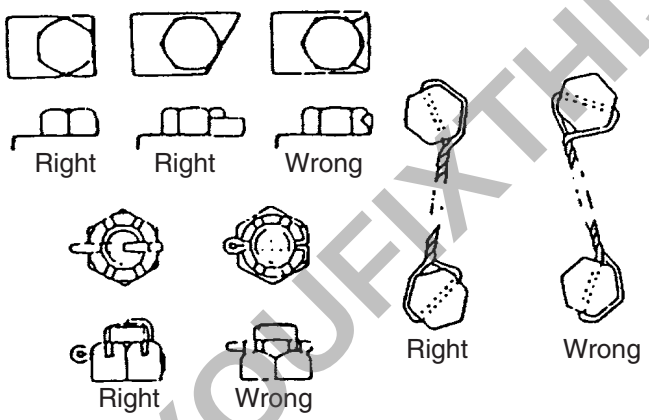

- If Locktite was used on a removed bolt (there is something white sticking to the bolt when it is removed), clean the old Locktite off with cleaning fluid, dry the bolt, then apply 2 to 3 drops of Locktite to the thread section of the bolt.

Bolt and nut retightening [after 1st 50 hours for new machine][every 250 hours]

Tighten and retighten bolts and nuts in each section according to the table. Also before and after day-to-day work, inspect for loose or fallen out bolts and nuts. Retighten any that are loose and replace any that have come out.
Inspect and retighten after the first 50 hours for a new machine and every 250 hours after that.

I

PREVIEW - YOUFIXTHIS.COM

Download full manual at youfixthis.com

2) Accelerating operation (refer to Fig. 11)
When VA and VB ports are connected respectively to pump and tank by operating the control valve, hydraulic oil from pump is forwarded through VA port to push open the check valve provided inside spool (26), and oil flows to motor via MA port to rotate the motor.

Therefore, the pressure increases and negative brake is released by the pressure supplied from pump. At the same time, the pressure of pilot chamber increases to push and move the spool (26) leftwards, overcoming the spring (28) force. Thus, the return line from MB to VB opens to rotate the motor.

In case inertia load is too big to start rotation, accelerating pressure reaches the set pressure of relief valve and high pressure oil is being relieved while the motor gains the rotational speed.
As the rotational speed goes up, the relieved volume decreases, and finally the motor rotates at a fixed speed.

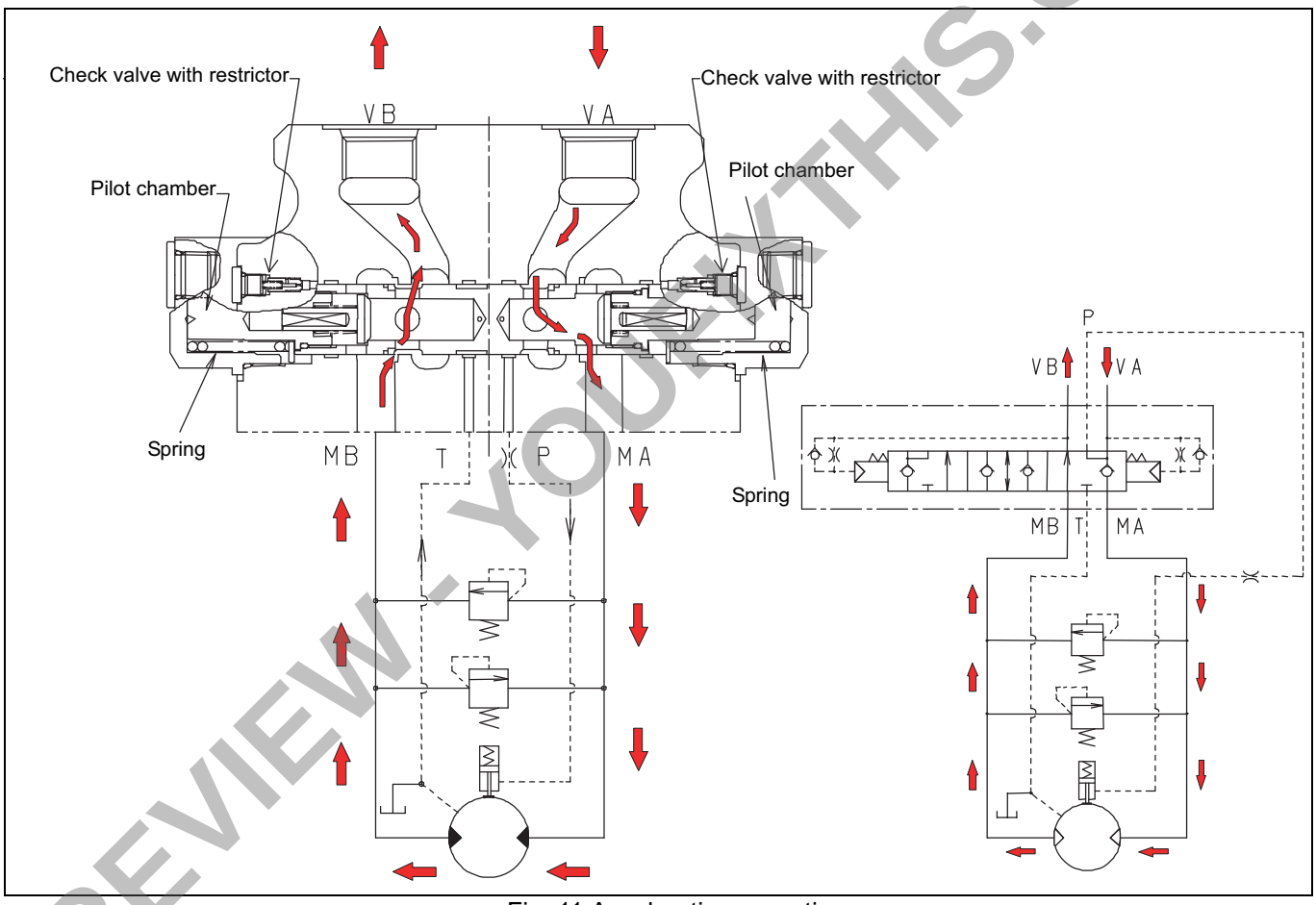

Fig. 11 Accelerating operation

PREVIEW - YOUFIXTHIS.COM

Download full manual at youfixthis.com

4) Calk carrier 2 (9) on diagonally position to prevent spring pin 10 × 56 (14) from coming out.

Note	Refer to Fig. 18 "Detail of calking".

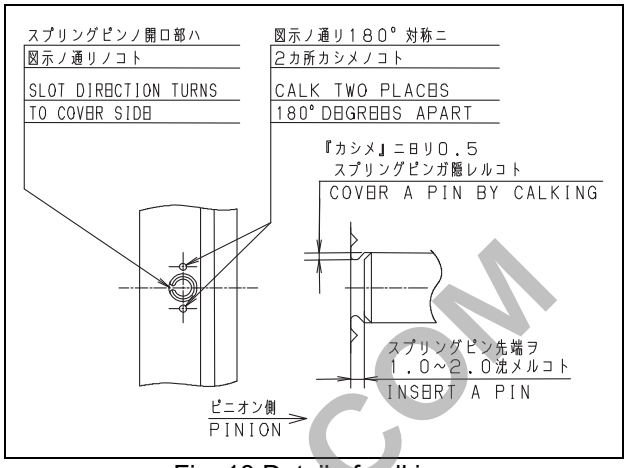

Fig. 18 Detail of calking

(2) Assembling carrier 1 ass'y

1) Install planetary gears 1 (17), needle bearings (19) and thrust washers 1 (18) into carrier 1 (16).

Caution	Take great care not to pinch your hand between gears and carrier 1 (16) while assembling.

2) Install carrier pins 1 (20) into carrier 1 (16) where the holes for spring pins are to be in line with those of carrier 1 (16).

3) Install spring pins 6 × 36 (21) into carrier 1 (16) and at the same time into carrier pins 1 (20).
(Sink spring pins of 1 - 2 mm from surface)

4) Calk carrier 1 (16) on diagonally position to prevent spring pin 6 × 36 (21) from coming out.

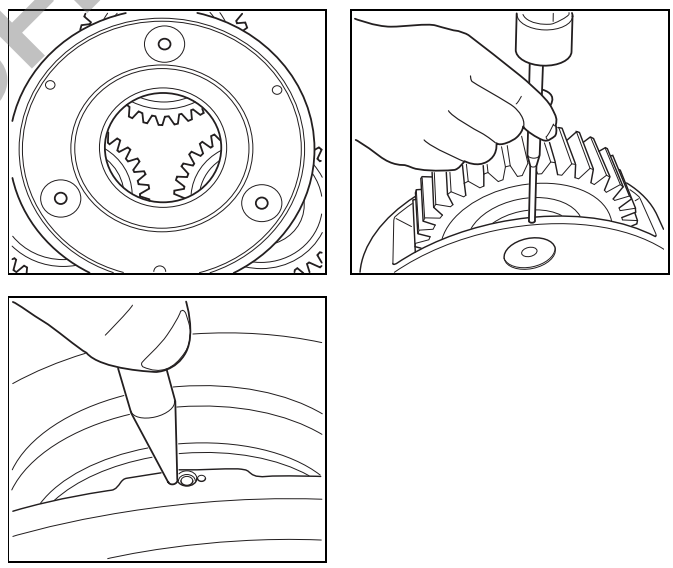
Fig. 19 Assembling carrier 1 ass'y

Note	Refer to Fig. 18 "Detail of calking".

PREVIEW - YOUFIXTHIS.COM

Download full manual at youfixthis.com

Figure 1. Regulator operation explanation diagram

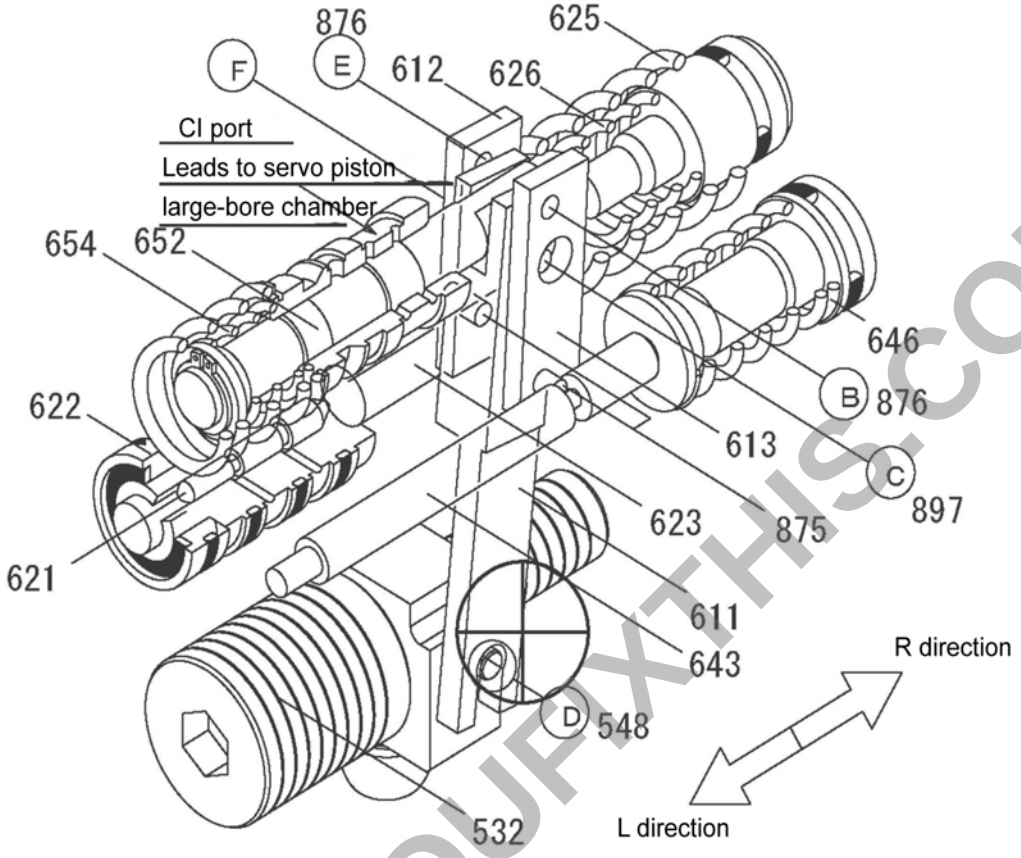

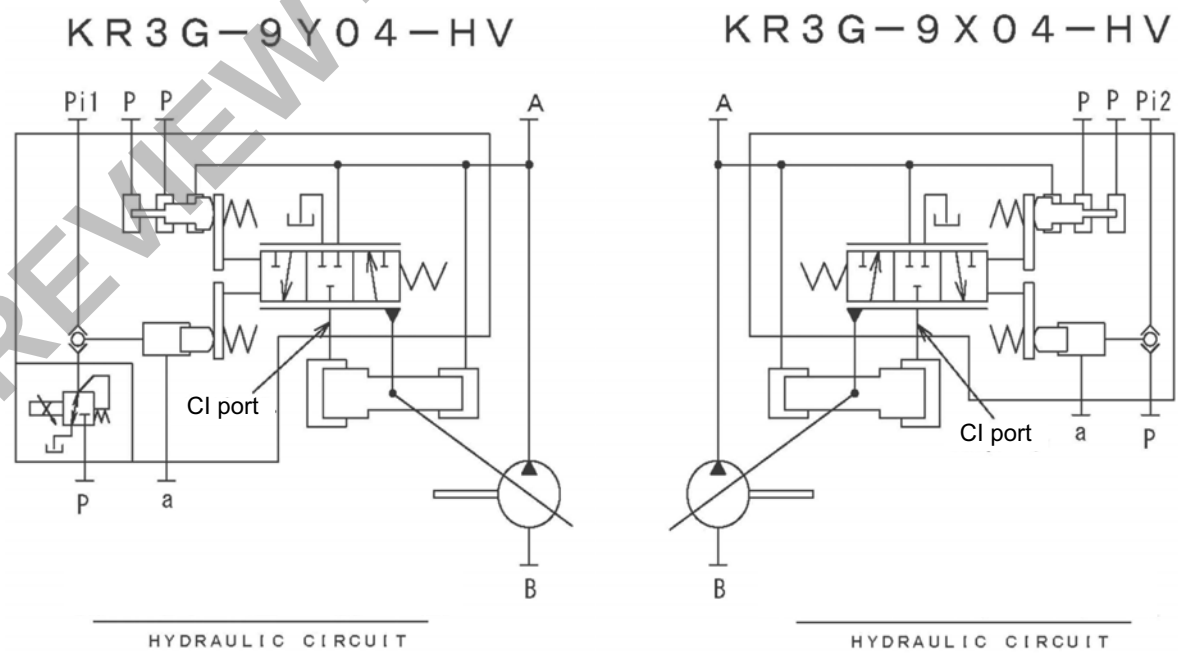

PREVIEW - YOUFIXTHIS.COM

Download full manual at youfixthis.com

[12] Roll up and open the hose cover (1).

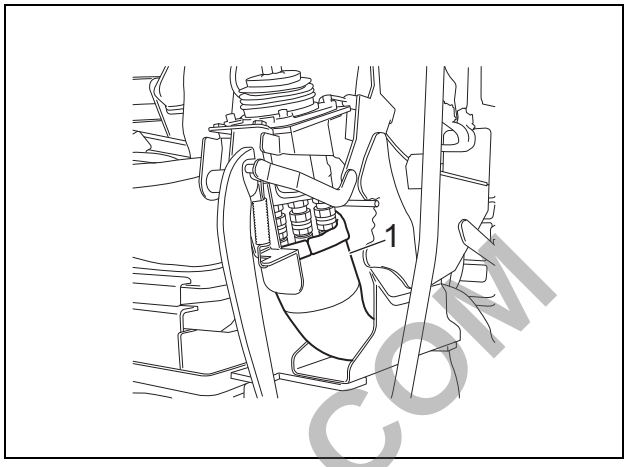

[13] Remove 6 hoses (1) using a 22-mm wrench.
- Mark the joystick remote control valve and hose joints so that they can be connected correctly at the time of assembly.
- Use caps or plugs to cover the joystick remote control valve and hoses to prevent the entry of water, dust or dirt.
- Clean the joystick remote control valve and hoses by spraying with a parts cleaner to prevent scratches and prevent dirt from accumulating on the connectors.

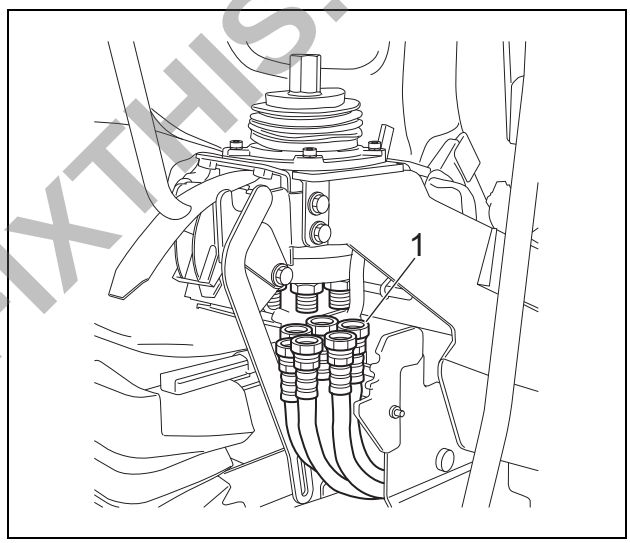

[14] Remove 4 mounting bolts (1) using a 5-mm hexagon wrench.

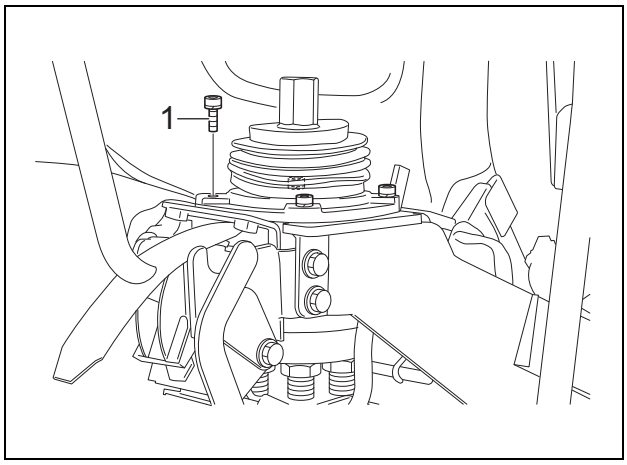

PREVIEW - YOUFIXTHIS.COM

Download full manual at youfixthis.com

5-16 Upper Swing Body: Tank

1 Removal and Installation of Hydraulic Oil Tank

Warnings	• Keep away from fire. • Bleed off the pressure in the hydraulic oil tank before beginning work. • The temperature of the hydraulic oil is high immediately after stopping the engine. Wait until the hydraulic oil temperature has decreased (40°C or less) before beginning work.

Cautions	• Be sure to stop the engine before beginning work. • Be sure to inspect the wire rope and other suspended items before beginning work. • Do not stand or pass under the suspended load (hydraulic oil tank).

Items to prepare

- Wrench (7 mm, 19 mm, 22 mm, 27 mm, 36 mm)
- Eyebolts (12 mm × 2)
- Shackles (with the required lifting capacity × 2)
- Wire rope (with the required breaking load)
- Crane (that meets the lifting capacity)
- Marking pen
- Caps
- Plugs
- Waste oil can
- Rags
- Cleaning fluid
- Crossties

[1] Drain the oil from the hydraulic oil tank. (For details, see "Draining Oil from Hydraulic Oil Tank")

[2] Use a 19-mm wrench to remove the 6 installation bolts (1), and then remove the under cover (2).

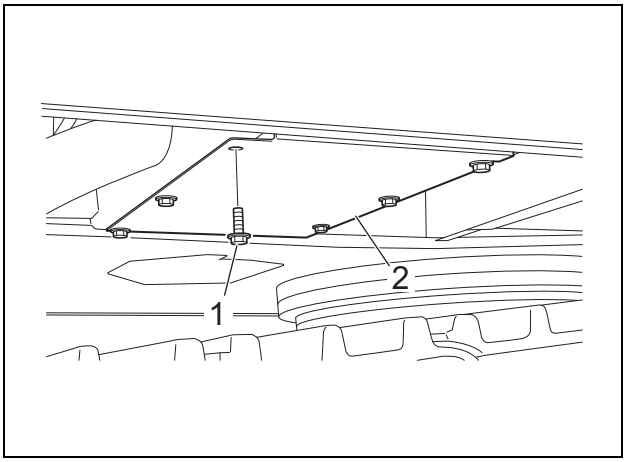

PREVIEW - YOUFIXTHIS.COM

Download full manual at youfixthis.com

PREVIEW ONLY

You're viewing 25 of 835 pages

The full manual includes:

- All 835 pages, complete
- Searchable PDF (find any keyword)
- No watermarks
- Instant download
- Print-ready quality

GET FULL MANUAL NOW

Link-Belt 290 X2 EX Service Manual

Scan or click anywhere
youfixthis.com

Click anywhere on this page to get the full manual