350X3

Excavator

SERVICE MANUAL

WLSM3306-02LX

PREVIEW - YOUFIXTHIS.COM

Sep. 2011

Download full manual at youfixthis.com

TABLE OF CONTENTS

Specifications **2-3**
Travel Lower Body 2-3

Main Equipment Table **2-4**
Lower Component 2-4

Main Equipment Structure and Operation Explanation **2-6**
Travel Motor 2-6

Port Diagram **2-20**
Travel Motor 2-20
Center Joint 2-21

Basic Functions **2-22**
Travel Speed Selection 2-22
Travel Alarm 2-23

Removal and Installation of Track **2-26**
Removal and Installation of Shoe Assembly **2-27**
Removal of Shoe Assembly 2-27
Installation of Shoe Assembly 2-28

Removal and Installation of Shoe Plate **2-31**
Removal of Shoe Plate 2-31
Installation of Shoe Plate 2-31

Removal and Installation of Roller **2-32**
Removal and Installation of Upper Roller **2-33**
Removal of Upper Roller 2-33
Installation of Upper Roller 2-33

Assembly and Disassembly of Upper Roller **2-35**
Configuration Diagram 2-35
Dimension Diagram 2-36
Jig Dimension Diagram 2-36
Disassembly Procedures 2-36
Assembly Procedures 2-38

Removal and Installation of Lower Roller **2-42**
Removal of Lower Roller 2-42
Installation of Lower Roller 2-43

Assembly and Disassembly of Lower Roller **2-44**
Configuration Diagram 2-44
Dimension Diagram 2-45
Jig Dimension Diagram 2-45
Disassembly Procedures 2-45
Assembly Procedures 2-47

Removal and Installation of Sprocket **2-50**
Removal of Sprocket 2-50
Installation of Sprocket 2-51

Removal and Installation of Take-up Roller **2-52**
Removal of Take-up Roller 2-52
Installation of Take-up Roller 2-53

Assembly and Disassembly of Take-up Roller **2-54**

PREVIEW - YOUFIXTHIS.COM

Download full manual at youfixthis.com

TABLE OF CONTENTS

Specifications **3-2**
Upper Side Work System 3-2
Swing Units 3-2

Main Equipment Table **3-3**
Upper Component 3-3

Main Equipment Structure and Operation Explanation **3-4**
Swing Motor 3-4

Port Diagram **3-12**
Swing Motor 3-12

Basic Functions **3-13**
Swing Brake 3-13
Swing Lock 3-14
Swing Speed Limit 3-15
Free Swing 3-15

Removal and Installation of Swing Unit **3-17**
Removal of Swing Unit 3-17
Installation of Swing Unit 3-19

Assembly and Disassembly of Swing Motor **3-20**
Causes of Trouble and Solutions 3-21
Maintenance Standard Table 3-23
Jig 3-25
Disassembly 3-25
Assembly 3-27
Swing Motor Internal Structural Diagram 3-32

Assembly and Disassembly of Swing Unit **3-34**
Disassembly 3-34
Assembly 3-36

Removal and Installation of Counterweight **3-38**
Removal of Counterweight 3-38
Installation of Counterweight 3-39

Pressure Measurement and Adjustment Procedures **3-40**
Main Pressure Measurement 3-40

Drain Volume Measurement Procedures **3-42**
Preparations 3-42
Swing Motor Drain Volume Measurement 3-42

Air Bleed Procedure **3-43**
Swing Motor 3-43

PREVIEW - YOUFIXTHIS.COM

Download full manual at youfixthis.com

H. ENGINE

PREVIEW - YOUFIXTHIS.COM

Download full manual at youfixthis.com

TABLE OF CONTENTS

Specifications.....5-4
Operating Device.....5-4
Hydraulic Equipment.....5-5

Main Equipment Table.....5-6
Hydraulic Device.....5-6
Control-related.....5-7

Basic Functions.....5-11
Oil Temperature Gauge.....5-11
Static Horsepower Control.....5-12
Pressure Boost Control.....5-12
Pump Standby Pressure Control.....5-14
Swing Relief Cut.....5-16
Swing hunting prevention.....5-16
Boom Down Energy Save.....5-17
Auto Energy Save.....5-17
Overload Reduction Control.....5-18
Pump Horsepower Cut Control.....5-25
Pump Horsepower Boost Control.....5-28
Solenoid Sticking Prevention.....5-29
Option line control.....5-30
Option line control.....5-35
Breaker Mode.....5-37
Crusher Mode.....5-38

Port Diagram.....5-39
Hydraulic Pump (standard model).....5-39
Control Valve.....5-41
4 Stack Solenoid Valve.....5-45
2 Stack Solenoid Valve.....5-47
Remote Control Valves (upper, travel).....5-47
Cushion Valve.....5-49
2-way Selector Valve.....5-50
Direction Valve.....5-51
Relief Valve (electromagnetic proportional).....5-52
Manifold Under Cab.....5-53
Manifold (accumulator section).....5-54
Manifold (hydraulic oil tank section).....5-55

Main Equipment Structure and Operation Explanation..... 0
Hydraulic Pump..... 0

Control Valve.....5-62
Basic configuration.....5-62
Operation.....5-62

4 Stack Solenoid Valve Operation Explanation.....5-99
External Shape Diagram and Component Parts.....5-99
Operation Explanation.....5-99

Upper Pilot Valve (remote control valve).....5-100
Structure.....5-100
Function.....5-100
Operation.....5-101
Structural Diagram.....5-105

PREVIEW - YOUFIXTHIS.COM

Download full manual at youfixthis.com

N - Cab

PREVIEW - YOUFIXTHIS.COM

Download full manual at youfixthis.com

TABLE OF CONTENTS

Electrical and Engine Functions and Service Support....7-4
Basic Functions....7-5
Monitor Display Dimming....7-5
Eco Gauge....7-6
Diagnostic Trouble Code Indicator....7-6
Clock....7-7
Fuel economy gauge....7-7

Accessories....7-9
Working Light....7-9
Room lamp....7-10
Radio Mute....7-12
Wiper and washer....7-13
Back/Side View Monitor....7-14
Anti-theft....7-15

Milli-amp List....7-17
Safety....7-19
Lever lock....7-19
Battery save function....7-20
Alternator Power Generation Detection....7-21

Service Support....7-23
Screen Operations....7-23
Screen Display List....7-23
CHECK Screen List....7-24
SETUP Screen List....7-37

Setting....7-40
Model Select....7-40
Throttle Volume Default Setting....7-43
Password Setting....7-44
Adjusting the Clock....7-44
Parameter Settings....7-44
Option Flow Pressure Setting....7-46
Screen Brightness Setting....7-50

EXPLANATION ON THE COMPUTERS....7-51
Connection Connector Pin Layout....7-56
Computer A....7-56
Monitor....7-57

Sequence Circuit Diagram....7-58
Code table....7-58
Overall....7-61

Block diagram....7-63
Computer A....7-63
Computer B....7-64
ECM....7-65
Monitor....7-66
Air Conditioner....7-67
Lever Lock....7-68
Horn....7-68
Working lights....7-68
Option....7-69

PREVIEW - YOUFIXTHIS.COM

Download full manual at youfixthis.com

TABLE OF CONTENTS

Main Equipment Table..... 8-2
Backhoe Attachment..... 8-2

Maintenance Standards..... 8-3
Attachment (backhoe)..... 8-3

Removal and Installation of Bucket Cylinder..... 8-11
Removal of Bucket Cylinder..... 8-11
Installation of Bucket Cylinder..... 8-13

Removal and Installation of Arm Cylinder..... 8-15
Removal of Arm Cylinder..... 8-15
Installation of Arm Cylinder..... 8-17

Removal and Installation of Boom Cylinder..... 8-20
Removal of Boom Cylinder..... 8-20
Installation of Boom Cylinder..... 8-22

Procedures for Operation/Assembly and Disassembly of Hydraulic Cylinder..... 8-25
Specifications and structure diagram (including the assembly diagram and parts table)..... 8-25
Handling Precautions..... 8-28
Maintenance Inspection and Service..... 8-31
Trouble Diagnostics..... 8-32
Storage Standards..... 8-36
Assembly and Disassembly Procedures..... 8-37
Structural Diagram..... 8-50

Removal and Installation of Bucket..... 8-56
Removal of Bucket..... 8-56
Installation of Bucket..... 8-56

Removal and Installation of Bucket Link..... 8-58
Removal of Bucket Link..... 8-58
Installation of Bucket Link..... 8-59

Removal and Installation of Arm..... 8-60
Removal of Arm..... 8-60
Installation of Arm..... 8-61

Removal and Installation of Boom..... 8-62
Removal of Boom..... 8-62
Installation of Boom..... 8-65
Main Data..... 8-67
Performance..... 8-67
Main Unit Dimensions..... 8-67

PREVIEW - YOUFIXTHIS.COM

Download full manual at youfixthis.com

TABLE OF CONTENTS

Specifications **9-3**
Main Unit Weight **9-4**
Divided Weight (standard specifications) 350X3 9-4
Stand Alone Part Weight (350X3) 9-5
Shoe Weight (per side) 350X3 9-5
Arm Weight (350X3) 9-5

Bolt Size and Torque Table **9-6**
Special Torque Settings 9-6

Overall View **9-11**
350X3 9-11

Work Range Diagram **9-14**
350X3 9-14

New Machine Performance Judgment Table **9-20**
Standard Table 9-20
Measurement Method 9-22

FLUIDS AND LUBRICANTS **9-27**
HYDRAULIC FLUID 9-27
ENGINE OIL 9-27
OIL RANGE 9-27
FUEL 9-27
Conditions applicable to diesel fuel 9-27
RECOMMENDED CONDITIONS THAT CAN BE APPLIED TO DIESEL FUEL 9-27

Main Unit-side DTC List **9-29**
Main Unit-side Trouble **9-31**
Diagnostic Trouble Code: 7000 P1 Pressure Sensor Signal Abnormality 9-31
Diagnostic Trouble Code: 7001 P2 Pressure Sensor Signal Abnormality 9-32
Diagnostic Trouble Code: 7002 N1 Pressure Sensor Signal Abnormality 9-34
Diagnostic Trouble Code: 7003 N2 Pressure Sensor Signal Abnormality 9-35
Diagnostic Trouble Code: 7004 Overload Pressure Sensor Signal Abnormality 9-37
Diagnostic Trouble Code: 7005 Bottom Pressure Sensor Signal Abnormality 9-39
Diagnostic Trouble Code: 7006 Rod Pressure Sensor Signal Abnormality 9-40
Diagnostic Trouble Code: 7020 Upper Pressure Sensor Signal Abnormality 9-41
Diagnostic Trouble Code: 7021 Swing Pressure Sensor Signal Abnormality 9-43
Diagnostic Trouble Code: 7022 Travel Pressure Sensor Signal Abnormality 9-44
Diagnostic Trouble Code: 7023 Arm-in Pressure Sensor Signal Abnormality 9-46
Diagnostic Trouble Code: 7040 Fuel Level Sensor Signal Abnormality 9-47
Diagnostic Trouble Code: 7041 Oil Temperature Sensor Signal Abnormality 9-48
Diagnostic Trouble Code: 7045 Monitor Thermistor Signal Abnormality 9-50
Diagnostic Trouble Code: 7060 Boom Angle Sensor Signal Abnormality 9-50
Diagnostic Trouble Code: 7061 Arm Angle Sensor Signal Abnormality 9-51
Diagnostic Trouble Code: 7063 Return Filter Clogging Pressure Switch Signal Abnormality 9-53
Diagnostic Trouble Code: 7065 Boom-up Pilot Pressure Sensor Signal Abnormality 9-56
Diagnostic Trouble Code: 7066 Bucket-close Pilot Pressure Sensor Signal Abnormality 9-58
Diagnostic Trouble Code: 7200 Swing Brake Solenoid Signal Abnormality 9-60
Diagnostic Trouble Code: 7201 Travel High-speed Solenoid Signal Abnormality 9-62
Diagnostic Trouble Code: 7202 Pressure Boost Solenoid Signal Abnormality 9-64
Diagnostic Trouble Code: 7203 Travel Alarm Buzzer Signal Abnormality 9-67
Diagnostic Trouble Code: 7204 Power Save Solenoid Signal Abnormality 9-69
Diagnostic Trouble Code: 7205 Feed Pump Relay Signal Abnormality 9-72
Diagnostic Trouble Code: 7206 Option Line Switchover Solenoid Signal Abnormality 9-74

PREVIEW - YOUFIXTHIS.COM

Download full manual at youfixthis.com

Contents

Drain Volume Measurement Procedures	3-42	72272769-0en
Air Bleed Procedure	3-43	76863098-0en
H. ENGINE	**4-1**	53979139-0en
Specifications	4-4	53620175-0en
Main Equipment Table	4-5	78443383-0en
Basic Functions	4-7	28190417-0en
Primary specifications	4-41	42025464-1en
Function, Structure, Operation	4-44	23620884-1en
Symptom	4-97	19251071-0en
Functional Inspection	4-111	69663730-0en
Maintenance precautions	4-122	38063852-1en
Removal and Installation of Engine Assembly	4-125	16929295-2en
Removal and installation of the fuel cooler engine inter-cooler radiator and oil cooler	4-132	78628914-0en
Removal and Installation of Turbo Charger	4-141	43042560-2en
Removal and Installation of EGR Cooler and EGR Valve	4-143	18789894-0en
Removal and Installation of Engine Hood	4-147	76340834-2en
Removal and Installation of Muffler	4-149	65219164-2en
Removal and Installation of Cylinder Head Cover	4-150	78412812-0en
Removal and Installation of Cylinder Block	4-197	75278091-0en
Lubrication System	4-249	70203119-0en
Cooling System	4-289	69949934-0en
Removal and Installation of Exhaust Manifold	4-297	78382524-0en
Disassembly, Removal and Installation of DPD Assembly	4-303	96284664-0en
Removal and Installation of Fuel Tank	4-307	68708673-2en
Removal and Installation of Fuel Supply Pump	4-311	18906180-0en
Removal and Installation of Common Rail Assembly	4-315	24718817-0en
Removal and Installation of Injector	4-324	49612614-0en
Removal and Installation of Starter Motor	4-330	71877762-1en
Removal and Installation of Alternator	4-332	91536887-2en
Preheating System	4-333	85293671-0en
Introduction to the trouble diagnosis	4-335	89555165-1en
J. HYDRAULIC EQUIPMENT (PUMP, OPERATION SYSTEM VALVE)	**5-1**	68276312-0en
Specifications	5-4	53620175-0en
Main Equipment Table	5-6	78443383-0en
Basic Functions	5-11	28190417-0en
Port Diagram	5-39	89929564-0en
Main Equipment Structure and Operation Explanation	0	71646005-0en
Control Valve	5-62	17724516-0en
4 Stack Solenoid Valve Operation Explanation	5-99	67705302-0en
Upper Pilot Valve (remote control valve)	5-100	25350181-0en
Travel Pilot Valve (remote control valve)	5-106	39613125-0en
Cushion Valve	5-112	11949795-0en
Removal and Installation of Hydraulic Oil Tank	5-117	38912212-2en
Removal and Installation of Hydraulic Pump	5-121	76073536-1en
Removal and Installation of Control Valve	5-127	23987319-2en

PREVIEW - YOUFIXTHIS.COM

Download full manual at youfixthis.com

Removal and Installation of Grease Cylinder

Warning

- When loosening the grease cylinder check valve, loosen it a little at a timec
- The pressure inside the cylinder is very high, so there is a danger of grease being expelled and the plug flying off.
  The check valve adjustment procedure should not be done in front of the check valve.
- Do not get under the machine when the main unit is jacked up.
- Make sure to place the main unit on wood planks or the like to prevent falling.
- Align the shoe assembly feed location and stop the engine except when working.

Items to prepare

- Wrenches [24 mm (0.945 in), 36 mm (1.417 in)]
- Hammer
- Lifting equipment
- Loctite #262
- Striking jig
- Liftcrane
- Crowbar
- Wood plank
- Rag

Removal of grease cylinder

1. Remove the shoe assembly.
   See the "Removal and Installation of Shoe Assembly" procedure.
2. Use a crowbar (3) to pull off the take-up roller (1) and recoil spring assembly about 3.937 in from the side frame (2).
   When removing the grease cylinder, use a wood plank or the like (4) to prevent the take-up roller (1) and recoil spring assembly from coming out.

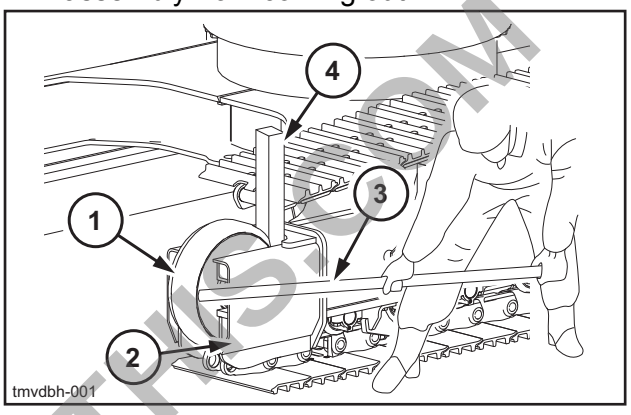

3. Jack up the side frame on the side where the grease cylinder is being removed as shown in the diagram.
   Jack up so that the shoe is floating about 1.969 in, and insert wood plank (1) under the lower frame to prevent falling.

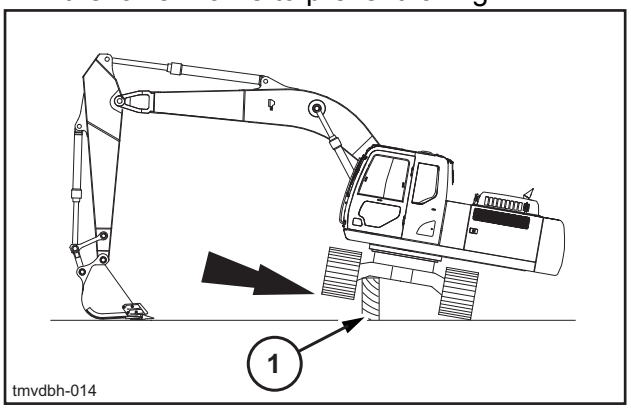

4. Use a wrench [36 mm (1.417 in)] to remove the bolts (1) and washers (2), and then remove the track guard (3).
   Tightening torque for bolt installation: 665.39 - 773.84 lbf・ft

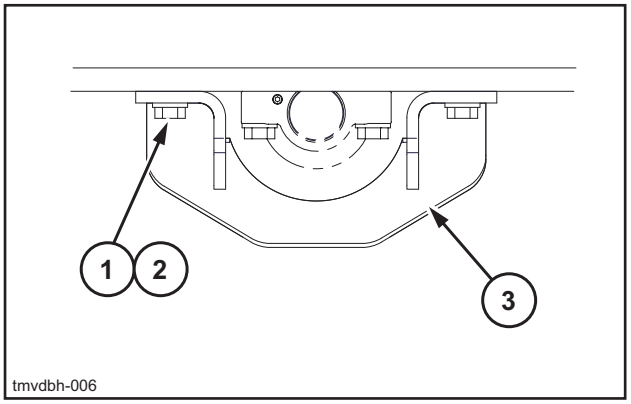

PREVIEW - YOUFIXTHIS.COM

Download full manual at youfixthis.com

Brake Section

The cylinder (111) is coupled with the drive shaft (101) by the gear. Also, the separator plate (743) is constrained for circumferential rotation by the arc groove cut into the casing (301).
When the friction plate (742) that is gear coupled to the cylinder outer circumference section is pressed to the casing (301) by the brake spring (712) via the separator plate (743) and the brake piston (702), friction force is generated between the friction plate and casing and between the separator plate and the brake piston. The drive shaft is constrained and braked by this friction force.
On the other hand, when brake release pressure is applied to the oil chamber (1) formed between the brake piston and the casing and the hydraulic pressure (3) wins out over the spring force (2), the brake piston moves, the force pressing the friction plate against the casing disappears, and the brake is released.

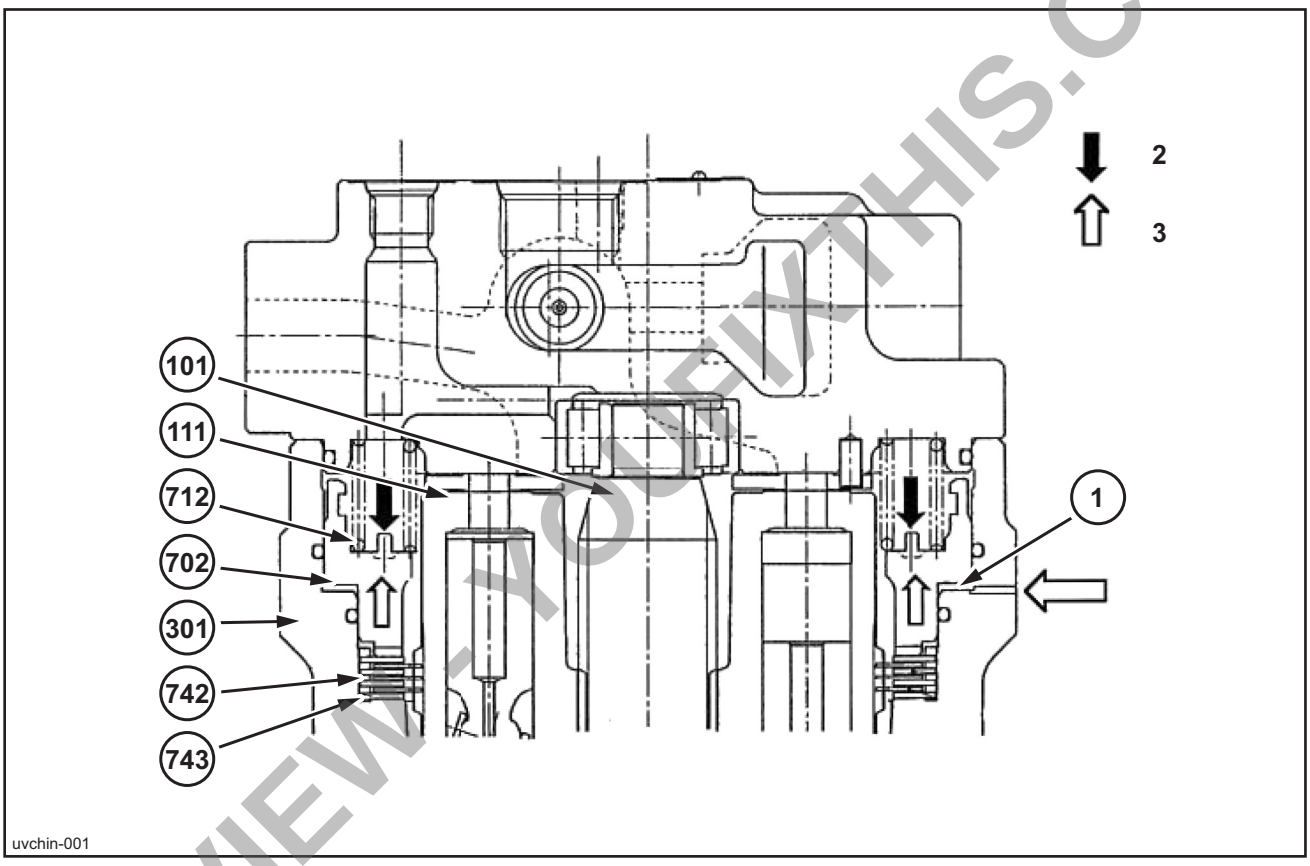

Diagram 3 Brake operation diagram

Relief Valve Operation Explanation (relief valve model: KRD22EK10)

1. Operation explanation for when the relief valve is pressurized
   In the case where the P port is pressurized with the tank pressure,the P and R ports are initially at the tank pressure and the valve status is as shown in Diagram 4 (1).
   At the pressure where there is balance between the hydraulic pressure determined by the product of the pressure P and the pressurized area A1 of the plunger (301) on the one hand and the hydraulic pressure determined by the product of the spring (321) load FSP and plunger (301) pressurized area A2 and the g chamber pressure Pg on the other, the relief valve starts to operate.
   After that, the g chamber pressure rises and the piston (302) starts its stroke.
   Accompanying this movement, the load on the spring (321) increases.

PREVIEW - YOUFIXTHIS.COM

Download full manual at youfixthis.com

- Switches the DPD gauge from regeneration progress display to accumulated amount display.
- Puts out the "AUTO DPD RE-GEN" and "CAUTION! HOT EXHAUST" messages.
- Starts the auto idle/idle stop control.

[9] Regeneration hydraulic pressure load assist: During manual regeneration, puts a load on the pump in order to raise the exhaust gas temperature.

- The computer set the pump flow proportional valve to the minimum flow at 740 mA.
- After 1 sec., the computer sets the boom 2 proportional valve to 600 mA for the maximum load.
- After 1 sec., the computer sets the pump flow proportional valve to 600 mA.
- After 30 sec., the computer controls the pump flow proportional valve so that the DPD exhaust gas temperature (before DOC) is constant at 518.0 °F. (Lowers it gradually 50 mA/second. update period 15 sec., update width 5 mA)

■Hydraulic Assist Load

Summary
During DPD manual regeneration, hydraulic load is added to raise the exhaust gas temperature.

Operation explanation

[1] When regeneration starts, the system sets the pump flow proportional value to the minimum flow (Current 740 mA).

[2] After 1 sec., the system sets the boom 2 proportional valve to the maximum load (Current 600 mA).

[3] After 1 sec., the system sets the current for pump flow proportional valve to 600 mA. (*1)

[4] After 30 sec., the system controls the pump flow proportional valve so that the DPD exhaust gas temperature (before DOC) is constant at 518.0°F. (*2) (*3)

- Lowers it gradually 50 mA/sec..
- Current update width: 5 mA, update period 15 sec.
- If the DPD exhaust gas temperature (before DOC) exceeds 752.0°F, addition of the hydraulic load is stopped.
  When the temperature falls below 482.0°F, the addition of the hydraulic load resumes after 1 sec..

PREVIEW - YOUFIXTHIS.COM

Download full manual at youfixthis.com

It also blinks the monitor depending on the detected DTC when the body ground terminal and diagnostic switch terminal of the DLC are shorted.
A monitor circuit is incorporated inside the ECM and monitors operation of the light.

2. Inspection of the monitor warning light illumination circuit system Inspection
Inspection if the monitor does not show an abnormality display when the starter switch is switched ON

[1] Perform the OBD system check.

[2] Inspect the monitor bulb.

[3] Replace the valve if a problem is discovered.

[4] Inspect the monitor circuit.

- No open circuit or high resistance should be found between the fuse and monitor.
- No open circuit or high resistance should be found between the monitor and ECM.

[5] Repair the circuit if a problem is discovered.

[6] Replace the ECM.
Removal of ECM
Installation of ECM

[7] After replacing the ECM, perform EGR learning.

PREVIEW - YOUFIXTHIS.COM

Download full manual at youfixthis.com

17. Oil level gauge guide tube Removal
    [1] Remove the oil level gauge from the oil level gauge guide tube.
    [2] Disengage the oil level gauge guide tube from the front engine hanger bracket.
    [3] Remove the oil level gauge guide tube from the cylinder block.

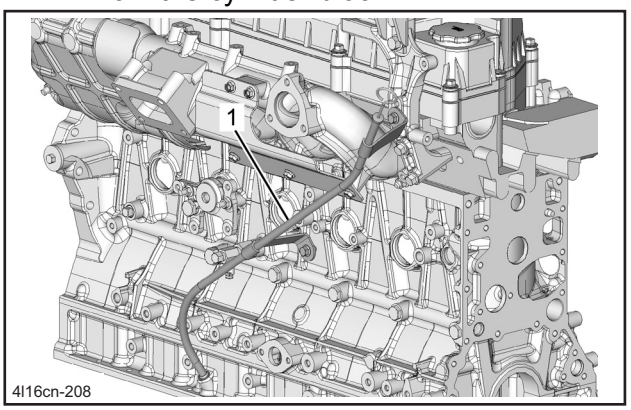

1	Oil level gauge guide tube

18. Intake throttle valve Removal
    [1] Remove the air duct from the intake throttle valve.
    [2] Disengage the harness connector from the intake throttle valve.

Note

・Pull the lock operation portion to release the lock.

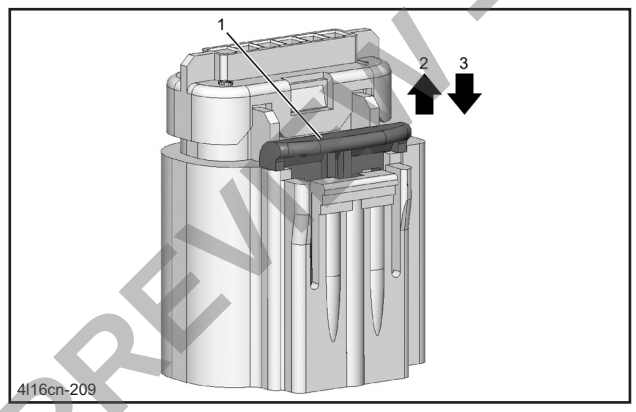

1	Lock operation section
2	Lock release
3	Lock

    [3] Remove the intake throttle valve from the inlet pipe.

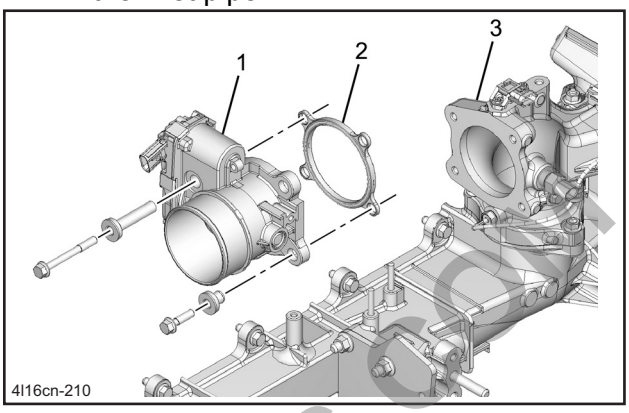

1	Intake throttle valve
2	Gasket
3	Inlet pipe

19. Inlet pipe Removal
    [1] Disengage the harness connector from the boost sensor.
    [2] Disconnect the harness connector from the boost temperature sensor.
    [3] Disconnect the harness connector from the IMT sensor.
    [4] Remove the harness clip from the inlet pipe.

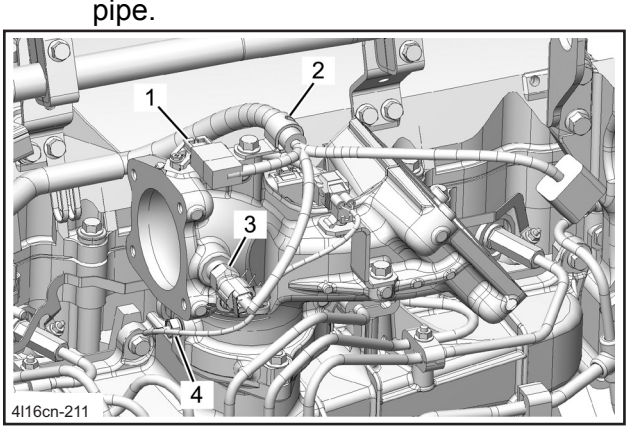

1	Boost sensor
2	Harness clip
3	Boost temperature sensor
4	IMT sensor

PREVIEW - YOUFIXTHIS.COM

Download full manual at youfixthis.com

[9] Connect the oil return pipe to the turbocharger assembly.
Tightening torque: 24 N・m {2.4 kgf・m / 17 lb・ft}

Caution
・Use a new gasket.

[10] Install the oil feed pipe to the pipe bracket.
Tightening torque: 34 N・m {3.5 kgf・m / 25 lb・ft}
Tightening torque: 24 N・m {2.4 kgf・m / 17 lb・ft} Clip

Caution
・Use a new gasket.

[11] Connect the oil feed pipe to the turbocharger assembly.
Tightening torque: 34 N・m {3.5 kgf・m / 25 lb・ft}
Tightening torque: 24 N・m {2.4 kgf・m / 17 lb・ft} Clip

Caution
・Use a new gasket.

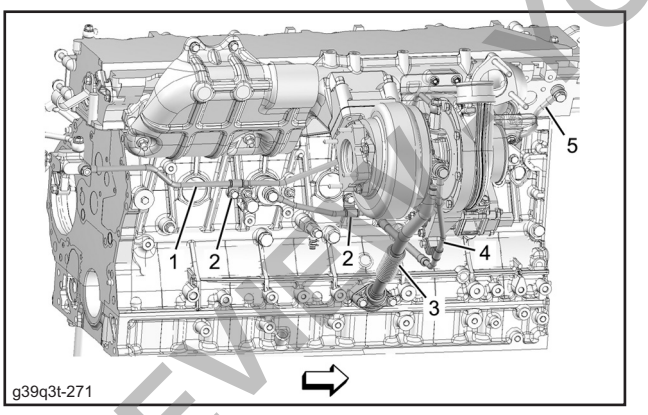

1	Oil feed pipe
2	Clip
3	Oil return pipe
4	Water feed pipe
5	Water return pipe

[12] Install the exhaust pipe to the turbocharger assembly.

[13] Install the air intake hose to the turbocharger assembly and the intercooler.

[14] Install the air cleaner duct to the air cleaner assembly and the turbocharger assembly.

32. Engine oil Filling

[1] Replenish the engine oil with the engine assembly.

Caution
・Check the tightening of the drain plug before adding engine oil.

33. Engine harness Connect

[1] Connect the engine harness to the engine assembly.

Note
・Connect each connector.

34. Coolant Filling

[1] Loosen the valve using a wrench.

[2] Replenish the coolant with the radiator.

Caution
・Be careful not to let coolant overflow splash on the exhaust system parts.
・Coolant overflow should be wiped off.

[3] Tighten the valve using a wrench.

Caution
・Use new gaskets.

Tightening torque: 22 N・m {2.2 kgf・m / 16 lb・ft}

[4] Replenish the coolant with the radiator.

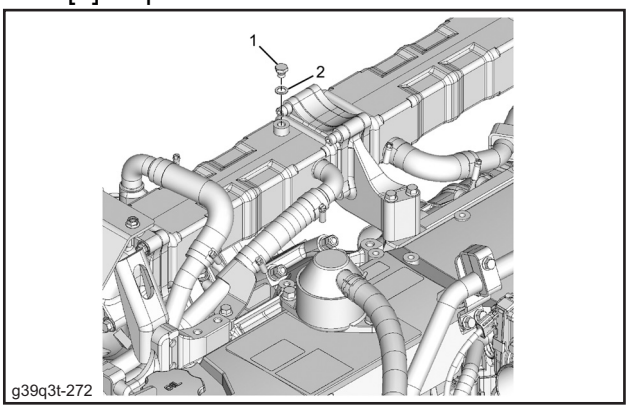

1	Valve
2	Gasket

35. Battery ground cable Connect

[1] Connect the battery ground cable to the battery.

PREVIEW YOUFIXTHIS.COM

Download full manual at youfixthis.com

[47] Check the pressure gauge.
Specified value: 27.0 kPa {203 mmHg / 8 inHg}

Note

- When the pressure gauge is likely to indicate a value exceeding the standard value during inspection, release the fuel being blocked.
- Air mixture is checked with the negative pressure amount while the fuel flow is being blocked.

[48] If the standard negative pressure cannot be generated, inspect to see if there is a cut or crack with the fuel hose.

[49] If a problem is discovered, replace the fuel hose.

[50] Inspect to see if appropriate clamp is used.

[51] If a problem is discovered, replace the clamp with an appropriate one.

[52] Turn OFF the starter switch.

[53] Inspect the suction control valve harness connector for a contact failure.

[54] If a problem is discovered, repair the harness connector.

[55] Inspect the ECM harness connector for a contact failure.

[56] If a problem is discovered, repair the harness connector.

[57] Inspect each circuit for high resistance.

[58] Repair the circuit if a problem is discovered.

[59] If the suction control valve harness connector and the ECM harness connector are normal and there is no high resistance in each circuit, replace the fuel supply pump and the fuel filter element.
Refer to "1.Engine 1C.Fuel System(6HK1X) Fuel supply pump Removal".
Refer to "1.Engine 1C.Fuel System(6HK1X) Fuel supply pump Installation".
Refer to "1.Engine 1C.Fuel System(6HK1X) Fuel filter element Removal".
Refer to "1.Engine 1C.Fuel System(6HK1X) Fuel filter element Installation".

Note

- When replacing the fuel supply pump, it is required to also replace the fuel filter element at the same time.

[60] Perform the unit difference learning of the fuel supply pump to the ECM.

3. DTC P0088 Confirm Resolution

[1] Clear the DTC using the trouble diagnosis scan tool.

[2] Turn the starter switch OFF for 30 seconds or longer.

[3] Start the engine.

[4] Perform a test-run.

[5] Use the trouble diagnosis scan tool to confirm that a DTC has not been detected.

DTC P0089 (Flash Code 151) Fuel Pressure Regulator Performance

1. DTC P0089 Priority DTC
DTC P0091
DTC P0092
DTC P0192
DTC P0193
DTC P0201
DTC P0202
DTC P0203
DTC P0204
DTC P0205
DTC P0206
DTC P2146
DTC P2149

2. DTC P0089 Diagnostics

[1] Wait for the specified period of time until the fuel pressure is released from the common rail.
Specified time： 2 min

[2] Check the fuel rail pressure sensor display with the trouble diagnosis scan tool.
Voltage： 0.9 - 1.0 V

[3] If the fuel rail pressure sensor display is outside the standard range, inspect the fuel pressure sensor harness connector for a contact failure.

PREVIEW - YOUFIXTHIS.COM

Download full manual at youfixthis.com

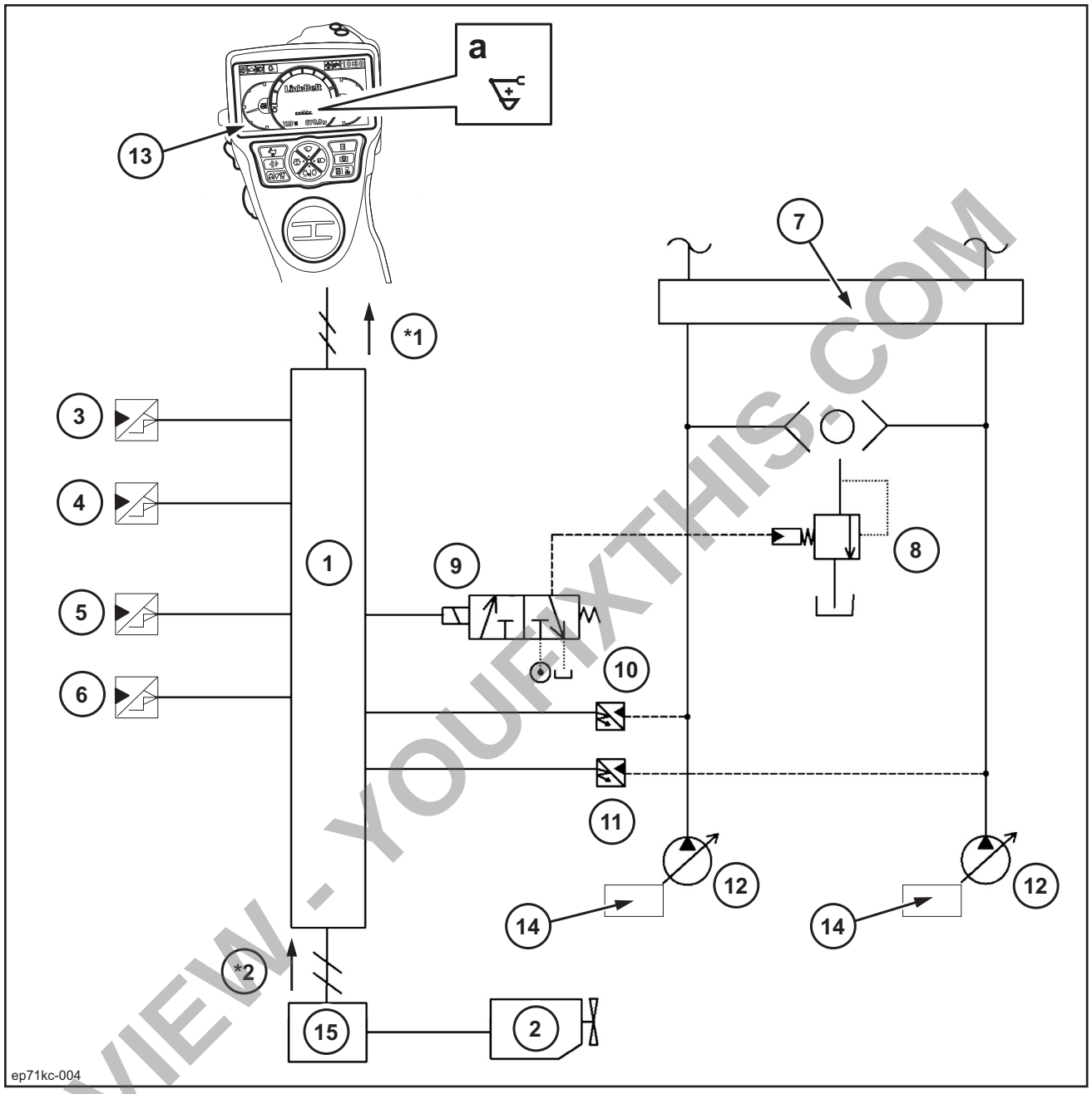

1	Computer A	6	Pressure sensor (option 2)	11	P2 pressure sensor
2	Engine	7	Control valve	12	Pump
3	Pressure sensor (upper)	8	Main relief valve	13	Monitor
4	Pressure sensor (travel)	9	Pressure boost solenoid	14	Regulator
5	Pressure sensor (option 1)	10	P1 pressure sensor	15	ECM

a	Pressure boost icon
b	Engine load ratio

Operation explanation

[1] Operation conditions for pressure boost control (SP or H mode)

The operation starts when all the following conditions are satisfied.

a. When high-load work is being performed (P1 or P2 is high pressure, upper pressure sensor ON, swing pressure sensor OFF)

b. When the work mode is SP or H mode.

PREVIEW - YOUFIXTHIS.COM

Download full manual at youfixthis.com

Also, in order to protect the shuttle section from contamination from the outside, a filter is mounted between the plates.
When removing, do not loosen the screws shown in the diagrams and be careful that internal parts are not dispersed.

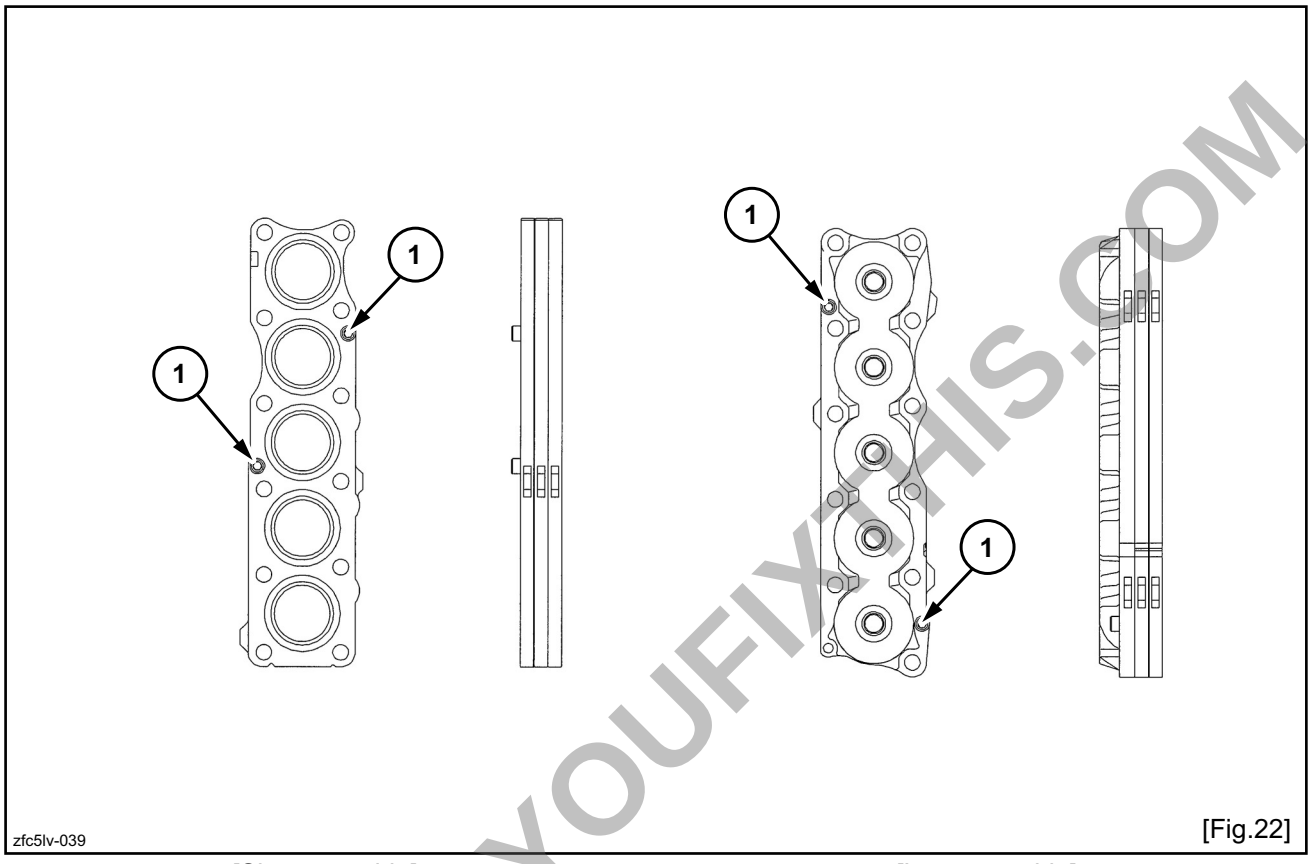

[Fig.22]

[Short cap side] [Long cap side]

1	Subassembly screw

8. Straight travel signal control valve [Fig. 19, Fig. 23]
This valve integrates the pilot pressure for the spool of the front system and travel selected with each plate assembly and is used to switch the straight travel spool.
When the Travel 1 pilot pressure is pressurized, the spool [V1] is switched.
When the Travel 2 pilot pressure is pressurized at the same time, the spool [V2] can be switched.
Here, when the front system pilot pressure [PA] is pressurized, the PA pressure flows into Pst and is led to the straight travel spool pilot chamber and the spool is switched.

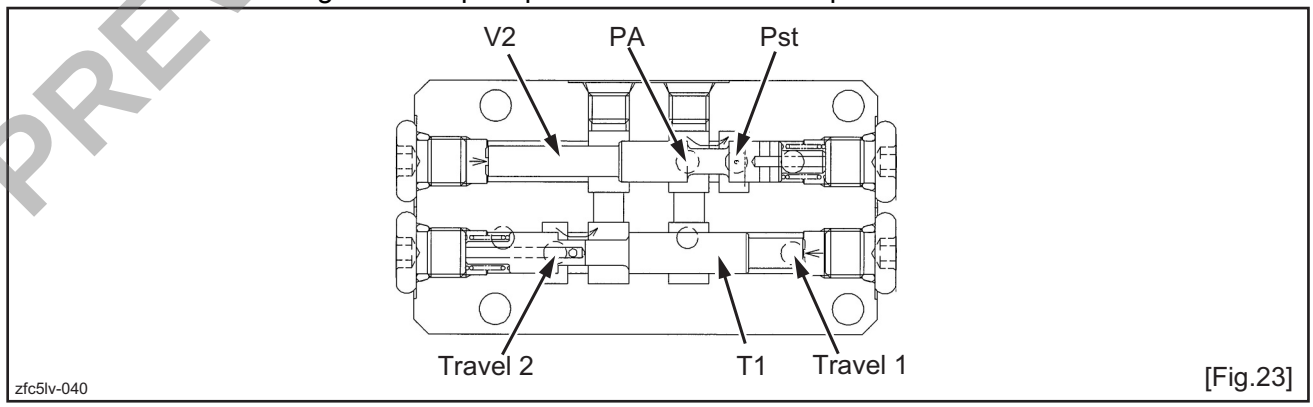

[Fig.23]

a	Travel 2
b	Travel 1

PREVIEW - YOUFIXTHIS.COM

Download full manual at youfixthis.com

(94) 6.49 - 7.96 lbf・ft

4. Install the plate assemblies (10) and (11), and tighten with the hexagon socket head bolts (75).
   Tightening torque: 28.77 - 32.45 lbf・ft
5. Install the caps (8) and (9), and tighten with the hexagon socket head bolts (74).
   Tightening torque: 28.77 - 32.45 lbf・ft
6. Screw in the plug assembly (110) with O-ring mounted into the option section (H-H cross section) short cap and tighten it.
   Tightening torque: 14.02 - 16.22 lbf・ft
7. Screw in the plugs (91) with O-rings (90) mounted into the option section (H-H cross section) and straight travel section (I-I cross section) long caps and tighten them.
   Tightening torque: 14.02 - 16.22 lbf・ft

⚠ Caution

1.Be careful not to apply excessive torque when tightening a plug to a cap.
2.Applying excessive torque could crush the cap threads.

Assembly of straight travel signal control valve

1. Screw the orifice plug (42-7) (1.417 in hexagon diameter) into the body (42-1) and tighten it.
   Tightening torque: 2.21 - 2.80 lbf・ft
2. Being careful about the insertion orientation, assemble the spools (42-2) and (42-3) and spring (42-4).
3. Tighten the plug assembly (42-5) (0.197 in hexagon socket diameter) with O-ring mounted to the body.
   Tightening torque: 9.96 - 12.17 lbf・ft
4. Install the body assembly (42) with the hexagon socket head bolts (83) (0.197 in hexagon socket diameter).
   Tightening torque: 6.49 - 7.96 lbf・ft

Assembly of add-on section

1. Screw the tie rod (96) into the main unit valve housing (1).
2. Install the main unit body matching surface O-rings (56) and (64).
   Execute Steps [1] - [3] below as necessary.
   [1] Remove the spool section assembly (111) and remove the matching surface O-rings (110-10) and (110-11).
   [2] Remove the inlet section assembly (99) and remove the matching surface O-rings (99-3) and (99-4).
   [3] Remove the spool section assembly (98) and remove the matching surface O-rings (98-10) and (98-11).
   [4] Install the outlet housing (95).
   [5] Tighten the 4 hexagon nuts (97) (0.866 in hexagon diameter).

Assembly of other plugs

1. Screw in and tighten the plug assembly (71) with O-ring mounted.
   Tightening torque: 85.57 - 94.42 lbf・ft
2. Screw in and tighten the plug assembly (72) with O-ring mounted.
   Tightening torque: 28.77 - 32.45 lbf・ft
3. Screw in and tighten the orifice plug (40).
   ightening torque: 10.33 - 13.27 lbf・ft
4. Screw in and tighten the plug assembly (92) with O-ring mounted.
   Tightening torque: 151.23 - 167.45 lbf・ft
5. Screw in and tighten the plug assembly (72) with O-ring mounted.
   Tightening torque: 53.85 - 58.27 lbf・ft
6. Screw in and tighten the plug assembly (73) with O-ring mounted.
   Tightening torque: 22.87 - 30.24 lbf・ft

PREVIEW - YOUFIXTHIS.COM

Download full manual at youfixthis.com

11. Use a wrench [13 mm (0.512 in)] to remove the 3 bolts (1), and then remove the bracket (2).

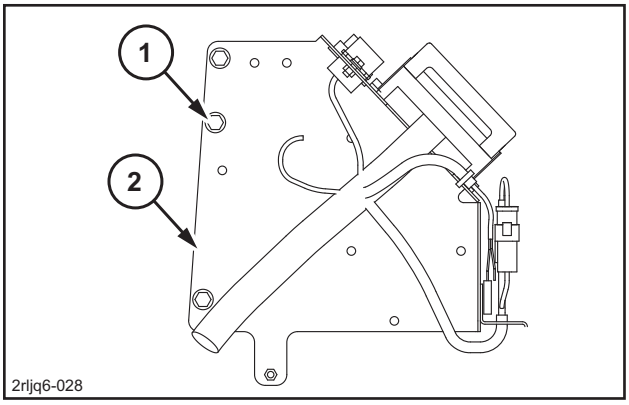

12. Use a flathead screwdriver or longnose pliers to remove the 2 clips (1), and then remove the suction ducts (2) (3).

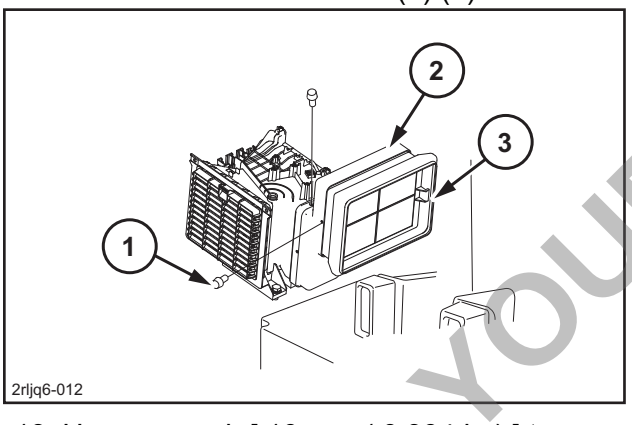

13. Use a wrench [10 mm (0.394 in)] to remove the 2 bolts (1), and then remove the bracket (2).

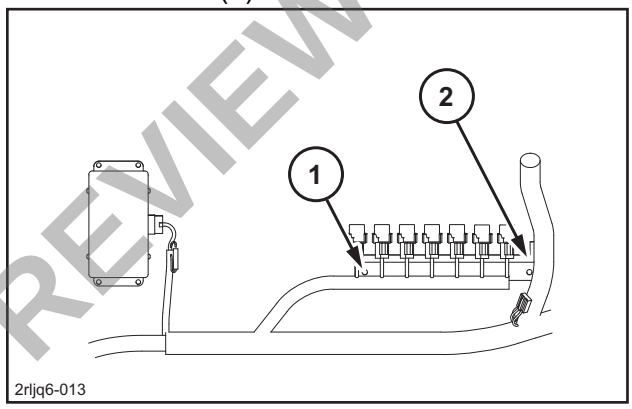

14. Remove the connector (1).

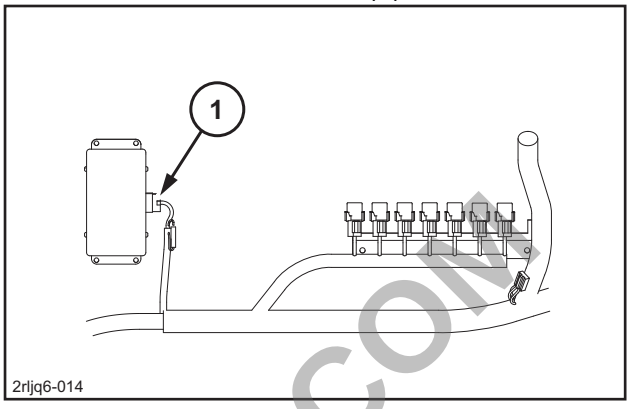

15. Remove the 4 connectors (1) and the 2 wire bands (2).

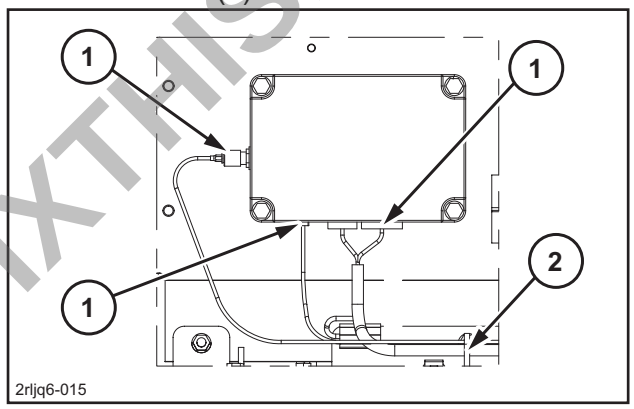

16. Remove the 4 caps (1) from the top of the cab.

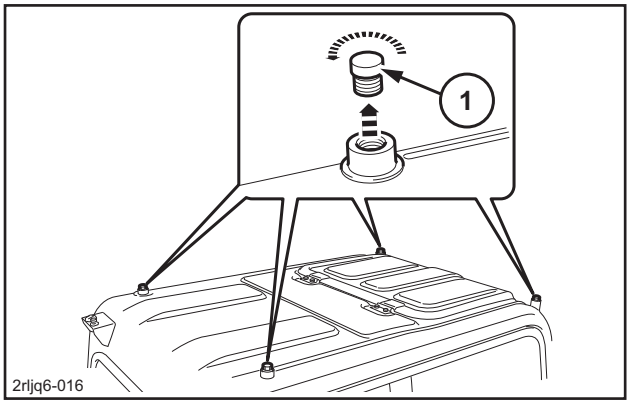

17. Install the 4 eyebolts (M24) (1) in place of the removed caps.
    - Fully tighten the eyebolts, and then loosen them by a half turn.

PREVIEW - YOUFIXTHIS.COM

Download full manual at youfixthis.com

Other

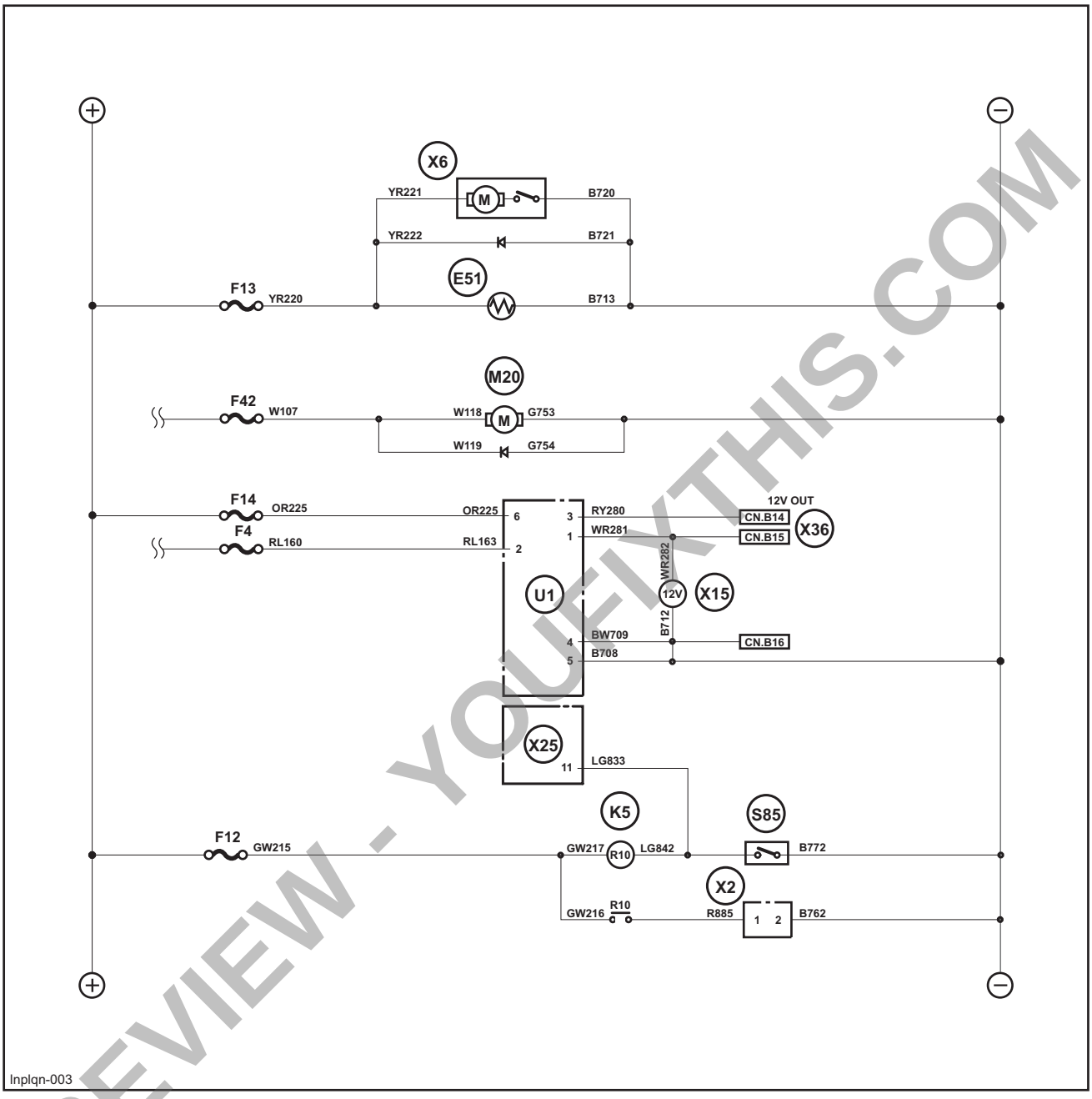

Electrical Symbol List

Symbol	Name	Symbol	Name
 spb17f-136	Fuse	 spb17f-148	Variable solenoid valve
 spb17f-137	Diode	 spb17f-149	Resistor

PREVIEW - YOUFIXTHIS.COM

Download full manual at youfixthis.com

When blow mode is determined by the temperature control switch, the control unit reads in the potentio-meter position in the actuator and determines whether the motor turns forward or in reverse. The contacts move linked with the motor. When the contacts move open or the control unit output signal goes OFF, the motor stops.

Evaporator Sensor

In order to prevent the evaporator from freezing, the evaporator blow temperature is detected and the compressor ON/OFF is controlled.

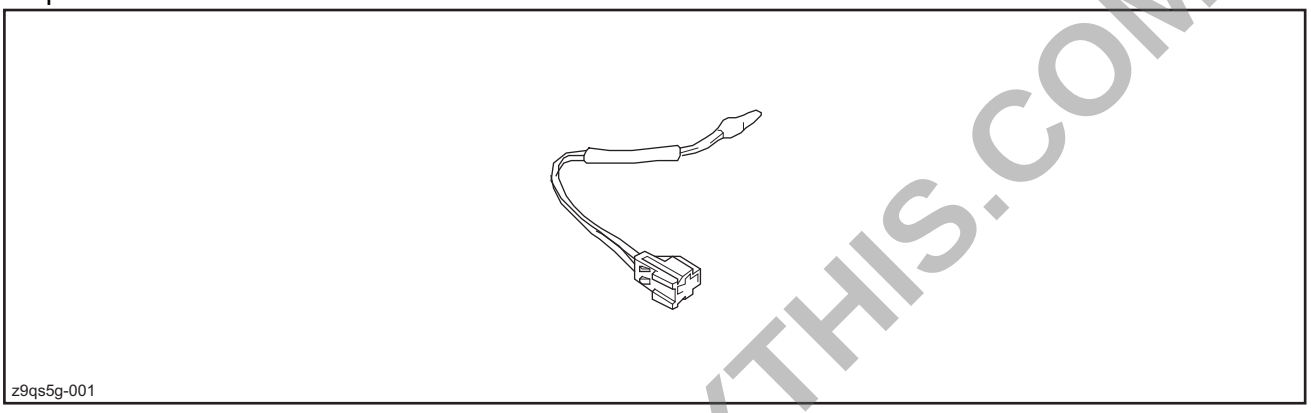
z9qs5g-001

- Evaporator sensor inspection method (specifications value)
  Disconnect the evaporator sensor from the main harness and measure the resistance between the sensor side connector terminals using the tester.

Resistance between terminals	When the sensor section detection temperature is 32.0 °F	:	7.2 kΩ
	When the sensor section detection temperature is 77.0 °F	:	2.2 kΩ

Dual Pressure Switch

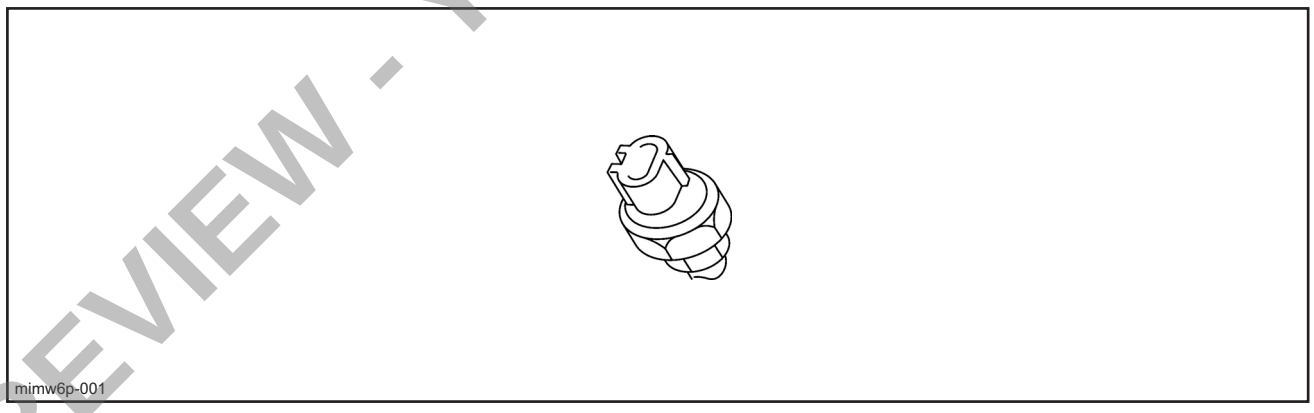
mimw6p-001

- The dual pressure switch is installed on the receiver dryer.
  When there is pressure trouble in the coolant high-pressure side line (abnormally high pressure or abnormally low pressure), the dual pressure switch contacts open up to cut off the compressor power and protect the cooling cycle.

PREVIEW - YOUFIXTHIS.COM

Download full manual at youfixthis.com

Installation of Bucket Link

1. Clean each pin and pin hole.

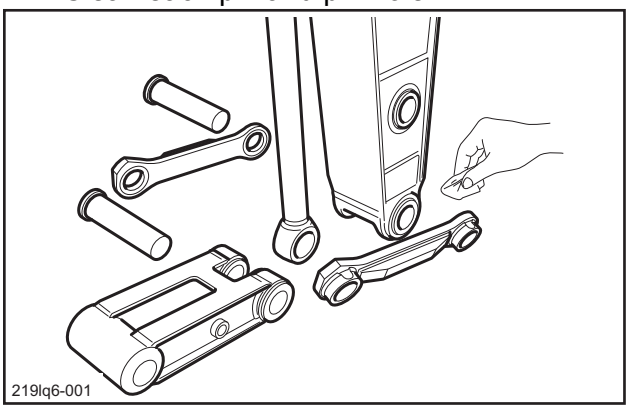

2. Use a hammer (4) to push in the pin (1) and install the arm links (2) (3).
   - If a pin is hard to insert, there is a load on the pin.
   - When inserting the pin, be careful not to damage the installed O-rings or dust seals.

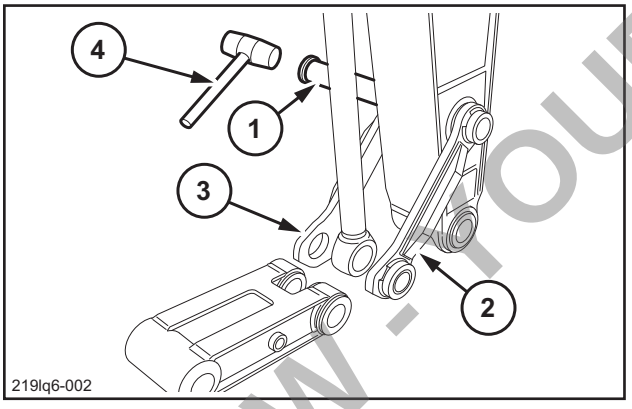

3. Place the bucket link (1) parallel to the ground.
   Use a hammer (3) to push in the pin (2) and install the bucket link (1).

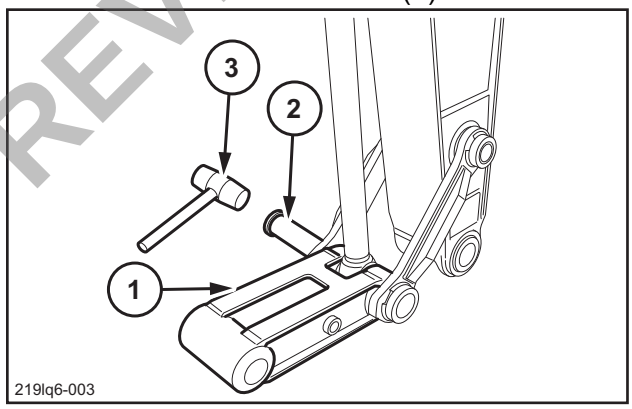

4. Use 2 wrenches [36 mm (1.417 in)] to attach the double nuts (1), and then install the bolts (2) (3).
   - When installing the pin bolts, leave about 0.039 - 0.078 in of gap between both nuts and the retaining ring.
   - Grease up.
   - Install the bucket. (For details, see "Removal and Installation of Bucket".)

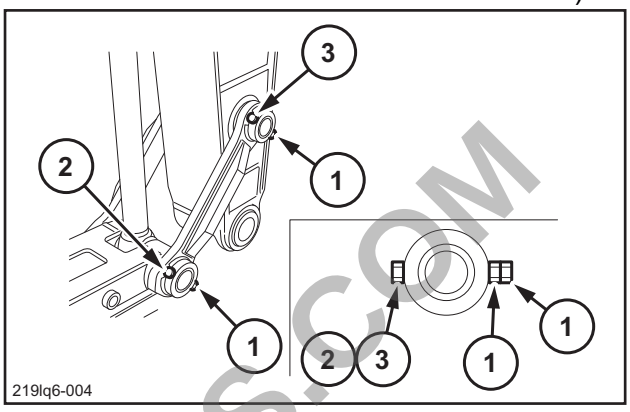

PREVIEW - YOUFIXTHIS.COM

Download full manual at youfixthis.com

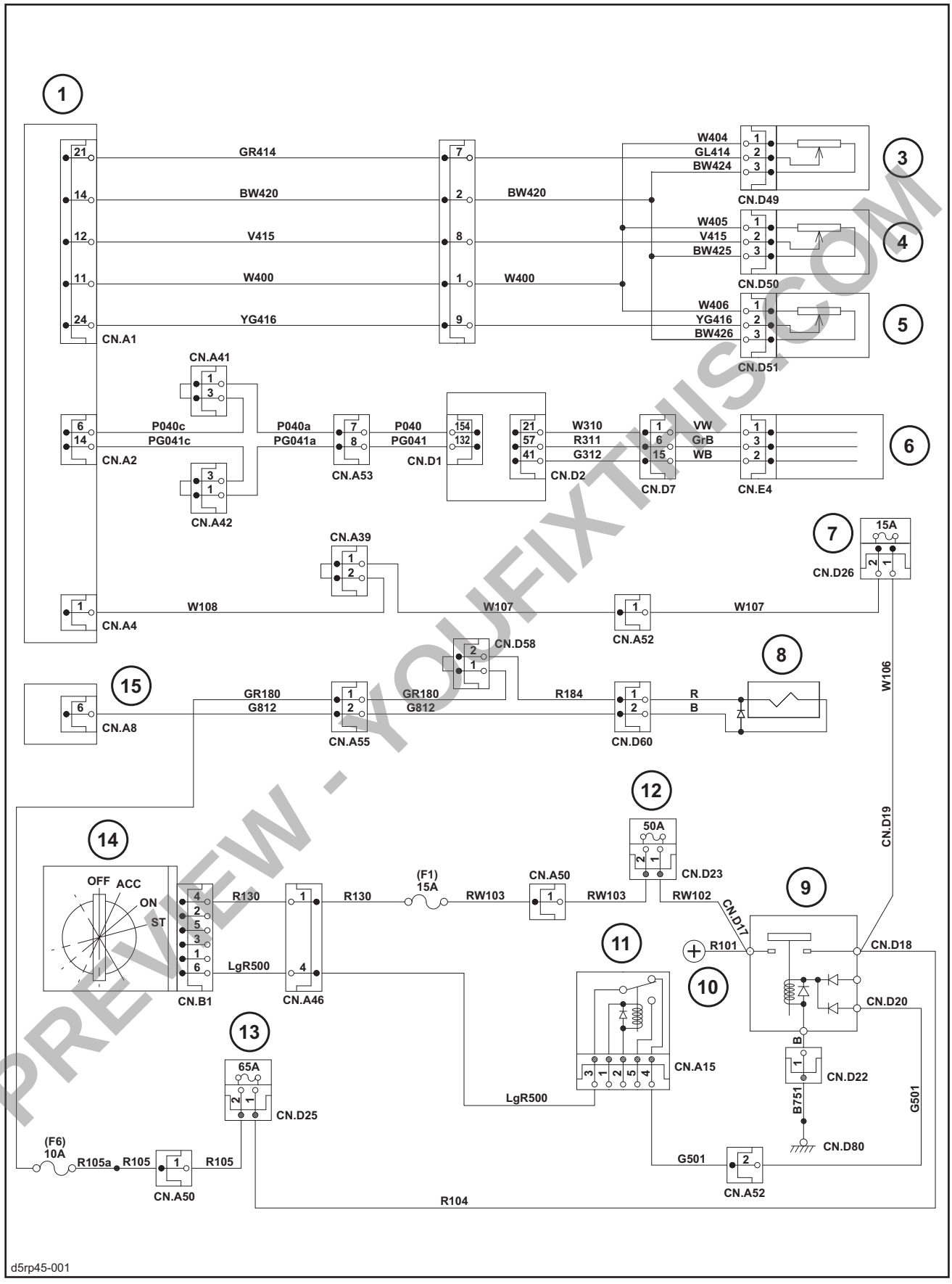

PREVIEW - YOUFIXTHIS.COM

d5rp45-001

Download full manual at youfixthis.com

PREVIEW ONLY

You're viewing 25 of 1309 pages

The full manual includes:

- All 1309 pages, complete
- Searchable PDF (find any keyword)
- No watermarks
- Instant download
- Print-ready quality

GET FULL MANUAL NOW

Link-Belt 350X3 Service Manual

Scan or click anywhere
youfixthis.com

Click anywhere on this page to get the full manual