5 1, LOWER MECHANISM

Removal and Installation

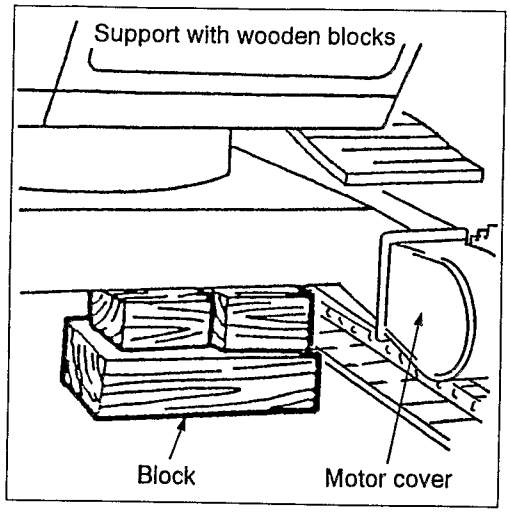

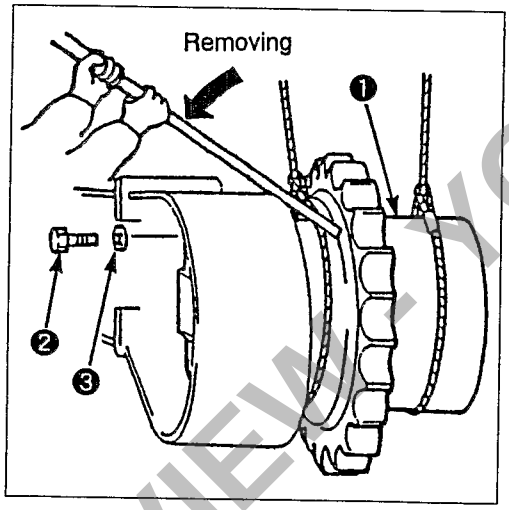

Bolt Tightening Order

• After tightening the 4 bolts in order as in the figure, tighten the other bolts in the same criss-cross pattern.

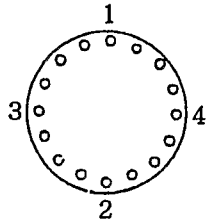

Removal Procedures

1 Remove the track shoe (Refer to the track shoe removal)
2 Raise one side of the lower frame about 8" (20 cm) (Raise high enough to permit drive sprocket removal)
3 Put wooden blocks under the lower frame
4 Stop the engine and operate the control lever to relieve pressure in the hydraulic system (Refer to 05 Precautions for hydraulic oil pressure release)
5 Remove the motor cover
6 Attach identification tag to the traction motor hose for reconnection purposes
7 Disconnect the hoses and install blind caps or plugs to prevent contamination
8 Fasten slings to traction equipment Note Lift only until the wire rope becomes tight.
9 Remove the traction equipment installation bolts ❷
10 Use a steel bar to remove the traction equipment

Installation Procedures

1 Lift the traction equipment and align it to the installation position of the frame
2. Apply Loctite #262 to the thread of travel equipment installation bolts ❷ and tighten snugly
3 Tighten the bolts to the standard torque using a criss-cross pattern
4 Connect the hoses to the travel motor
5 Check the gear oil level in the reduction gear and refill as required
6. Bleed air from the travel motor (Fill motor with hydraulic oil)
7 Remove the wooden blocks.
8. Place the lower frame on the track shoe
9. Install the track shoe (Refer to track shoe installation)
10 Check for oil leakage Repair if leakage is found
11 Install the motor cover

PREVIEW - YOUFIXTHIS.COM

Download full manual at youfixthis.com

0 6, STANDARD TORQUE SPECIFICATIONS

1. Tightening of Bolts, Nuts



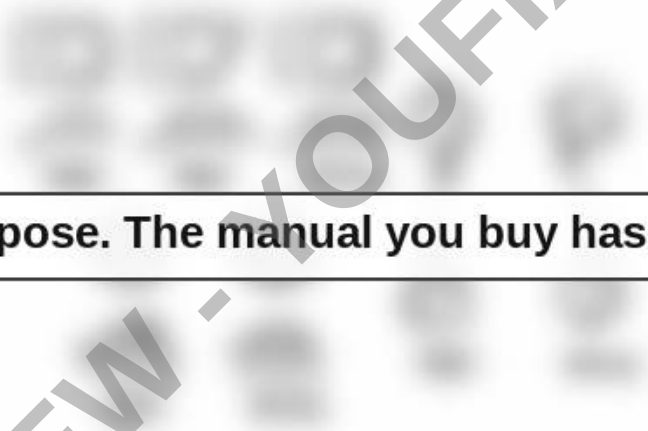

Blurred on purpose. The manual you buy has this page in full quality.

PREVIEW - YOUFIXTHIS.COM

Download full manual at youfixthis.com

	ポート名 PORT NAME	ポートサイズ PORT SIZE
$A_{1,2}$	吐出ポート DELIVERY PORT	SAE6000 3/4"
B_1	吸入ポート SUCTION PORT	SAE2500 2 1/2"
D_r	ドレンポート DRAIN PORT	G 3/4-20
$P_{11,2}$	パイロットポート PILOT PORT	G 1/4-15
$P_{m1,2}$	最大流量カットポート Q_{m} CUT PORT	G 1/4-15
P_{SV}	サーボアシストポート SERVO ASSIST PORT	G 1/4-15



6. Outline, Structural and Development Elevation Diagrams

PREVIEW - YOUFIXTHIS.COM

Blurred on purpose. The manual you buy has this page in full quality.

Download full manual at youfixthis.com

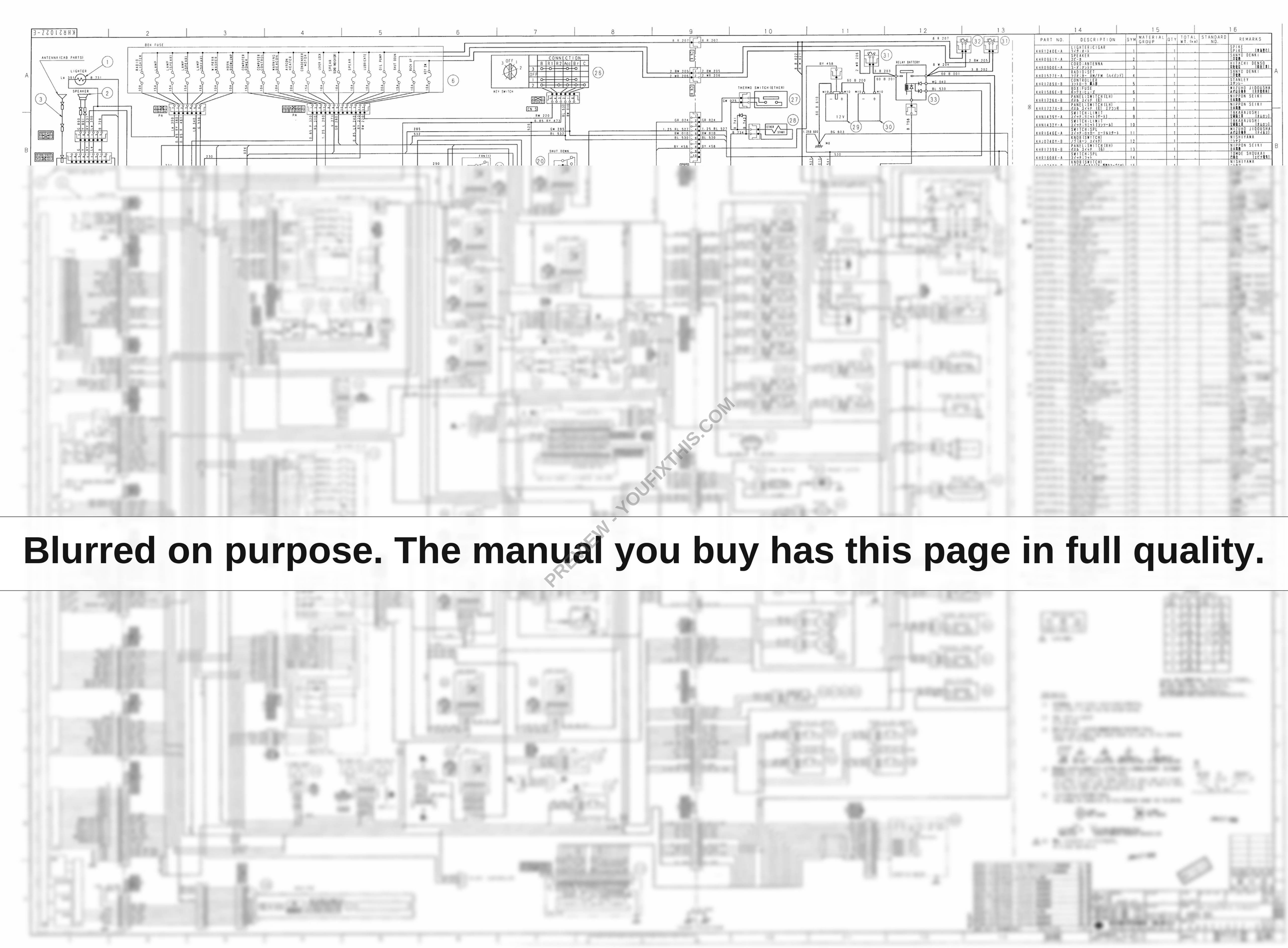

PART NO.	DESCRIPTION	SYM	MATERIAL GROUP	QTY	TOTAL WT. (kg)	STANDARD NO.	REMARKS
KHR1240E-A	LIGHTER:CIGAR ライタ:ホート	1		1			SPIKE SPIKE [ホルダ付]
KHR0951Y-A	SPEAKER スピーカ	2		1			SANYO DENKI 三洋電機
KHR0900E-A	CORD:ANTENNA コード:アンテナ	3		1			HITACHI DENSO 日本電機 [ホルダ付]
KHR1527E-A	RADIO:SET ラジオ:カー AM/FM (ハイパンド)	4		1			SANYO DENKI 三洋電機
KHR1789X-B	CONTROLLER コントローラ 三洋電機	5		1			STANLEY スタンレー
KHR1586E-B	BOX:FUSE ヒューズ・ヒューズ	6		1			MIZUHO JIDOUSHA 水冶自動車 [ホルダ付]
KHR1726X-B	PANEL:SWITCH(LH) パネル スイッチ (E)	7		1			NIPPON SEIKI 日本精機
KHR1727X-B	PANEL:SWITCH(LH) パネル スイッチ (E) エアコンR	8		1			NIPPON SEIKI 日本精機
KHN1439Y-A	SWITCH:LIMIT スイッチ:リミット(ゲート)	9		1			TAKARAJUSHI 宝樹工業 [ホルダ付]
KHN1432Y-A	SWITCH:LIMIT スイッチ:リミット(コンソール)	10		1			TAKARAJUSHI 宝樹工業 [ホルダ付]
KHR1646E-A	SWITCH:SPL スイッチ:ロッカー エーテルスタート	11		1			MIZUHO JIDOUSHA 水冶自動車 [ナイルス]
KHJ0740Y-B	KNOB(SWITCH) ノブ(スイッチ)	12		1			NISHIYAMA ニシヤマ
KHR1739X-B	PANEL:SWITCH(RH) パネル スイッチ (G)	13		1			NIPPON SEIKI 日本精機
KHR1608E-A	SWITCH:SPL スイッチ:ラット	14		1			TOMOE SHOUKAI 巴商会 [スピナ電気]
[illegible]	KNOB(SWITCH) [illegible]	15		1			NISHIYAMA ニシヤマ

PREVIEW - YOUFIXTHIS.COM

Blurred on purpose. The manual you buy has this page in full quality.

Download full manual at youfixthis.com

7 2, TRAVEL MECHANISM

1) Motor Assembly

Parts List

ITEM NO	DESCRIPTION	QTY	REMARKS
203	HOLDER C S/A	1	
–1	HOLDER C	1	
–2	GEAR, PLANETARY	4	
–3	ROLLER	72	
–4	SHAFT, GEAR C	4	
–5	BUSHING, FLOATING	4	
–7	WASHER, THRUST	8	
–8	PIN, SPRING	8	
204	GEAR, DRIVE	4	
205	PLATE, THRUST	1	
206	GEAR, SUN B	1	
207	RING, SNAP	1	
208	GEAR, SUN C	1	
209	RING, SNAP	1	VR115 (NTN)
210	FLANGE	1	
211	SEAL, FLOATING	1	
212	BEARING, ANGULAR	2	
213	HOUSINIG	1	
214	SHIM	1	T=0 039"
214	SHIM	1	T=0 020"
214	SHIM	1	T=0 012"
214	SHIM	1	T=0 004"
214	SHIM	1	T=0 0002"
215	PIN	4	
216	BOLT HEX SOC HD	4	JIS B 1176, M18=90L
217	BOLT HEX SOC HD	16	JIS B 1176, M18=50L
218	PLATE	4	
219	GEAR, RING	1	
220	O-RING	1	
221	BOLT HEX SOC HD	24	JIS B 1176, M14=95L
222	PIN	3	
223	PLATE, THRUST	1	T=0 071"
223	PLATE, THRUST	1	T=0 091"
223	PLATE, THRUST	1	T=0 110"
223	PLATE, THRUST	1	T=0 118"
223	PLATE, THRUST	1	T=0 126"
224	COVER	1	
225	BOLT HEX SOC HD	16	JIS B 1176, M10=20L
226	PLUG	2	PT 3/4
227	PLUG	2	PT 1/4
229	COVER	1	
230	O-RING	1	AS568-270, WG48, HS70
231	BOLT, SCH	3	JIS B 1176, M12 • 60L
232	PLUG	1	PT1/8
300	BOLT HEX SOC HD	4	JIS B 1176, M12=90L
400	PLATE, NAME	1	
500	SCREW, DRIVE	2	1 85 4 8L
600	COUPLING ASSY	1	
601	COUPRING	1	
602	PIN, SPRING	1	JIS B 2808, 6•50L
700	PLUG, SHIPPING	1	
800	PLUG,SHIPPING	2	
	SEAL KIT MOTOR		
	SEAL KIT GEAR BOX		
	BLOCK CYLINDER KIT		
	PLATE RETAINER KIT		
	SHIM KIT		
	PLATE THRUST KIT		

ITEM NO	DESCRIPTION	QTY	REMARKS
–16	GUIDE, SPRING	1	
–17	PLUG	1	
–19	PLUG	5	PT1/4
–22	ORIFICE	2	
–23	ORIFICE	2	
–24	PLUG	1	PT3/8
103	SHAFT	1	
104	BLOCK, CYLINDER	1	
105	PLATE, VALVE	1	
106	PISTON ASSY	9	
107	PLATE, RETAINER	1	
10	HOLDER, RETAINER	1	
109	PLATE, SWASH	1	
110	BALL, STEEL	2	
111	PISTON ASSY	2	
112	BEARING, BALL	1	
113	BEARING, BALL	1	
114	RING, SNAP	1	
115	SEAT, SPRING	1	
116	SPING	1	
117	COLLAR	1	
118	PIN	1	
119	PIN	3	
120	BOLT HEX SOC HD	13	JIS B 1176, M12=60L
121	SEAL, OIL	1	
122	O-RING	1	AS568-288, HS70
123	O-RING	1	AS568-266, HS90
125	PISTON, BRAKE	1	
126	PLATE, FRICTION	3	
127	DISC, PLATE	3	
128	PIN	4	
129	SPRING	8	
130	D-RING	1	
131	D-RING	1	
133	O-RING	4	JIS B 2401, 1B, P7
134	PLUG	5	NPTF 1/16
135	ORIFICE	1	M5 0 8 L 0 8•5L
136	O-RING	2	JIS B 2401, 1B, P18
137	PLUG	2	PF1/2
139	SPRING	2	
141	SPRING	8	
200	GEAR, BOX	1	RGC-170VP
201	HOLDER A S/A	1	
–1	HOLDER A	1	
–2	GEAR, PLANETARY	3	
–3	BEARING, NEEDLE	3	
–4	SHAFT, GEAR A	3	
–5	WASHER, THRUST	6	
–6	PIN, SPRING	3	JIS B 2808, 5•25L
202	HOLDER B S/A	1	
–1	HOLDER B	1	
–2	GEAR, PLANETARY	3	
–3	ROLLER	45	
–4	SHAFT, GEAR B	3	
–5	WASHER, THRUST	6	
–6	PIN, SPRING	3	JIS B 2808, 5•25L

ITEM NO	DESCRIPTION	QTY	REMARKS
100	MOTOR, AXIAL PIS	1	MSF–170VP–3
101	CASE	1	
102	PLATE ASSY, BASE	1	
–1	PLATE, BASE	1	
–2	PLUNGER ASSY	1	
–2–1	PLUNGER	1	
–2–2	VALVE, CHECK	2	
–2–3	SPRING	2	
–2–4	PLUG	2	
–2–5	O-RING	2	JIS B 2401, 1B, P21
–3	SEAT, SPRING	2	
–4	SPRING	2	
–5	SEAT, SPRING	2	
–6	CAP ASSY	2	
–6–1	CAP	1	
–6–2	PISTON S/A	1	
–6–2–1	PISTON	1	
–6–2–2	GUIDE, SPRING	1	
–6–2–3	BALL, STEEL	1	
–6–2–4	SPRING	1	
–6–3	SPRING	1	
–6–4	O-RING	1	JIS B 2401, 1B, G45
–6–5	BOLT HEX SOC HD	4	JIS B 1176, M12=40L
–7	VALVE ASSY, RELIEF	2	
–7–1	HOUSING, RELIEF	1	
–7–2	POPPET	1	
–7–3	SEAT, POPPET	1	
–7–4	SEAT, SPRING	1	
–7–5	SPRING	1	
–7–6	PLUG	1	
–7–7	O-RING	1	AS568-916 HS90
–7–9	PISTON, FREE	1	
–7–10	O-RING	1	JIS B 2401, 1B, P21
–7–11	RING, BACK-UP	2	JIS B 2407, P21, T3
–7–13	GUIDE, SPRING	1	
–7–14	O-RING	1	JIS B 2401, 1B, P12 5
–7–15	SCREW, SET	1	
–7–16	NUT	1	JIS B 1181, M12
–7–17	O-RING	1	JIS B 2401, 1B, P15
–7–18	RING, BACK-UP	2	JIS B 2407, P15, T2
–8	PLUG	10	NPTF 1/16
–9	VALVE ASSY	1	
–9–1	SPOOL A	1	
–9–2	SPOOL C	1	
–9–3	FILTER	1	
–9–4	O-RING	1	JIS B 2401, 1B, P6
–9–5	O-RING	1	JIS B 2401, 1B, P5
–9–6	RING, BACK-UP	1	JIS B 2407, P5, T2
–9–7	RING, BACK-UP	1	JIS B 2407, P5, T2
–9–8	RING, SNAP	1	JIS B 2304, 11 HOLE
–13	SPRING	1	
–14	PLUG	1	PF1/2
–15	O-RING	2	JIS B 2401, 1B, P18

PREVIEW - YOUFIXTHIS.COM

Download full manual at youfixthis.com

01, SHOP MANUAL CONTENTS

		Date
0, EXPLANATION		
0 1,	Contents	97 12
0 2,	Safety	97 12
0 3,	Introduction	97. 12
0 4,	Symbols Used	97. 12
0 5,	Precautions	97 12
0 6,	Standard Torque Specifications	97. 12
0 7,	Numerical Value Conversion Table	97 12
1, GENERAL (Material for special course)		
	(Refer to Separate Service Text)	
2, SPECIFICATIONS		
2 1,	Major Equipment Specifications	97. 12
2 2,	Filters, Fluids and Lubricants	97 12
3, PERFORMANCE		
3 1,	Main Body Weight	97 12
3 2,	New Machine Performance Check List	
3 3,	Suspension Performance	97 12
4, NUMBER NOT USED		
5, MAIN BODY DISASSEMBLY AND SERVICING PROCEDURES		
5 1,	Lower Mechanism	97. 12
5 2,	Upper Mechanism	
5 3,	Attachment	97 12
5 4,	Maintenance Standards	97. 12
6, MAJOR COMPONENTS DISASSEMBLY AND SERVICING PROCEDURES		
6 1,	Tightening Torque for Major Parts	97. 12
6 2,	Take-Up Roller	97. 12
6 3,	Recoil Spring	97 12
6 4,	Upper Roller	97 12
6 5,	Lower Roller	97. 12
6 6,	Rotating Joint	97 12
7, MAJOR HYDRAULIC COMPONENTS DISASSEMBLY AND SERVICING PROCEDURES		
7 1,	Hydraulic Pump	97 12
7 2,	Travel Equipment	97. 12
7 3,	Swing Equipment	97. 12
7 4,	Control Valve	97. 12
7 5,	Hydraulic Cylinder	97 12
7 6,	Remote Control Valve	97. 12
7 5,	Valve	97 12

PREVIEW - YOUFIXTHIS.COM

Download full manual at youfixthis.com

02, SAFETY

Areas marked with ⚠ are especially important regarding safety. Read and understand well before beginning work.

1 When doing servicing work, first read the data (Operator's Manual, Service Text) and understand the contents well before beginning work

2 When assembling or disassembling, take sufficient safety measures to prevent accidents such as falling loads, becoming pinned, fire, etc (When doing servicing underneath the machine, block the machine with blocking, etc to prevent getting pinned by the machine

3 When suspending loads with a crane, a licensed operator should do the work
① The crane operator and workman who does the rigging should be licensed to do so
② Rigging must be inspected

4 When conducting inspection or servicing, wear clothing suitable for the job and also wear protective gear according to the nature of the work
(Safety shoes, helmet, safety glasses, gloves, ear plugs, dust mask, etc)

5 Pay attention Keep a clean, orderly work area to prevent slips or falls

6 When conducting inspection or servicing inside, provide proper ventilation

7 Be prepared for any emergencies and take adequate fire-preventative measures

PREVIEW - YOUFIXTHIS.COM
Download full manual at youfixthis.com

PREVIEW - YOUFIXTHIS.COM

Download full manual at youfixthis.com

0 7, NUMERICAL VALUE CONVERSION TABLE

AREA

SQUARE INCHES TO SQUARE CENTIMETERS

in²	0	1	2	3	4	5	6	7	8	9	in²
	cm²	cm²	cm²	cm²	cm²	cm²	cm²	cm²	cm²	cm²	
—		6 452	12.903	19 355	25 806	32.258	38.710	45 161	51.613	58 064	—
10	64.516	70.968	77.419	83.871	90.322	96.774	103.226	109.677	116 129	122 580	10
20	129.032	135.484	141.935	148.387	154.838	161.290	167.742	174.193	180.645	187.096	20
30	193.548	200 000	206.451	212.903	219.354	225.806	232.258	238.709	245 161	251 612	30
40	258 064	264.516	270 967	277.419	283.870	290 322	296 774	303.225	309.677	316 128	40
50	322 580	329 032	335 483	341.935	348 386	354.838	361.290	367.741	374.193	380.644	50
60	387.096	393.548	399 999	406.451	412 902	419.354	425.806	432.257	438 709	445 160	60
70	451 612	458 064	464 515	470.967	477 418	483.870	490 322	496 773	503.225	509.676	70
80	516.128	522 580	529 031	535 483	541 934	548.386	554.838	561 289	567 741	574.192	80
90	580.644	587.096	593 547	599.999	606.450	612.902	619.354	625.805	632.257	638.708	90
100	645.160	651 612	658.063	664.515	670 966	677.418	683.870	690.312	696.773	703 224	100

SQUARE CENTIMETERS TO SQUARE INCHES

cm²	0	1	2	3	4	5	6	7	8	9	cm²
	in²	in²	in²	in²	in²	in²	in²	in²	in²	in²	
—		0 155	0 310	0.465	0.620	0.775	0 930	1.085	1.240	1 395	—
10	1 550	1.705	1.860	2.015	2 170	2 325	2.480	2.635	2 790	2.945	10
20	3 100	3.255	3.410	3 565	3.720	3 875	4 030	4 185	4 340	4 495	20
30	4 650	4.805	4 960	5.115	5.270	5 425	5 580	5.735	5 890	6 045	30
40	6.200	6.355	6 510	6 665	6 820	6.975	7 130	7 285	7 440	7 595	40
50	7.750	7 905	8.060	8 215	8 370	8 525	8.680	8 835	8 990	9.145	50
60	9 300	9 455	9 610	9.765	9 920	10 075	10 230	10.385	10.540	10 695	60
70	10 850	11.005	11.160	11.315	11.470	11.625	11.780	11.935	12.090	12.245	70
80	12.400	12.555	12.710	12.865	13 020	13.175	13 330	13 485	13 640	13.795	80
90	13 950	14.105	14.260	14.415	14 570	14.725	14.880	15.035	15.190	15.345	90
100	15.500	15.655	15 810	15.965	16.120	16.275	16.430	16.583	16 740	16 895	100

VOLUME

CUBIC INCHES TO CUBIC CENTIMETERS

in³	0	1	2	3	4	5	6	7	8	9	in³
	cm³(cc)	cm³(cc)	cm³(cc)	cm³(cc)	cm³(cc)	cm³(cc)	cm³(cc)	cm³(cc)	cm³(cc)	cm³(cc)	
—		16 387	32.774	49.161	65 548	81 935	98 322	114.709	131.097	147 484	—
10	163 871	180 258	196 645	213.032	229.419	245.806	262.193	278 580	294 967	311.354	10
20	327.741	344.128	360.515	376.902	393.290	209.677	426 064	442.451	458.838	475 225	20
30	491 612	507 999	524.386	540.773	557 160	573.547	589.934	606.321	622 708	639 095	30
40	655 483	671 870	688 257	704 644	721.031	737 418	753.805	770 192	786.579	802 966	40
50	819 353	835.740	852 127	868.514	884.901	901.289	917 676	934 063	950.450	966.837	50
60	983.224	999.611	1015.998	1032 385	1048.772	1065.159	1081.546	1097.933	1114.320	1130 707	60
70	1147.094	1163 482	1179.869	1196.256	1212.643	1229 030	1245 417	1261 804	1278.191	1294 578	70
80	1310.965	1327 352	1343.739	1360.126	1376 513	1392.900	1409.288	1425.675	1442 062	1458 449	80
90	1474 836	1491.223	1507.610	1523.997	1540.384	1556.771	1573.158	1589 545	1605 932	1622 319	90
100	1638.706	1655 093	1671.481	1687 868	1704 255	1720 642	1737.029	1753 416	1769.803	1786.190	100

CUBIC CENTIMETERS TO CUBIC INCHES

cm³(cc)	0	1	2	3	4	5	6	7	8	9	cm³(cc)
	in³	in³	in³	in³	in³	in³	in³	in³	in³	in³	
—		0.0610	0.1220	0 1831	0.2441	0.3051	0 3661	0 4272	0 4882	0 5492	—
10	0 6102	0.6713	0.7323	0.7933	0.8543	0.9153	0.9764	1 0374	1.0984	1.1594	10
20	1.2205	1 2815	1 3425	1.4035	1.4646	1.5256	1.5866	1.6476	1.7086	1.7697	20
30	1 8307	1.8917	1.9527	2.0138	2.0748	2.1358	2.1968	2 2579	2 1389	2.3799	30
40	2 4409	2 5020	2.5630	2.6240	2.6850	2.7460	2.8071	2 8681	2 9291	2.9901	40
50	3 0512	3 1122	3.1732	3 2342	3 2952	3.3563	3 4173	3 4783	3 5393	3 6004	50
60	3.6614	3.7224	3.7834	3 8444	3.9055	3.9665	4.0275	4 0885	4 1496	4.2106	60
70	4 2716	4 3326	4.3937	4 4547	4 5157	4 5767	4.6377	4 6988	4 7598	4 8208	70
80	4 8818	4 9429	5.0039	5.0649	5.1259	5.1870	5.2480	5.3090	5.3700	5 4310	80
90	5 4921	5.5531	5 6141	5.6751	5 7362	5.7972	5.8582	5.9192	5 9803	6 0413	90
100	6.1023	6 1633	6 2243	6.2854	6.3464	6.4074	6 4684	6.5295	6 5905	6 6515	100

PREVIEW: YOUFIXTHIS.COM

Download full manual at youfixthis.com

PREVIEW - YOUFIXTHIS.COM

Download full manual at youfixthis.com

PREVIEW - YOUFIXTHIS.COM

Download full manual at youfixthis.com

6 1, TIGHTENING TORQUE FOR MAJOR PARTS

Tightening Torque For Major Parts

Machine Type: 3900Q

Purpose: The tightening torque values for the major parts are explained in this section

Note: 1 Use a wrench/tool suitable to the bolt size and tighten to the specified torque

Table of Contents:

1 Tightening of Bolts and Nuts ····· Page 2/5

2 Tightening Torque Table ····· Page 3/5

PREVIEW - YOUFIXTHIS.COM

Download full manual at youfixthis.com

6 5, RECOIL SPRING

1. Structural Diagram

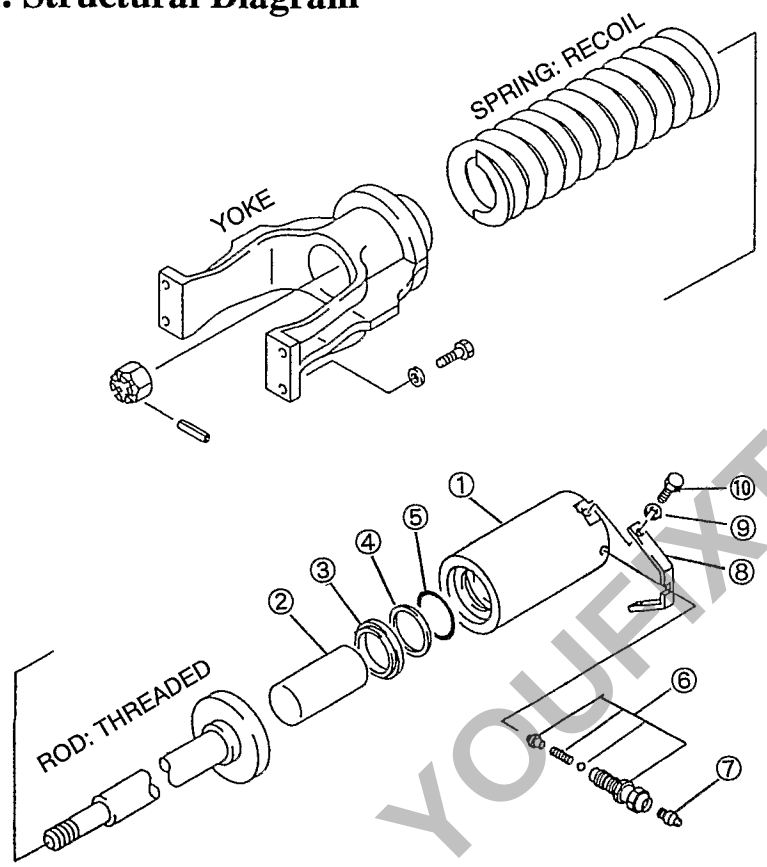

Item	Part Name
1	Grease cylinder
2	Piston rod
3	Dust seal
4	Back-up ring
5	O-ring
6	Check valve
7	Grease nipple
8	Bracket
9	Spring washer
10	High strength bolt

2. Tools and Jigs

① Tools

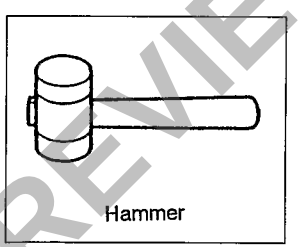

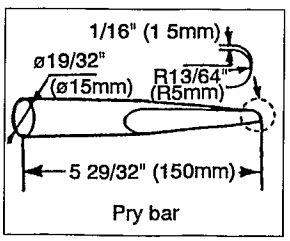

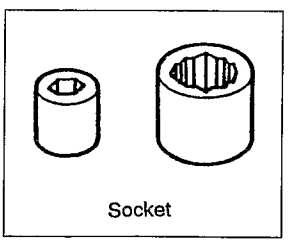

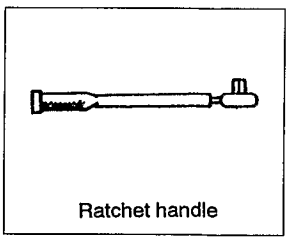

② Jigs

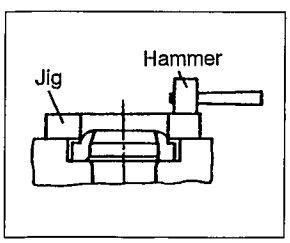

PREVIEW - YOUFIXTHIS.COM

Download full manual at youfixthis.com

3-1-2 Flow Increase Operation

When the pilot pressure Pi decreases, the pilot piston (643) moves to the left by the pilot spring (646) force, and lever 2 (613) rotates around point B The pin (874) is pressed into the larger hole of lever 2 [C part] by the return spring (654) through the spool (652), pin (874) and feedback lever (611), so the feedback lever rotates around point D along with lever 2's movement and the spool moves to the left

When the spool moves, C ℓ port opens to the tank port so the pressure in the servo piston large diameter part is lost and the servo piston moves to the left by the delivery pressure P_1 of the small diameter part and increases the flow rate

Along with the servo piston movement, point D also moves to the left and the feedback lever rotates around point C and the spool moves to the right Operation is continued until the spool sleeve opening is closed and stops when completely closed

3-2 Horsepower Control

As illustrated to the right, when the load pressure increases, the pump tilting angle is reduced thereby preventing overload of the prime mover.

The regulator has a simultaneous set horsepower control system, so the tilting angle (displacement capacity) of the two pumps as shown in the equation is controlled to the same value

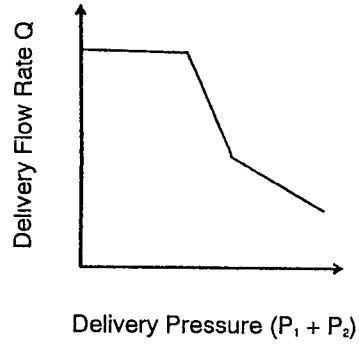

$$Tin = P_1 \times \frac{q}{2\pi} + P_2 \times \frac{q}{2\pi} = (P_1 + P_2) \times \frac{q}{2\pi}$$

Horsepower control operation is the same as that for flow rate control and will be explained below

[Regarding detailed movement of each part, refer to the page on flow rate control.]

PREVIEW - YOUFIXTHIS.COM

Download full manual at youfixthis.com

PREVIEW - YOUFIXTHIS.COM

Download full manual at youfixthis.com

3-4. 2-Speed Mode Changer

(1) 2-Speed Mode Changer Structure

The swash plate has three surfaces, A through C as illustrated in Fig 9, being assembled in a slant state on the motor case with two steel balls

The 2-speed mode change valve is assembled inside the base plate

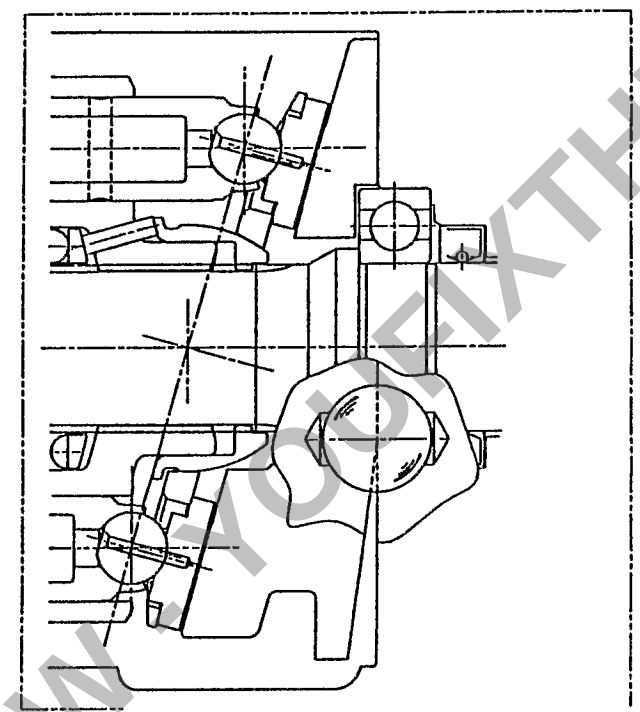

Fig 9 2-Speed Mode Changer Structure

PREVIEW - YOUFIXTHIS.COM

Download full manual at youfixthis.com

7-4. Maintenance Standards

When disassembling the motor, replace the parts according to the following standards.

Carefully handle the parts and take special care for the moving and sliding sections so as not to damage them.

If seals are disassembled once, replace them all even though no damage is observed

Part Name	Appearance	Standard Value	Allowable Value	Replaceable Part
(6) Piston S/A	1 Deeply scarred or rough surface is observed on sliding area	———	———	Cylinder block kit
	2. The clearance to the cylinder block bore is large	0 00118" (0 030mm)	0 00236" (0.060mm)	
	3 Backlash is large in shoe ball section.	0.00591" (0.15mm)	0.01575" (0.4mm)	
(4) Cylinder Block	1 Deeply scarred or rough surface is observed on sliding area.	Roughness 0 2a	No seizure and scar deeper than 0.000787" (0 02mm)	Cylinder block kit Lap (#1000) when scar cannot be completely removed, replace
	2 The inside of the bore is excessively worn.	———	———	
	3 The engaged tooth is worn or broken.	———	———	
(5) Valve Plate	1 Deeply scarred, thermally seized, unevenly worn or rough surface is observed on the sliding area.	Roughness 0 2a	0.8a No seizure and scar deeper than 0.000787" (0 02mm)	Cylinder block kit Lap (#1000) when scar cannot be completely removed, replace.
(7) Retainer Plate (8) Retainer Holder	1 Deeply scarred, thermally seized, unevenly worn or rough surface is observed on the sliding area	Roughness 0.2a	0 8a	Retainer plate kit
(9) Swash Plate	1 Deeply scarred, thermally seized, unevenly worn or rough surface is observed on the sliding area.	Roughness 0 2a	0 8a No seizure and scar deeper than 0.000787" (0.02mm)	Swash plate Steel ball, lap (#1000) when scar cannot be completely removed, replace.
	2 Deeply scarred, thermally seized on the contact area with the (10) steel ball.	Ball depth 0 563" (14 3mm)	Ball depth 0 571" (14.5mm)	Swash plate Steel ball, lap (#1000) when scar cannot be completely removed, replace.

PREVIEW - YOUFIXTHIS.COM

Download full manual at youfixthis.com

Disassembly Procedure	Process Illustration
e) Loosen the socket head bolts (17) and (16) and remove the holder C S/A (3).	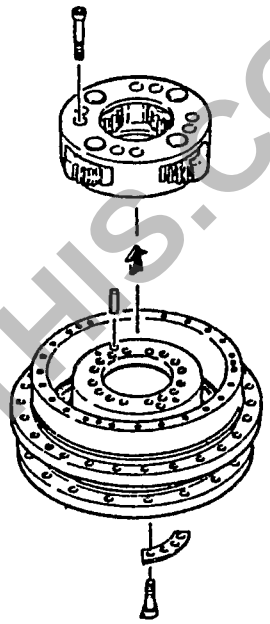
3. Disassembling of holder S/A Knock the spring pins into the gear shaft and disassemble the holder S/A. Holder A (1-6) Spring pin ø13/64" (ø5 mm) (1-4) Gear shaft A Holder B (2-6) Spring pin ø13/64" (ø5 mm) (2-4) Gear shaft B Holder C (3-8) Spring pin ø13/64" (ø5 mm) (3-4) Gear shaft C ※ Be careful not to knock the pin in too far. Use of the spring pin knocking jig eases the work.	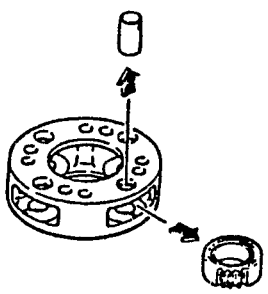

PREVIEW - YOUFIXTHIS.COM

Download full manual at youfixthis.com

6-3. Filling with Gear Oil

Insert the plug ㉖ with an Allen key and torque 29.5 ft lbs (40N·m) Fill with gear oil through the filler port (refer to external drawing).

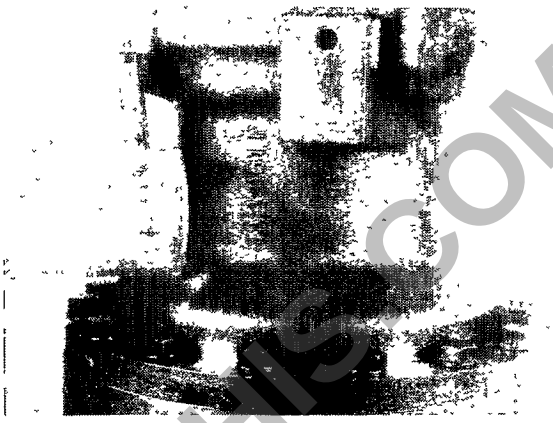

The type and volume of oil is given in 4-2.

6-4. Grease Up

Apply grease as described in 4-2.

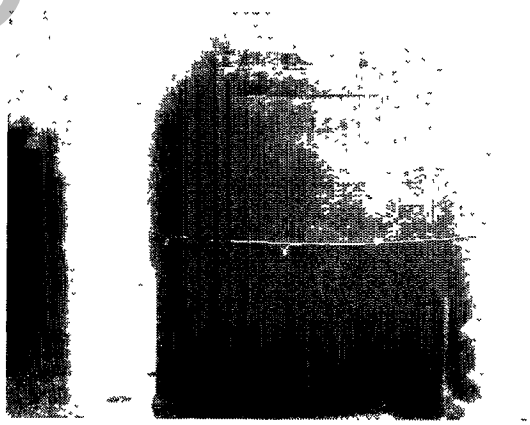

PREVIEW - YOUFIXTHIS.COM

Download full manual at youfixthis.com

4-20 Final checks after assembling



Open the inlet and outlet ports and apply 426.5 lbs/in² (30kgf/m²) pilot pressure to the brake release port. (Take care as oil is discharged from the drain port) Check that the drive shaft can be rotated smoothly for at least one full revolution by applying a torque of approx 28.9 ft lbs (4 kgf•m).

※ If the shaft does not turn, the unit has not been assembled correctly so disassemble again and inspect

The reassembly is now complete.

PREVIEW - YOUFIXTHIS.COM

Download full manual at youfixthis.com

2-4) Bucket Spool Switch

1) Dump: Crowd (Refer to Fig. 11)

When the pilot port P_{bR3} (P_{aR3}) is pressurized and the bucket I spool is switched the 4-spool neutral passage ⓐ is cut off and the oil delivered from P_R flows through the 4-spool parallel passage ⓑ and pushes up the load check valve [v] and from the passage ⓝ flows through the spool neck and from passage Ⓟ (ⓠ) flows to the cylinder port B_{R3} (A_{R3}).

The return oil from the cylinder port A_{R3} (B_{R3}) flows through the spool neck from passage ⓠ (Ⓟ) and is released to the tank passage

2) II Speed Confluence (Refer to Fig. 11, 12)

When the bucket I spool is switched, (Dump· Crowd: Fig. 11), when pilot port P_{aR4} is pressurized and bucket II is switched (Fig 12), the oil delivered from P_L flows into passage Ⓨ ⓦ from the 5-spool neutral passage Ⓐ and arm I spool land and flow through the bucket II spool hole [u] and pushes up the poppet [t] and converges in bucket I passage ⓝ from passage ⓞ (Fig. 1).

2-5) Swing Spool Switch (Refer to Fig. 11)

When the pilot port P_{bL3} (P_{aL3}) is pressurized and the spool is switched, the 5-spool neutral passage Ⓐ is cut off and the oil delivered from P_L port flows through the 5-spool parallel passage Ⓑ and pushes open the load check valve [s] and flows through the spool neck from passage Ⓟ and flows from passage Ⓡ (Ⓠ) to cylinder port B_{L3} (A_{L3}).

The return oil from cylinder port A_{L3} (B_{L3}) flows through the spool neck and is released to the tank.

2-6) Spare Spool Switch (Refer to Fig. 5)

When the pilot port P_{bL2} (P_{aL2}) is pressurized and the spool is switched, the 5-spool neutral passage Ⓐ is cut off and the oil delivered from the P_L port flows through the 5-spool parallel passage Ⓑ and pushes up the load check [r], and from passage Ⓜ flows through the spool neck and flows through passage ⓞ and flows to cylinder port B_{L2} (A_{L2}) Also, the oil delivered from the outside to the P_5 port flows through the load check valve [r] passage [q] and converges in passage Ⓜ

The return oil from cylinder port A_{L2} (B_{L2}) flows through the spool neck and is returned to the tank.

2-7) Travel Linearity Spool (Refer to Fig. 18)

When the spool of the attachment is switched the signal passage is cut off, but when the travel spool is in neutral the oil for signal is released to the tank at the travel spool signal land [K] [L] so the pressure of the signal passage [f] does not rise and the travel linearity spool is in the neutral condition (Fig. 1)
(When the boom is raised, it is switched to boom II Fig. 8)
Also, when the spool of the attachment is switched the flow to the tank passage of the signal passage [e] is cut off so the P_f port pressure rises
(For the travel linearity spool switching condition, refer to the next item, 3-1 about travel combination operations)

PREVIEW - YOUFIXTHIS.COM

Download full manual at youfixthis.com

7. Installation

- Be careful that excessive force is not put on the valve by the lines
- Tighten the installation bolts evenly.
- When welding work is done near the installation bolts, excessive heat or spatter can damage the seals so be careful.
- To prevent foreign matter from entering the lines, do not remove the plugs from the ports until installation

8. Running

- Operate after confirming that the hydraulic circuit and hydraulic oil are clean.
- Use the hydraulic oil specified in the Operator's Manual
- The oil temperature should not be more than 104°F (40℃) above ambient temperature
- Do not raise the pressure of the main relief valve or port relief valve higher than the rated set pressure.
- The difference between the main relief valve and port relief valve set pressure should be more than 285 psi {2 0 MPa}.
- Warm up sufficiently before beginning actual operations.

  In particular, to prevent sticking due to heat shock of the main spool because of low temperature of the hydraulic oil and valve at starting, be careful of the following points

  1) Do not suddenly operate the main relief valve or port relief valve continuously, but operate so that the hydraulic oil in each actuator can circulate, thereby warming up each part uniformly.
  2) Fine and combination operations cause heating by each part's restriction, so do not perform these operations suddenly, in low temperature.

PREVIEW - YOUFIXTHIS.COM

Download full manual at youfixthis.com

Item	Symptoms	Related Parts	Problems	Treatment
4	4-3 Operation is unsteady	Air	Air remaining inside cylinder	• Bleed the air For cylinder that does not have air bleeder, operate back and forth several times at low pressure and low speed to bleed the air For cylinder with air bleeder, remove the load so that inner pressure does not become high Loosen the air bleeder and completely bleed the air (Note) The cylinder may expand if it is stopped suddenly This is due to the compression of the hydraulic oil This occurs especially with cylinders with a very long stroke
	4-4 Shock large when switching from extend to retract	Pin bushing Pin	Gap between installation part and pin bushing is too large	 Measure the pin and pin bushing and replace parts if measurements exceed the specifications
	4-5 Noise made during cylinder sliding operation	Supply oil	Oil insufficient	• Supply oil
		Pin bushing Pin	Scuffing at connecting part	• Replace with new part and supply with oil

If left in the state where operations are not good, the cylinder will no longer move and other parts will be effected adversely Inspect early and carry out appropriate measures

PREVIEW - YOUFIXTHIS.COM

Download full manual at youfixthis.com

PREVIEW - YOUFIXTHIS.COM

Download full manual at youfixthis.com

PREVIEW ONLY

You're viewing 24 of 624 pages

The full manual includes:

- All 624 pages, complete
- Searchable PDF (find any keyword)
- No watermarks
- Instant download
- Print-ready quality

GET FULL MANUAL NOW

Link-belt 3900Q Shop Manual

Scan or click anywhere
youfixthis.com

Click anywhere on this page to get the full manual