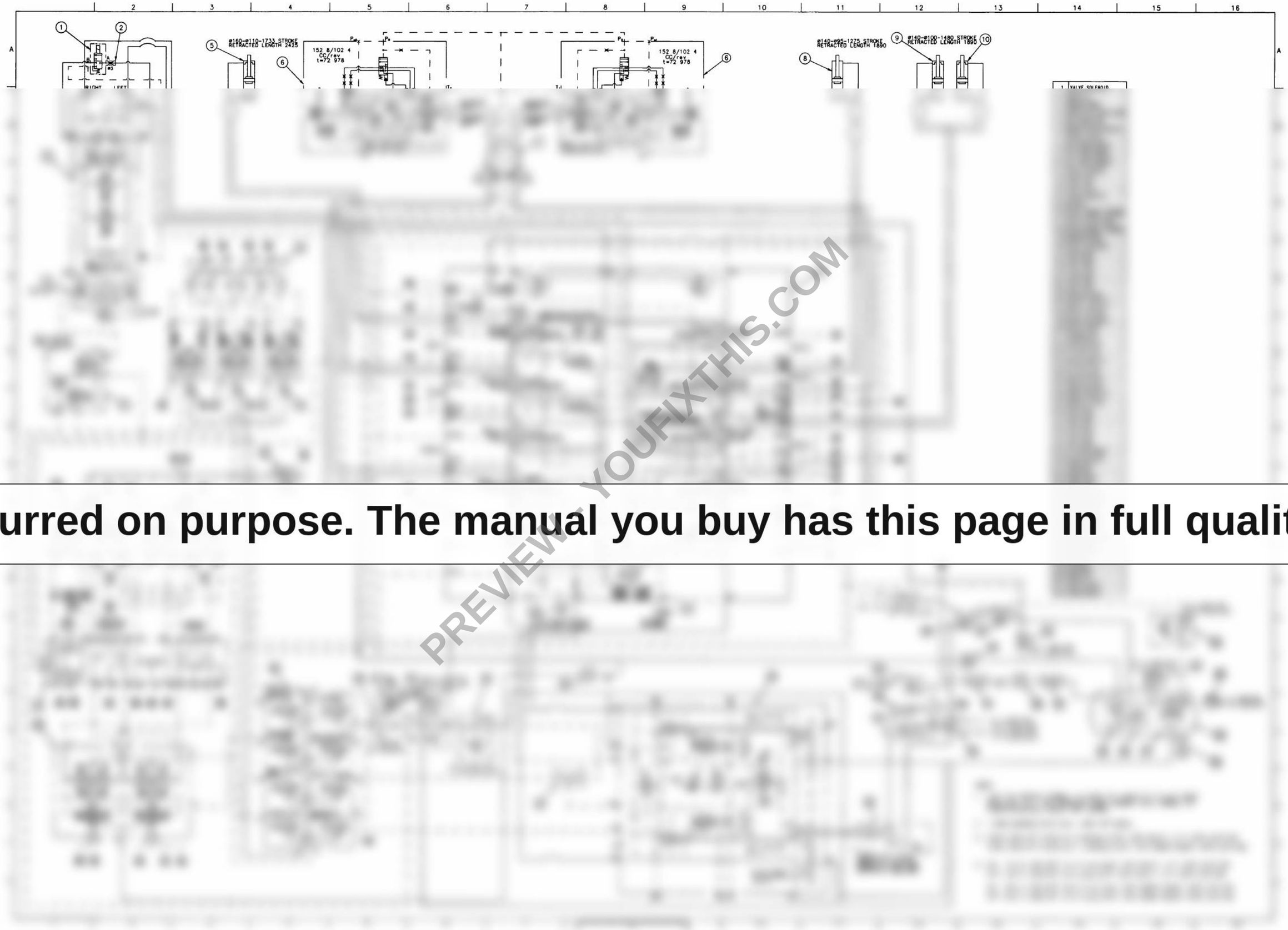

Blurred on purpose. The manual you buy has this page in full quality.

PREVIEW - YOUFIXTHIS.COM

Download full manual at youfixthis.com

27. Loosen the air relief plug located on the hydraulic reservoir to bleed air system pressure.
28. When all air pressure is bleed from both systems, tighten the air relief plug on hydraulic reservoir and close the air tank drain valve.

⚠ WARNING

All trapped hydraulic pressure must be exhausted from the hydraulic circuit before removing any line or component. A sudden release of hot oil could cause burns or other serious injury.

29. Operate the control levers back and forth, left and right, several times to release hydraulic system pressure.
30. Turn the key switch to the "OFF" position.

Travel Motor And Reduction Gears Removal

Refer to Figure 3.

1. Remove capscrews and flatwashers (2).
2. Remove cover plate (3).

⚠ WARNING

Follow all manufacturer's recommendations concerning solvents and cleaning solutions. Serious personal injury may result from misuse of these products.

3. Thoroughly clean area to be worked on with an approved cleaning solvent. Allow to air dry.
4. Label hoses (4) to help facilitate assembly.
5. Disconnect hoses (4). Plug/cap hoses (4) and fittings to prevent oil loss and contamination.
6. Permanently mark travel motor and reduction gears (1) housing and side frame (6) to help facilitate assembly.

   Note: The travel motor and reduction gears (1) and sprocket (7) assembly weighs approximately 950 lb (*430 kg*).

7. Using an auxiliary lifting device of sufficient capacity to support the weight of the travel motor and reduction gears (1) and sprocket (7) assembly, rig a sling around the travel motor and reduction gears (1) and sprocket (7) assembly and remove all the slack.
8. Remove capscrews and flatwashers (5).
9. Remove travel motor and reduction gears (1) and sprocket (7) assembly from side frame (6).
10. Using blocks (9) properly support the travel motor and reduction gears (1) assembly.

    Note: The sprocket (7) weighs approximately 250 lb (*114 kg*).

11. Using an auxiliary lifting device of sufficient capacity to support the weight of the sprocket (7), rig a sling around the sprocket (7) and remove all the slack.
12. Remove capscrews and flatwashers (8).
13. Remove sprocket (7) from travel motor and reduction gears (1) assembly.

Travel Motor And Reduction Gears Installation

Refer to Figure 3.

Note: The travel motor and reduction gears (1) assembly weighs approximately 700 lb (*318 kg*).

1. With an auxiliary lifting device of sufficient capacity to support the weight of the travel motor and reduction gears (1), and using blocks (9) properly support the travel motor and reduction gears (1) assembly.

   Note: The sprocket (7) weighs approximately 250 lb (*114 kg*).

2. Using an auxiliary lifting device of sufficient capacity to support the weight of the sprocket (7), rig a sling around the sprocket (7) and remove all the slack.
3. Install sprocket (7) onto travel motor and reduction gears (1) assembly.
4. Apply Loctite® 262 to capscrews. Install capscrews and flatwashers (8). Torque capscrews to 382–446 ft–lb *(520–605 Nm)*.

   Note: The travel motor and reduction gears (1) and sprocket (7) assembly weighs approximately 950 lb (*430 kg*).

5. Using an auxiliary lifting device of sufficient capacity to support the weight of the travel motor and reduction gears (1) and sprocket (7) assembly, rig a sling around the travel motor and reduction gears (1) and sprocket (7) assembly and remove all the slack.
6. Align marks and install travel motor and reduction gears (1) and sprocket (7) assembly into side frame (6).
7. Apply Loctite® 262 to capscrews. Install capscrews and flatwashers (5). Torque capscrews to 660–770 ft–lb *(300–350 Nm)*.
8. Connect hoses (4) to travel motor and reduction gears (1) assembly.

PREVIEW - YOUFIXTHIS.COM
Download full manual at youfixthis.com

Capscrew Torques

Proper tightening of capscrews, studs and nuts is very important when assembling or installing components

The dry torque column should be used for fasteners as they come from the package, with no lubrication applied to threads.

PREVIEW - YOUFIXTHIS.COM

Blurred on purpose. The manual you buy has this page in full quality.

Download full manual at youfixthis.com

Hydraulic Pump Troubleshooting

Problem	Cause	Check	Remedy
Abnormal noise	1. Air suction due to low hydraulic oil level	1. Check hydraulic oil level	1. Add as required. See Operator's Manual
	2. Suction pressure drop due to clogged filter	2. Check filter element	2. Clean or replace filter element
	3. Suction pressure drop due to increased viscosity of hydraulic oil at low operating temperature	3. Check hydraulic oil operating temperature and oil type	3. Change to proper hydraulic oil temperature and type and properly warm up the hydraulic oil
	4. Input shaft rotation speed abnormally high	4. Check input shaft rotation speed	4. Adjust rotation speed
	5. Bearing, etc. damaged mechanically	• Pressure check for cause of overload	• Reset pressure
		• Measure contamination of hydraulic oil	• Flush the circuit and change hydraulic oil
Insufficient flow amount	1. Input shaft rotation speed decrease	1. Check input shaft rotation speed	1. Adjust rotation speed
	2. Oil temperature too high	2. Check oil temperature	2. Stop operation and recheck after oil temperature has dropped
	3. Viscosity too high	3. Check oil type and temperature	3. Replace with oil of proper viscosity
	4. Switching valve, actuator leakage amount increase	4. Check actuator	4. Replace switching valve and actuator
	5. Pump displacement efficiency decrease	5. Check pump	5. Repair or replace pump
	6. Horsepower setting adjustment screw is loose	6. Check for looseness of adjustment screw and locknut	6. Reset and lock adjustment screw with locknut
	7. Air suction due to low hydraulic oil level	7. Check hydraulic oil level	7. Add as required, see Operator's Manual
	8. Suction pressure drop due to clogged filter	8. Check filter element	8. Clean or replace filter element
	9. Suction pressure drop due to increased viscosity of hydraulic oil at low operating temperature	9. Check hydraulic oil operating temperature and oil type	9. Change to proper hydraulic oil type and properly warm up the hydraulic oil.
	10. External command pressure higher than stipulated value	10. Measure external command pressure	10. Adjust external command pressure
Pressure does not increase	1. Relief valve setting too low	1. Measure circuit pressure	1. Reset relief valve
	2. Switching valve, actuator leakage increase	2. Check actuation of each actuator and abnormal heating of lines returning to tank	2. Replace switching valve, actuator
	3. Pump displacement efficiency decrease	3. Check pump if occurs only in certain pump	3. Repair or replace pump

PREVIEW - YOUFIXTHIS.COM

Download full manual at youfixthis.com

PREVIEW - YOUFIXTHIS.COM

Download full manual at youfixthis.com

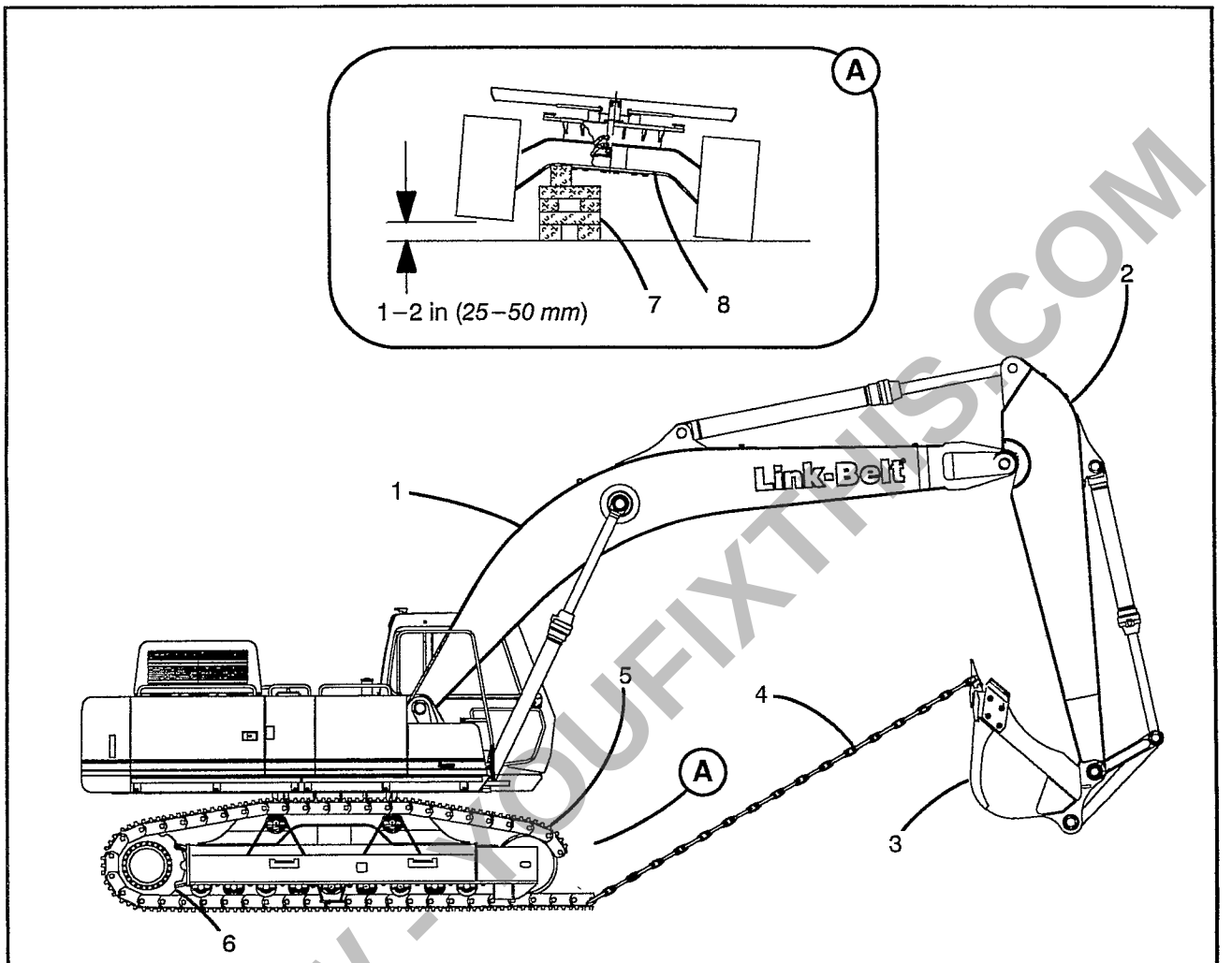

1. Boom
2. Arm
3 Bucket
4 Chain
5. Track
6. Sprocket
7. Supports
8 Lower Frame

Figure 2
Track Assembly

CD01818–C, BD00248–B

Refer to Figure 2.

Note: If the machine does not have a bucket (3) installed, use wooden blocks under the boom (1) and arm (2) for stability and to protect components.

18. Install enough supports (7) under the lower frame (8) to ensure that the track to be removed, will clear the ground by 1–2 in (*25–50 mm*).
19. Shutdown the engine.
20. Connect a chain (4) to the bottom end of track (5) and bucket (3).

DANGER

Keep all personnel away from moving parts while rotating track (5). Serious personal injury or death may result.

21. Start the engine and drive the track (5) to be removed in reverse, while moving the boom (1) and arm (2) up and out at the same time.

PREVIEW - YOUFIXTHIS.COM
Download full manual at youfixthis.com

4. Turn the key switch to the "OFF" position.

⚠ WARNING

Air lines contain high pressure. Opening lines and fittings prior to relieving air pressure may result in serious injury.

5. Open the air tank drain valve, located just inside the left access door, to bleed the air system pressure.
6. Loosen the air relief plug located on the hydraulic reservoir to bleed air system pressure.
7. Operate the control levers back and forth, left and right, several times to release hydraulic system pressure.
8. When all air pressure is bled from both systems, tighten the air relief plug on hydraulic reservoir and close the air tank drain valve.
9. Take steps to prevent the loss of hydraulic oil. If available, mount a vacuum pump to the hydraulic reservoir. Use caps and plugs on hoses and ports to prevent oil leaks if a pump is not available.
10. Remove the two bottom covers from the machine.
11. Turn on the vacuum pump if mounted.
12. Label for assembly purposes and remove the hydraulic hoses from the top, bottom and sides of the rotating joint (3). Cap or plug hoses and ports.
13. Turn off the vacuum pump.
14. Attach suitable lifting equipment to the rotating joint (3).

    Note: Weight of rotating joint is approximately 125 lb (*57 kg*).

15. Remove capscrews and washers (2) securing the lock bar (1) to the rotating joint (3). Remove the lock bar (1). If necessary, tap the lock bar (1) to free it from the bracket welded to the machine.
16. Remove the capscrews and washers (4) securing the rotating joint (3) to the lower frame.
17. Raise the rotating joint (3) and remove from the machine.
18. If necessary, label for assembly purposes and remove adaptors, elbows, and tees from the hydraulic ports.

Installation

1. If removed, replace all adaptors, elbows and tee fittings to hydraulic ports.
2. Attach suitable lifting equipment to the rotating joint (3).

    Note: Weight of rotating joint is approximately 125 lb (*57 kg*).

3. Move rotating joint (3) into position and lower and align the lobes of the rotating joint (3) to the lower frame mounting bracket.
4. Install the washers and capscrews (4) to secure the rotating joint (3) to the lower frame. Tighten capscrews securely.
5. Position the lug of the lock bar (1) through the bracket welded to the upper structure.
6. Apply Loctite #262® to the threads of the capscrews (2).
7. Install capscrews and washers (2) to secure the lock bar (1) to the rotating joint (3).
8. Torque the capscrews (2) to 181–214 ft–lb (*245–290 Nm*).
9. Turn on the vacuum pump if mounted.
10. Install all hydraulic hoses according to the labels prepared during disassembly.
11. Turn off the vacuum pump.
12. Operate the machine in travel mode. Shutdown the engine and check for hydraulic fluid leaks. If leaks are present, repair as required.
13. Install the bottom covers.
14. Check hydraulic reservoir oil level. Add oil as required. See Operator's Manual for correct type and procedure.
15. Test all hydraulic functions prior to returning machine to service.

PREVIEW - YOUFIXTHIS.COM

Download full manual at youfixthis.com

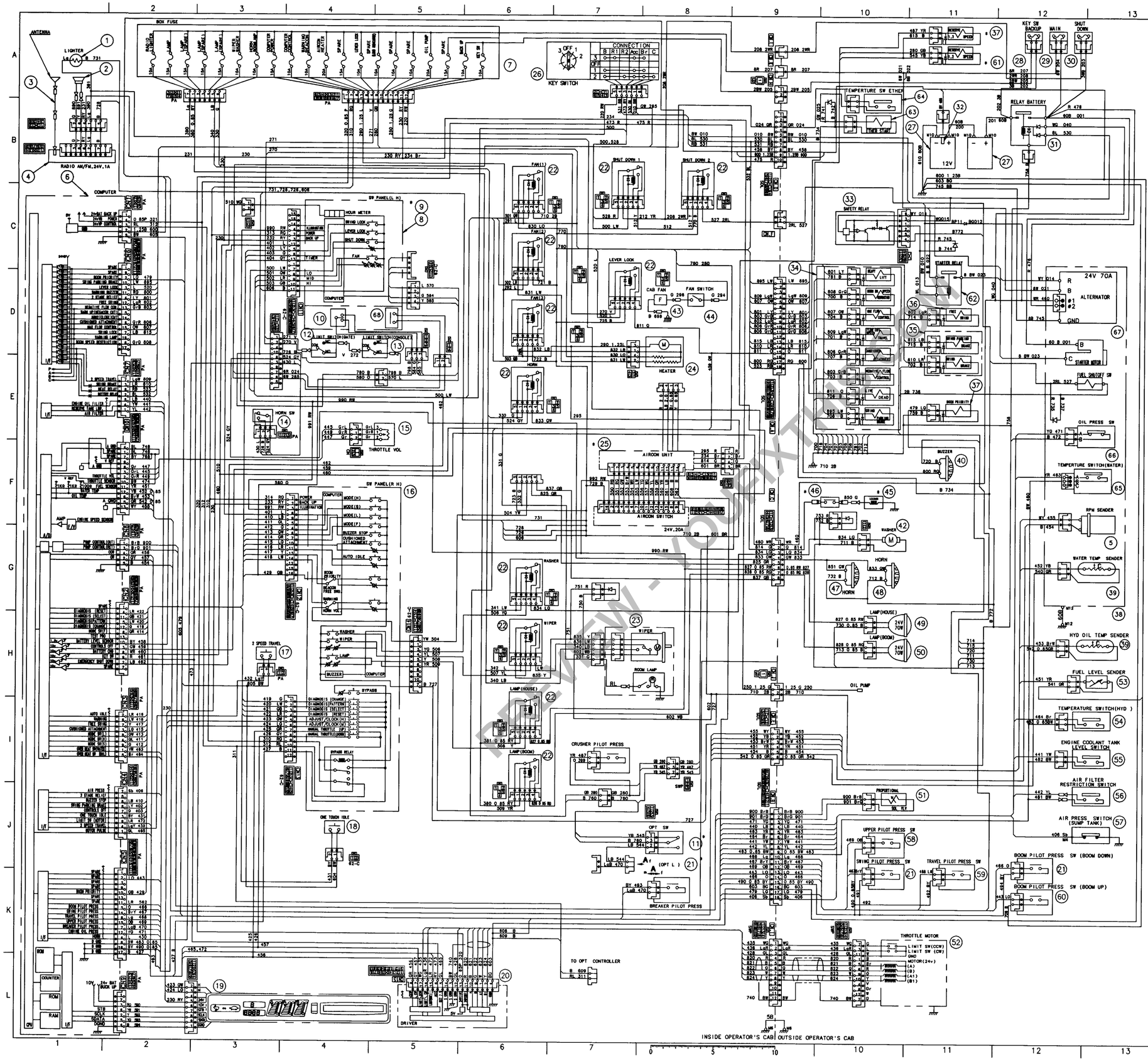

1	LIGHTER.CIGAR
2	SPEAKER
3	CORD.ANTENNA
4	RADIO. AM/FM
5	PICKUP. RPM
6	CONTROLLER
7	BOX.FUSE
8	PANEL.SWITCH(LH)
9	PANEL SWITCH(RH)
10	BATTERY.CHARGER
11	ROOM.PRIORITY
12	SWITCH. BREAKER
13	SWITCH.UNIT
14	SWITCH.UNIT
15	KNOB(SWITCH)
16	CONSOLE
17	SWITCH.SPL
18	PANEL.SWITCH(RH)
19	SWITCH.SPL
20	KNOB(SWITCH)
21	MONITOR
22	DRIVER
23	SWITCH.PRESS.
24	RELAY
25	CAB
26	HEATER
27	AIR CONDITIONER(UNIT)
28	SWITCH.STARTER
29	BATTERY. 12V-950 CCA
30	FUSE(FUSEBLELINK)
31	FUSE(FUSEBLELINK)
32	FUSE(FUSEBLELINK)
33	RELAY.BATTERY
34	BATTERY. SENSOR
35	RELAY.SAFETY
36	VALVE.SOLENOID
37	VALVE.SPL
38	VALVE:SOLENOID
39	VALVE.SOLENOID
40	ENGINE:DIESEL
41	SENSOR.THERMO
42	ALARM:SPL
43	NOT USED
44	TANK. WINDSHIELD WASHER
45	FAN. CAB
46	SWITCH. FAN
47	COMPRESSOR
48	BINARY SWITCH. A/C
49	HORN
50	HORN
51	LAMP.WORKING
52	LAMP.WORKING
53	PUMP:HYD.
54	MOTOR.THROTTLE
55	SENSOR.FUEL
56	SWITCH.THERMO
57	SWITCH.LEVEL
58	SENSOR.VACUUM
59	SWITCH.PRESS.
60	SWITCH.PRESS.
61	SWITCH.PRESS.
62	SWITCH.PRESS.
63	VALVE.SOLENOID
64	RELAY.SPL
65	SOL. ETHER START
66	TEMP. SWITCH. ETHER
67	TEMP. SWITCH. COOLANT
68	SWITCH. OIL PRESSURE
	ALTERNATOR 24V 70A
	SWITCH. ETHER START

NOTES

1) ITEMS MARKED WITH AN * ARE OPTIONAL

2) GROUND CONNECTIONS AND WIRE JUCTIONS ARE SHOWN BY THE FOLLOWING SYMBOLS

HARNESS — GROUND WIRE — CONNECTED EACH OTHER — NOT CONNECTED EACH OTHER

3) THE NUMBER, SIZE, AND COLOR OF EACH WIRE IS SHOWN BY THE FOLLOWING. ANY WIRE SIZE NOT INDICATED IS 0.5 mm² (16 GA.)

EXAMPLE

CIRCUIT NO 001 — SIZE (mm²) 608 — COLOR W (BEARS CABLE COLOR) G (STRIPED BY G)

EXAMPLE W: WIRE COLOR, GREEN: STRIPE COLOR

4) THE CONNECTORS ARE IDENTIFIED BY THE FOLLOWING SYMBOLS

FEMALE TERMINAL — MALE TERMINAL

CN — CONNECTOR NO — ( ) COLOR OF CONNECTOR (UNLESS INDICATED THE COLOR IS WHITE)

TABLE OF COLOR SYMBOLS

SYMBOL	COLOR	SYMBOL	COLOR
B	BLACK	R	RED
W	WHITE	Y	YELLOW
Br	BROWN	Lg	LIGHT GREEN
P	PINK	Sb	SKY BLUE
V	VIOLET	L	BLUE
G	GREEN	Gr	GRAY
O	ORANGE		

Download full manual at youfixthis.com

Troubleshooting Chart

Problem	Cause	Remedy
1. Sandblasted band around pressure plate bores 2. Angle groove on face of pressure plate 3. Lube groove enlarged and edges rounded 4. Dull area on shaft at root of tooth 5. Dull finish on shaft in bearing area 6. Sandblasted gear bore in housing	1. Abrasive wear caused by fine particles. a. Dirt (fine contaminants, not visible to the eye)	1. Was clean oil used? 2. Was filter element change period correct? 3. Were correct filter elements used? 4. Cylinder rod wiper seals in good condition? 5. Cylinder rods dented or scored? 6. Was the system flushed properly after previous failure?
1. Scored pressure plates 2. Scored shafts 3. Scored gear bore	1. Abrasive wear caused by metal particles. a. Metal (coarse) contaminants, visible to the eye	1. Was system flushed properly after previous failure? 2. Contaminants generated elsewhere in hydraulic system? 3. Contaminants generated by wearing pump components?
1. Any external damage to pump 2. Damage on rear of drive gear and rear pressure plate only	1. Incorrect Installation	1. Did shaft bottom in mating parts? 2. Any interference between pump and machine?
1. Eroded gear plate 2. Eroded pressure plates	1. Aeration – Cavitation a. Restricted oil flow to pump inlet b. Aerated oil	1. Tank oil level correct? 2. Oil viscosity as recommended? 3. Restriction in pump inlet line? 4. Air leak in pump inlet line? 5. Loose hose or tube connection near or above oil level in tank? 6. Excessive operation of relief valve?
1. Heavy wear on pressure plate 2. Heavy wear on end of gear	1. Lack of Oil	1. Was oil level correct? 2. Any leaks in piping inside tank? 3. Any oil returning above oil level?
1. Gear plate scored heavily 2. Inlet peened and battered 3. Foreign object caught in gear teeth	1. Damage caused by metal object	1. Metal object left in system during initial assembly or previous repair? 2. Metal object generated by another failure in system?
1. Pressure plate black 2. O–rings and seals brittle 3. Gear and journals black	1. Excessive Heat	1. Was valve stuck? 2. Was relief valve too low? 3. Was oil viscosity correct 4. Was oil level correct?
1. Broken shaft 2. Broken gear plate or flange	1. Over Pressure	1. Relief valve setting correct? 2. Did relief valve function?

PREVIEW - YOUFIXTHIS.COM

Download full manual at youfixthis.com

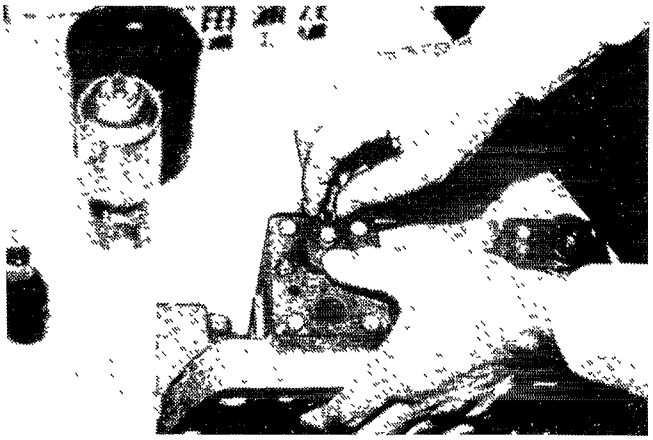

45. Press the spring seat down and insert the ring horizontally into the groove of the rod.

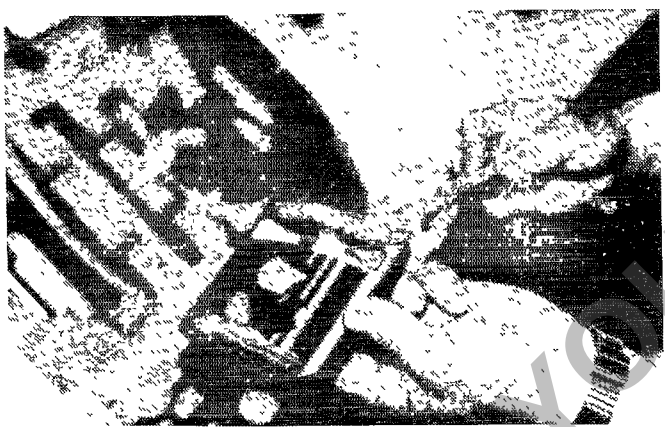

46. Apply clean grease on the body and sliding part of the control plate and install to the main body of control plate.

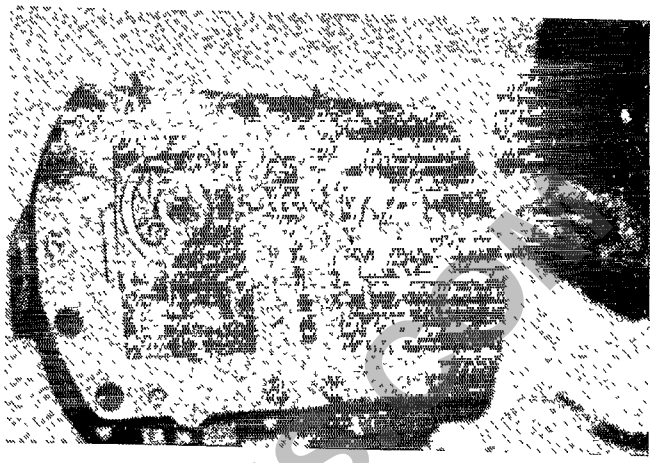

Cover of directional control valve.

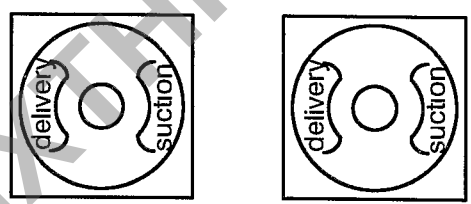

(drive side) (driven side)

47. Apply a light coat of clean grease on the spherical surface of control plate and install control plate. Follow the diagram above.

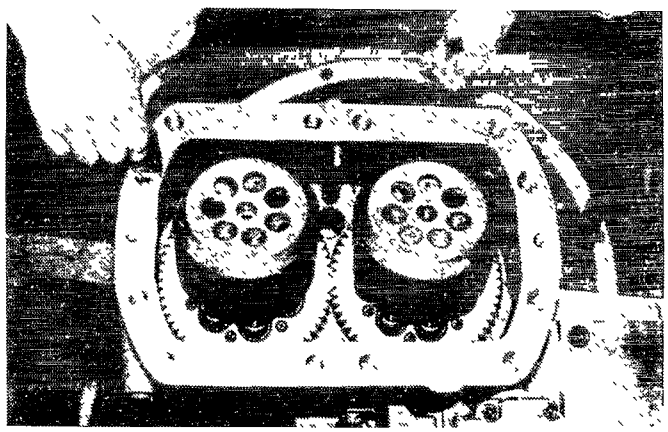

48. Apply liquid packing #1215 evenly. Clean and degrease the installation surface of housing. Install the alignment pins.

PREVIEW - YOUFIXTHIS.COM

Download full manual at youfixthis.com

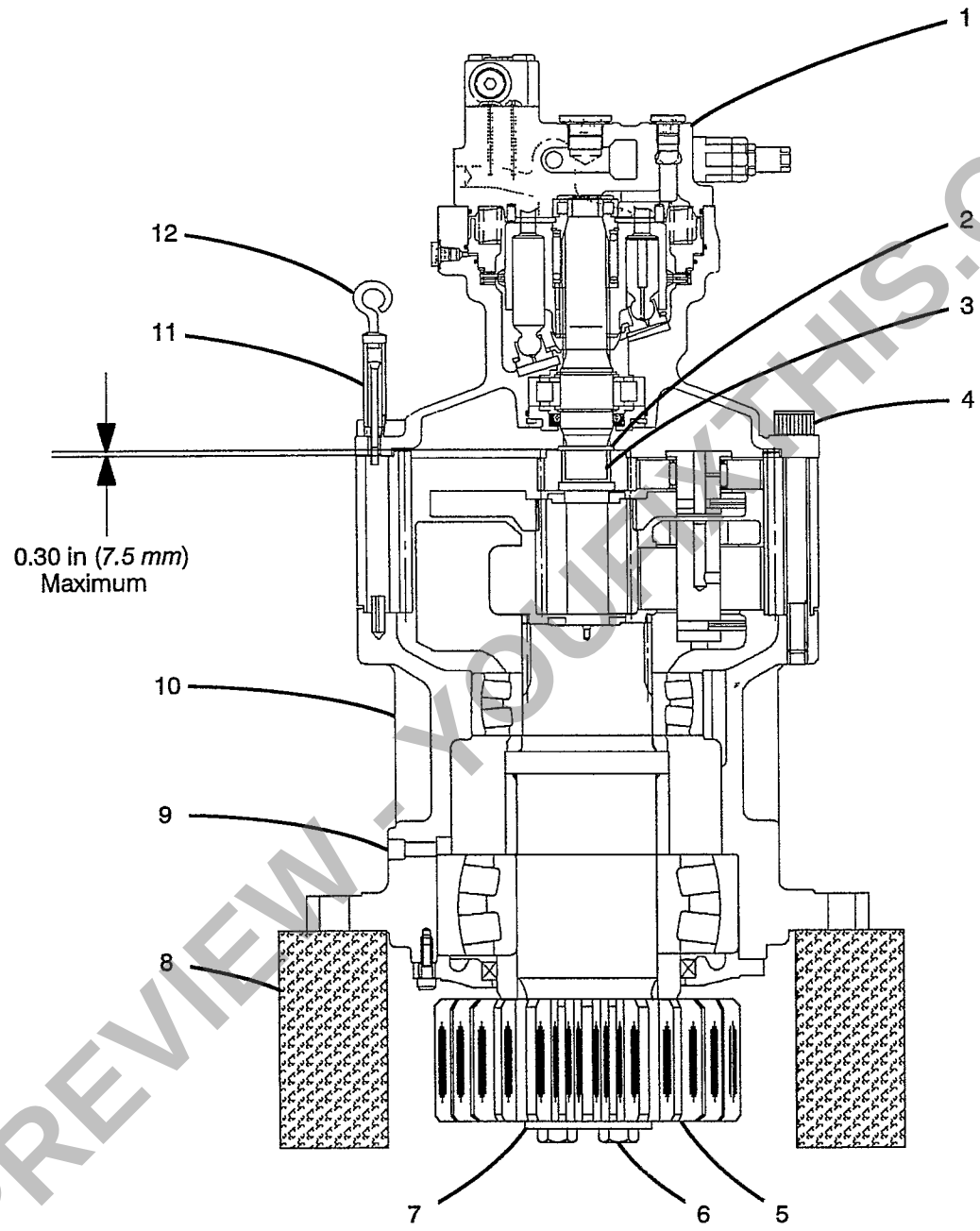

1. Swing Motor
2. Snap Ring
3. Output Shaft
4. Capscrews
5 Pinion Gear
6. Capscrews
7. Plate
8 Blocking
9. Drain Plug
10. Gear Housing
11. Tube
12. Oil Level Gauge

Figure 1
Swing Reduction Gears & Swing Motor Assembly

SD00705

PREVIEW - YOUFIXTHIS.COM
Download full manual at youfixthis.com

11. Remove the nut and shim.
    a. Loosen and remove the setscrew (29).
    b. Remove the steel ball located below the end of the setscrew (29).

       Note: The nut is torqued to 6,880 ft–lb (*9 329 Nm*). It may require 1½ times that amount to break the nut free.

    c. Remove the nut and shim (28).
12. Slide the piston (25), the cushion ring (24) and the head (2) from the rod (23).
13. Place the piston (25) in a vise with jaws protected by soft material.
14. Remove seals and rings from the piston:
    a. Remove the slip rings (26).
    b. Remove the seal assembly (27) by cutting or breaking with a suitable tool.
    c. Remove the o–ring under the seal ring by carefully prying it out.
    d. Discard the seals and rings. Do not reuse.
15. Remove seals and rings from head:
    a. Remove o–ring and back up ring (22).
    b. Remove u–ring (16) and back up ring (15).
    c. Remove the slip ring (14).
    d. Remove buffer ring which consists of a wear ring (19), back up rings (17) and a square ring (18).
    e. Remove the wiper ring (13).
    f. Use a flat screwdriver to pry out snap ring (21).
    g. Place cylinder head in a press and use a suitable driver to press out bushing (20).
16. Remove the cushion ring (24).
17. If inspection reveals excessive wear or damage, remove the bushings (11) and dust seals (12).
    a. Remove the dust seals (12).
    b. Use a suitable press and remove bushings (11).

Cleaning and Inspection

⚠ WARNING

Follow all manufacturer's recommendations concerning solvents and cleaning solutions. Serious personal injury may result from misuse of these products.

Refer to Figure 2.

1. The cylinder case (4) bore should be thoroughly cleaned with an approved cleaner and carefully inspected for signs of scoring or deep scratches.
2. The rod (23) should be thoroughly cleaned with an approved cleaner and carefully inspected for damage such as dents, deep scratches and/or damaged chrome plating. All sharp edges should be carefully removed with a fine file or hone to prevent damage to seals during assembly.
3. Check inside diameter (ID) of bushings (11). If ID is greater than listed below, replace the bushings (11) and dust seals (12).

Rod End Bushing	3.996 in (*101.5 mm*) ID.
Case End Bushing	3.602 in (*91.5 mm*) ID.

4. All remaining metal parts should be thoroughly cleaned with an approved cleaner and carefully inspected for damage and/or excessive wear. Check all welds on parts. Replace as required.
5. Check and thoroughly clean all grooves on the piston (25). Grooves should be clean and free of all foreign matter. Edges should be smooth and even.
6. In the event of severe defects, contact factory personnel for directions whether to repair or replace cylinder components.
7. Inspect all new assembly components for imperfections or damage.

Assembly

Refer to Figure 2.

Take steps to keep all cylinder components clean and free of any contaminants. Do not allow any dirt or contaminants to enter the case (4) during assembly.

Always use new seals, back up rings and o–rings during installation. Lubricate all seals, all rings, all threads and entire cylinder bore with Cosmolube® No. 2 or equivalent prior to assembly. Lubrication prevents seals and rings from twisting or rolling while being installed.

⚠ CAUTION

Do not clamp rod (23) in any form of vise unless jaws are protected by a soft material. Do not weld around it as welding splatter could strike the finished surface. Either may damage the chrome finish on the rod.

1. If the ID of bushings (11) is greater than the specifications listed in Cleaning and Inspection step 3, bushings (11) and dust seals (12) must be replaced:
   a. Use a suitable press and driver and press the bushings (11) into place.
   b. Install dust seals (12) with lip side facing out. Press securely into place.

PREVIEW - YOUFIXTHIS.COM

Download full manual at youfixthis.com

PREVIEW ONLY

You're viewing 12 of 208 pages

The full manual includes:

- All 208 pages, complete
- Searchable PDF (find any keyword)
- No watermarks
- Instant download
- Print-ready quality

GET FULL MANUAL NOW

Link-belt 4300, 4300 Quantum Service Manual

Scan or click anywhere
youfixthis.com

Click anywhere on this page to get the full manual