POSITION OF THE OPERATOR'S COMPARTMENT CONTROLS AND ACCESSORIES

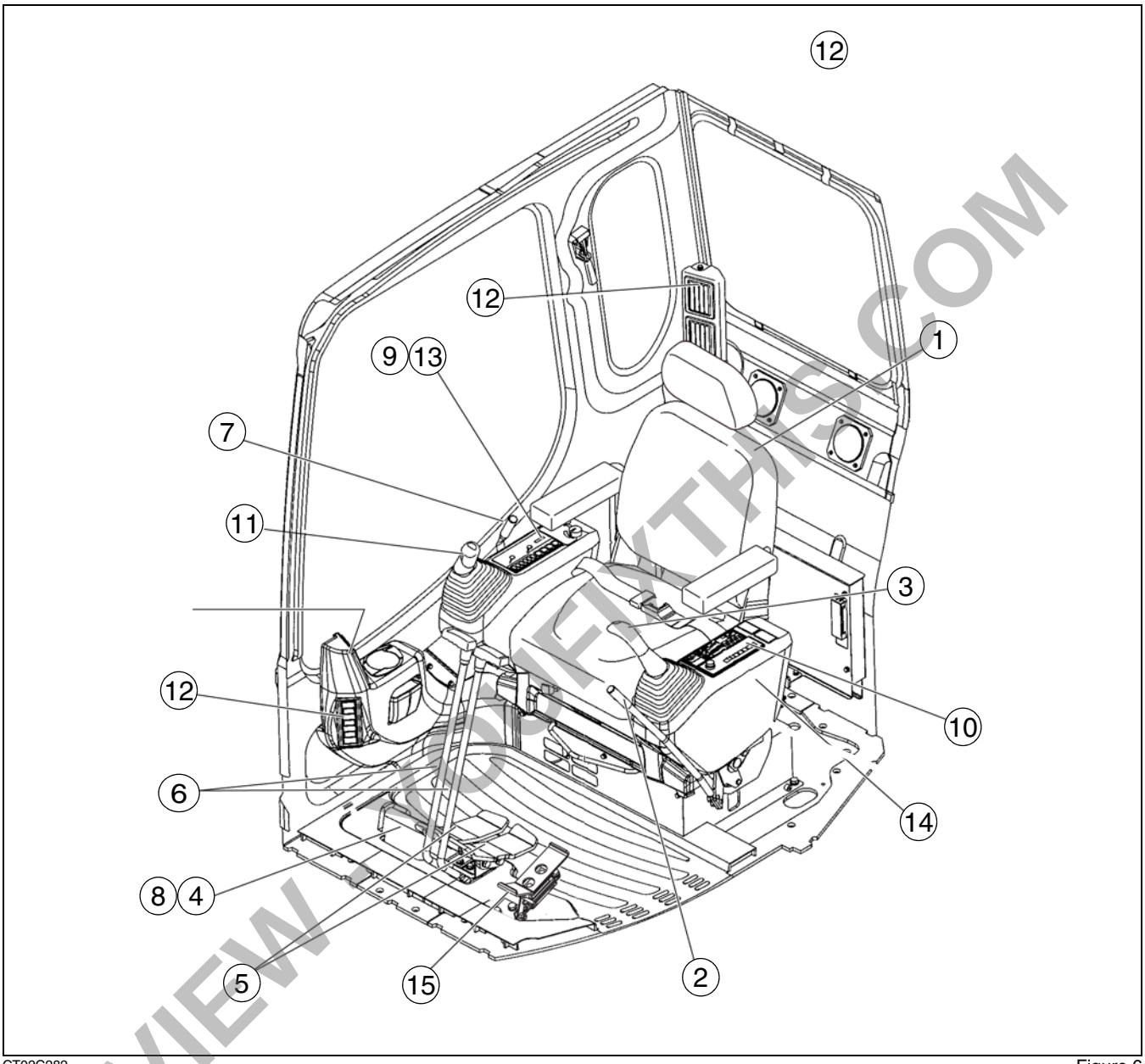

CT02C282

Figure 6

1. OPERATOR'S SEAT
2. GATE LOCK LEVER
3. LEFT-HAND CONTROL LEVER
4. FOOT REST (PEDAL LOCKED)
5. TRAVEL CONTROL PEDAL
6. TRAVEL CONTROL LEVER
7. DOZER BLADE LEVER
8. OPTION PEDALS
9. INSTRUMENT PANEL
10. HEATING, AIR-CONDITIONING, AND OPTIONAL CONTROL
11. RIGHT-HAND CONTROL LEVER
12. AIR VENTS
13. RIGHT-HAND CONTROL ARM
14. LEFT-HAND CONTROL ARM
15. SWING BOOM PEDAL

WARNING: *Before starting the engine, make sure that you are fully aware of the location of and the function of each control. Incorrect operation of the controls can cause serious injuries.*

PREVIEW - YOUFIXTHIS.COM

Download full manual at youfixthis.com

BEFORE OPERATING THE EXCAVATOR

WARNING: *Do not attempt to operate this excavator unless you have first read and perfectly understood the safety messages and instructions appearing in this manual.*

Before operating this excavator, be sure to do the following:

1. Check the level of all fluids (engine oil, hydraulic fluid and coolant) and make sure that the fluids and lubricants are suitable for prevailing conditions. See Lubrication/Filters/Fluids section and Operating the excavator in cold weather.
2. Carry out the daily maintenance operations. See section Servicing intervals.
3. Inspect the excavator, look for any signs of possible leakage and check the hoses. Tighten or replace as necessary. See section Maintenance/Adjustments.
4. See Run-in period if the excavator is new or if the engine has been reconditioned.
5. Check the track assemblies. See Tracks in the Maintenance/Adjustments section.
6. Clean the steps and access handles. Grease, oil, mud or ice (in winter) on the steps and access handles can causes accidents. Make sure they are kept clean at all times.
7. Clean or replace any decals which are illegible. See Decals in the Safety/Decals/Hand signals section.
8. Make sure that the engine hood and the side doors are properly closed and latched.
9. Secure the cab door in either fully closed or fully opened position.
10. Remove any obstructions which hinder visibility. Clean the windshield, the windows and the rear view mirrors.
11. Check that no tools or other items have been left on the excavator (be it on the undercarriage or the upperstructure) or in the operator's compartment.
12. Make sure nobody is on or under the excavator. The operator must be alone on the excavator.
13. Make sure nobody is standing in the excavator working area.
14. Find out about current safety measures in use on the work site.
15. Work out a convenient means of escape from the excavator (emergency exit via the windshield, the rear window glass) in the event of the cab door being jammed or the excavator turning over. See Windshield in the Controls/Instruments/Accessories section.
16. Before undertaking any travel or working operations during hours of darkness, make sure the lighting and signalling equipment is fully operative.

OPERATING THE EXCAVATOR

WARNING: *Check all controls and safety devices in a safe, open area before starting work.*

When operating the excavator, be sure to do the following:

1. When starting the engine, be sure to use the correct procedure for the prevailing weather conditions. See Starting the engine.
2. Regularly consult the hourmeter to ensure that all servicing operations are carried out punctually. See section Servicing intervals.
3. If you use your excavator in particularly harsh conditions (dusty or corrosive atmosphere), the servicing intervals should be reduced accordingly.
4. Take note of the locations of pipes/cables before starting work.
5. Do not work near overhead high-voltage electric lines without checking beforehand that all necessary measures have been taken to respect the safest distances:

   Less than 57 000 volts: 3 metres (10 ft)

   More than 57 000 volts: 5 metres (16 ft)
6. When working on a public highway, use standard traffic signs and take into consideration the working range of the upperstructure and its attachments.
7. Never operate the working or travel controls unless you are properly seated in the operator's seat with the seat belt correctly fastened.
8. Modify your operation to suit the type of work and working conditions. See Operating instructions in the Job Site Operation section.
9. Do not allow anyone within the excavator's operating radius. Stop all operations until everyone has moved away.
10. Operate all controls gradually to ensure smooth excavator operation.

PREVIEW - YOUFIXTHIS.COM

Download full manual at youfixthis.com

SERVICING INSTRUCTIONS

Respect the maintenance intervals by checking the hourmeter every day. Before starting maintenance, park the excavator on flat, firm ground, away from any obstacles, with the arm retracted and the bucket on the ground. Unless otherwise specified, all maintenance operations must be carried out with the engine stopped, and the key removed from the starter switch. It is preferable to wait for all circuits to cool down before starting work.

Clean the grease fittings before lubrication. Clean around plugs and filler holes before adding fluid. No dust or dirt must enter the components or the circuits. Wear suitable clothing and remember to use the necessary safety equipment.

WARNING: *There is a risk of serious injury if maintenance or repairs are not carried out correctly. If you do not understand maintenance procedures, consult your LBX Link-Belt distributor.*

WARNING: *If the attachment is raised or if the excavator moves without an operator, serious injury can result. Before performing any maintenance, proceed as follows:*

1. *Park the excavator on flat, level ground.*
2. *Lower the attachment until it is resting on the ground.*
3. *Lower the dozer blade (if equipped) until it rests on the ground.*
4. *Shut down the engine and remove the starter key switch.*
5. *Lock the tracks to prevent any excavator movement.*

WARNING: *Be sure all the service operations in this section are carried out punctually at the intervals given, in order to ensure optimum performance levels and maximum safety when using the excavator.*

1. When carrying out service work on the excavator, place a Do Not Operate tag on the instrument panel. Never climb down from the operator's compartment leaving the engine running.

Any modification to this excavator without prior authorization could cause serious injury. Do not make any modifications without authorization. Consult your LBX Link-Belt distributor.

IMPORTANT: *If you use your excavator in particularly harsh conditions (dusty or corrosive atmosphere, etc.), the servicing intervals should be reduced accordingly.*

IMPORTANT: *Take particular care to replace all filters regularly. Clean filters mean longer engine running life.*

IMPORTANT: *Oil and fluid should not be thrown on the ground. They must be stored and removed by a company which is responsible for their recycling or their disposal.*

SERVICE SPECIFICATIONS

Intervals between overhauls are much more frequent for the following applications: construction of tunnels using a hydraulic breaker, scale stripping, foundry cleaning, operation under water etc. For special applications consult your LBX Link-Belt distributor.

PREVIEW - YOUFIXTHIS.COM

Download full manual at youfixthis.com

HARDWARE TORQUE INSPECTION

MAINTENANCE SPECIFICATION

Check .....Every 250 hours
(after the first 50 hours during the run-in period)
At the end of each working day, check all mounting nuts and screws for tightness and tighten if necessary. Make sure no hardware items are missing. Replace them, if necessary.

Blurred on purpose. The manual you buy has this page in full quality.

PREVIEW - YOUFIXTHIS.COM

Download full manual at youfixthis.com

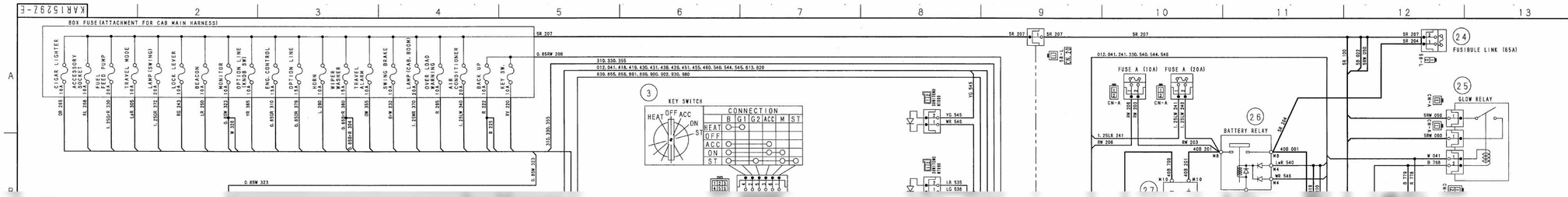

PART NO.	DESCRIPTION	SYM	MATERIAL GROUP	QTY	TOTAL WT. (kg)	STANDARD NO.	REMARKS
KHR4105X-B	MONITOR モニター 12V	1		1			NIPPON SEIKI 日本精機
KHR3366X-A	LOUDSPEAKER スピーカ	2		2			CLARION クラリオン
KHR3270X-B	SWITCH:STARTER スイッチ:スタータ ASSY(1H1)	3		1			TOUKAIRIKA 東海電機
KHJ2912X-B	KNOB (R) 4 SWITCHT ノブ(R) 4スイッチ	4		1			KAWASAKI 川崎重工
KHR2751X-B	SWITCH SPL スイッチ スロットル	5		1			TOKYO COSMOS 東京コスモス電機
KHR3196	SWITCH:SPL スイッチ ロッカー(下部2連用)	6		1		KHR2519X-C	U-SHIN ユーシン
KHR1873X-A	SWITCH:LIMIT スイッチ:リミット	7		1			NILES PARTS ナイルス部品
KHJ2913X-B	KNOB (L) 4 SWITCHT ノブ(L) 4スイッチ	8		1			KAWASAKI 川崎重工
KHR3369X-B	LAMP:WORKING ライト:ワーキング	9		2			HIGHT BEAM ナイトビーム
KHR3945X-A	RADIO SET ラジオ:カー AM/FM ステレオ<H>	10		1			ESPERIA エスペリア
KHR3803X-B	RELAY:SPL リレー チェンジオーバー12V	11		※ 2 10			MITUBA ミツバ電気
KHR3121X-B	SWITCH:SPL スイッチ ロッカー(下部2連用)	12		1		KHR2519X-C	U-SHIN ユーシン

PREVIEW - YOUFIXTHIS.COM

Blurred on purpose. The manual you buy has this page in full quality.

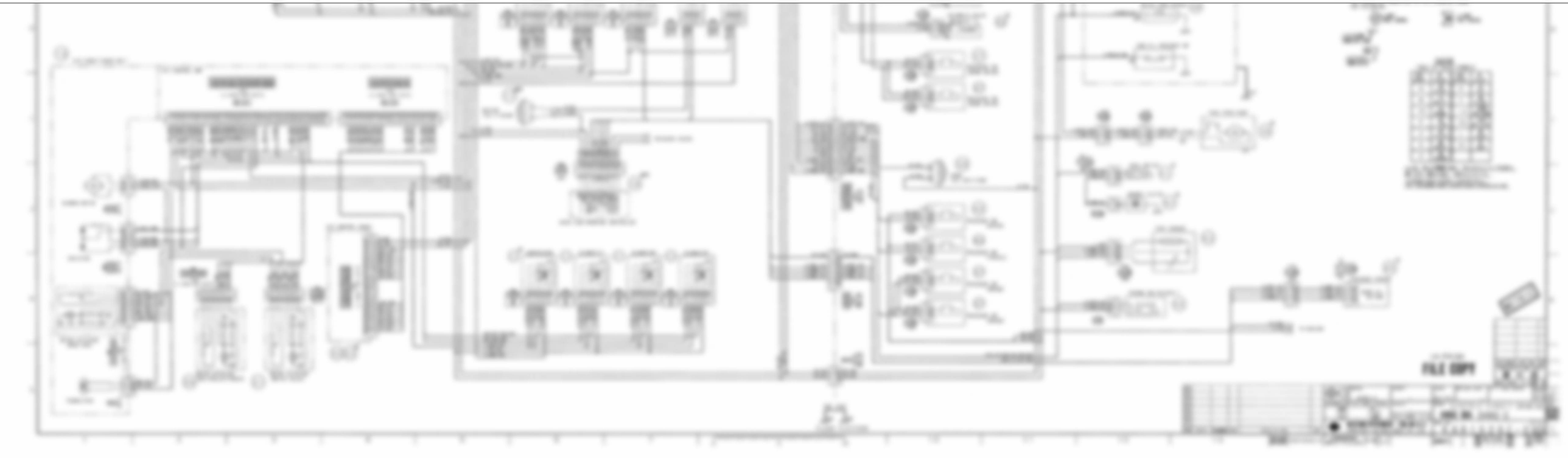

Download full manual at youfixthis.com

TABLE OF CONTENTS

CHAPTER 1
GENERAL INFORMATION
To The Owner 1-1
Excavator Components 1-3
Identification Numbers 1-5

CHAPTER 2
SAFETY, DECALS, AND HAND SIGNALS
Table of Contents 2-1
Safety Rules 2-3
Safety Area 2-3
Utility Safety 2-3
Operator Precautions 2-4
Decals 2-9
Hand Signals 2-14

CHAPTER 3
INSTRUMENTS AND CONTROLS
Table of Contents 3-1
Cab Door 3-3
Steps and Access Handles 3-4
Position of the Operator's Compartment Controls and Accessories 3-5
Right-hand Control Arm 3-6
Instrument Panel 3-7
Left-hand Control Arm 3-9
Working Light Switch 3-10
Windshield Washer Switch 3-10
Windshield Wiper Switch 3-10
High Speed Travel Switch 3-10
Heating, Ventilation And Air-conditioning Control 3-11
Swing Boom And Option Pedals 3-12
Swing Boom Control Pedal 3-12
Control Pattern Selector Valve 3-13
Arm and Upperstructure Swing Left-hand Control Lever In Pattern D 3-14
Boom and Bucket Right-hand Control Lever In Pattern D 3-14
Arm And Upperstructure Swing Left-hand Control Lever In Pattern C 3-15
Boom And Bucket Right-hand Control Lever In Pattern C 3-15
Travel Control 3-16
Gate Lock Lever 3-17
Unlocking and Locking of Pedals 3-17
Dozer Blade Control Lever 3-18
Cab Light 3-18
Coat Hanger Hook 3-18
Rear Right-hand Side Window 3-18
Cup Holder 3-19
Storage Tray 3-19
Ashtray 3-19
Cab Radio Compartment 3-19
Speaker Compartments 3-19
Fuse Box 3-19
Operator's Seat 3-20
Windshield 3-23
Lower Front Window 3-25
Window-Breaker Hammer 3-25

PREVIEW - YOUFIXTHIS.COM

Download full manual at youfixthis.com

SAFETY RULES

WARNING: *This safety alert symbol indicates important safety messages in this manual. When you see this symbol, carefully read the message that follows and be alert to the possibility of death or serious injury.*

M171C

Most accidents involving excavator operating and maintenance can be avoided by following basic safety rules and precautions. Read and understand all the safety messages in this manual, the safety manual and the safety signs on the excavator before you operate or service the excavator. See your distributor if you have any questions.



RD98K305 Figure 1

1. OPERATOR'S MANUAL STORAGE BOX

READ THIS MANUAL COMPLETELY and make sure you understand the controls. All equipment has a limit. Make sure you understand the speed, brakes, steering, stability and load characteristics of this excavator before you start to operate.

DO NOT remove this manual or the safety manual from the excavator. See your distributor for additional manuals. Also see the manual information on the inside of the rear cover of this manual.

The safety information given in this manual does not replace safety codes, insurance needs, federal, state or local laws. Make sure that your excavator has the correct equipment according to these rules or laws.

Additional safety messages are used in the text of the manual to show specific safety hazards.

IMPORTANT: *The safety messages in this chapter point out situations which can happen during the normal operation and maintenance of your excavator. These safety messages also give possible ways of dealing with these conditions.*

SAFETY AREA

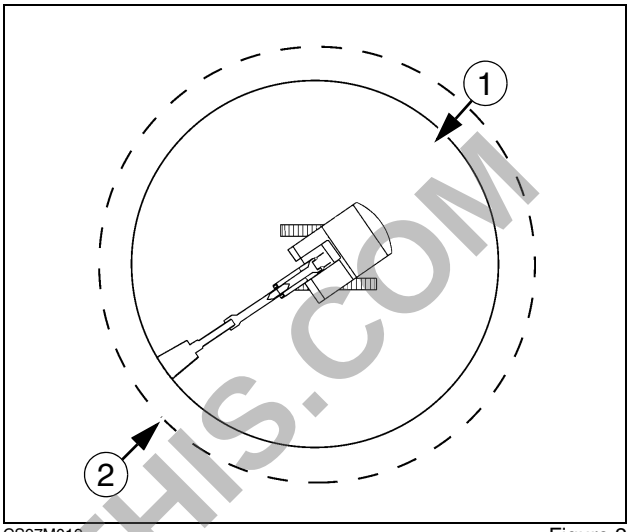

CS97M019 Figure 2

1. WORKING AREA
2. SAFETY AREA

The safety area is the space necessary for the excavator to operate at the maximum range of the tool and a full 360° swing plus 6 feet (2 metres).

UTILITY SAFETY

Safety precaution **MUST** be followed when working near buried and over head Utility Lines.

During operation it is likely that you will be working around or near buried or over head utility lines which may include, but are not limited to:

- Electrical Power Line
- Gas Line
- Water Line
- Communication Line - Telephone or Cable Television

Before beginning any excavator operation, it is your responsibility to be aware of all such utility lines buried and over head in the area of your project and to avoid them.

ALWAYS have all local utility companies mark the location of their lines.

In U.S.A. and Canada call one of many "One Call System Director" services. If you do not know the local number, call the national number (U.S.A. and Canada only): 1-888-258-0808.

Check with local authorities for laws, regulations and/or strict penalties requiring you to locate and avoid existing utilities.

PREVIEW - YOUFIXTHIS.COM

Download full manual at youfixthis.com

Air Vents . . . 3-25
Rear View Mirrors . . . 3-26
Fuel Tank . . . 3-26
Engine Hood . . . 3-27
Side Doors . . . 3-27
Right-hand Front Side Door . . . 3-28
Rotating Beacon Cable . . . 3-28
Towing Point . . . 3-29
Lifting Eyes . . . 3-29
Windshield Washer Reservoir . . . 3-29
Tool Supply Valves (Optional) . . . 3-30
Tool Flow Selector Valve (Optional) . . . 3-30

CHAPTER 4
OPERATING INSTRUCTIONS
Table of Contents . . . 4-1
Before Operating the Excavator . . . 4-3
Operating the excavator . . . 4-3
Run-in Period . . . 4-4
Starting the Engine . . . 4-4
Bringing the excavator up to Operating Temperature . . . 4-6
Engine Operation . . . 4-6
Stopping the Engine . . . 4-7
Operating the Excavator in Cold Weather . . . 4-8
Operating the Excavator in Hot Weather . . . 4-8
Basic Operation . . . 4-8
Excavator Travel . . . 4-9
Transporting the Excavator . . . 4-11
Handling the Excavator . . . 4-14
Operating the Excavator In Water . . . 4-14
Parking the Excavator . . . 4-14
Operating the Excavator on Sloping Ground . . . 4-15
Towing the Excavator . . . 4-15
Operating the Bucket . . . 4-16
Lowering The Attachment In The Event Of A Excavator Failure . . . 4-16
Excavator Storage . . . 4-20

CHAPTER 5
LUBRICATION, FILTERS, AND FLUIDS
Table of Contents . . . 5-1
Servicing Instructions . . . 5-3
Daily Inspections . . . 5-4
Hourmeter . . . 5-4
Lubrication Chart For 80 Spin Ace . . . 5-5
Fluids and Lubricants . . . 5-6
Fluid and Lubricant Capacities and Specifications . . . 5-8
Lubrication Points . . . 5-9
Greasing the Turntable Teeth . . . 5-11
Fluid Levels . . . 5-12
Engines . . . 5-13
Cooling System . . . 5-15
Fuel System . . . 5-17
Releasing Pressure in the Hydraulic System . . . 5-20
Hydraulic System . . . 5-21
Air Filter . . . 5-29
Swing Reduction Gear . . . 5-32
Travel Reduction Gears . . . 5-34

PREVIEW - YOUFIXTHIS.COM

Download full manual at youfixthis.com

RIGHT-HAND CONTROL ARM

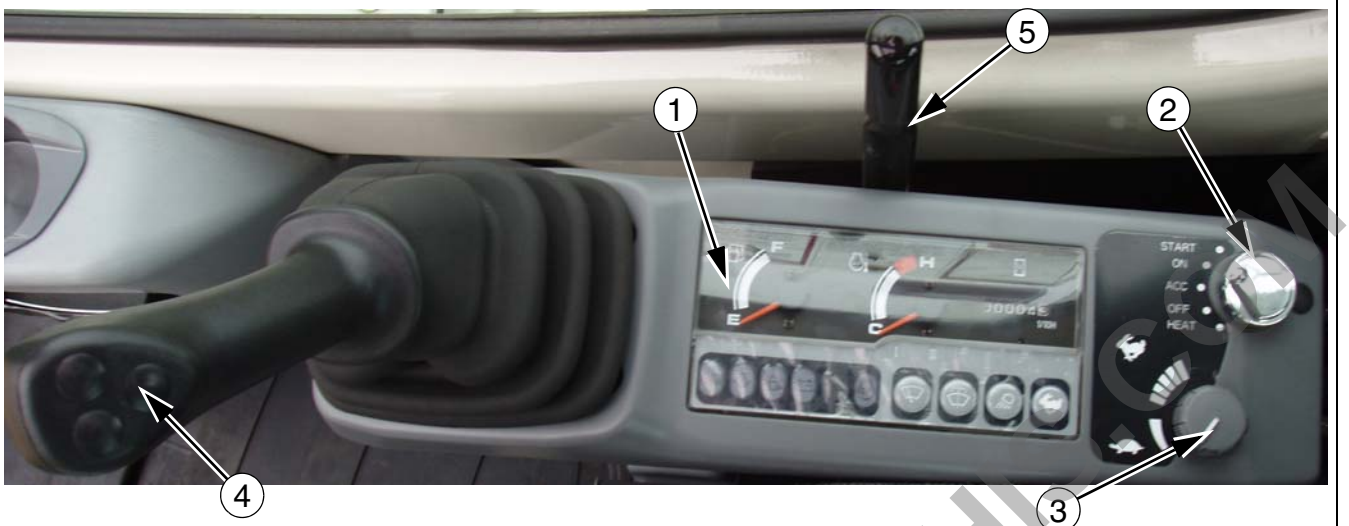

CT02C046

Figure 7

1. INSTRUMENT PANEL

   For more details, see Instrument panel.

2. STARTER SWITCH

   This switch has five positions, ON (contact), START (engine ignition), OFF (engine shut-down), ACC (accessory current supply), and HEAT (glow plug). See Starting the engine in the Operating Instructions section.

   This key is also used to lock the cab door, the engine hood, the side doors, and the fuel tank cap.

3. ENGINE THROTTLE BUTTON

   This button enables the increase or reduction in the engine speed. For LOW IDLE position, turn the button to the left. For MAXIMUM SPEED, turn the button to the right.

   If there is no change in engine speed, press and release the engine automatic idle speed selector (See item 4).

4. ENGINE IDLE SPEED SELECTOR

   This control enables automatic engine idle without operating the throttle button. For engine automatic idle, press and release the control and the engine will be in LOW IDLE position. Press once again on the control then release it, the engine returns to its initial speed.

5. DOZER BLADE CONTROL LEVER

   This lever enables the operation of the dozer blade, see Dozer blade control lever.

PREVIEW - YOUFIXTHIS.COM

Download full manual at youfixthis.com

BRINGING THE EXCAVATOR UP TO OPERATING TEMPERATURE

IMPORTANT: *Normal operating temperature of the hydraulic fluid is between 50°C and 80°C (122° - 176° F) in the middle of the temperature indicator. If the excavator is used with the hydraulic fluid at a temperature below 20°C (68°* F) *then damage can be caused.*

After starting the engine and before using the excavator, wait till the temperature of the hydraulic fluid reaches 20°C *(68°* F).

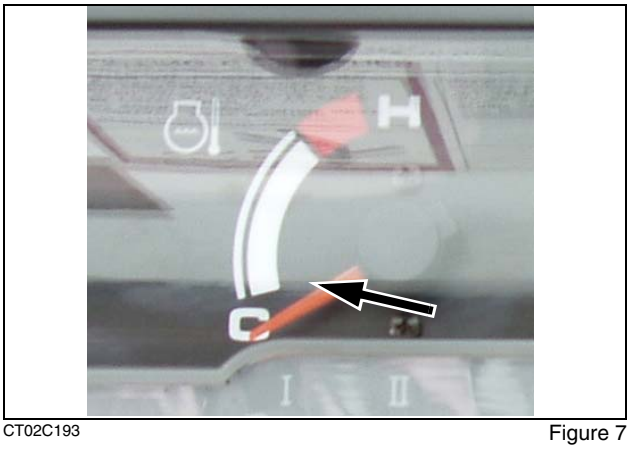

CT02C193 Figure 7

BRINGING THE ENGINE UP TO OPERATING TEMPERATURE

With the engine throttle button a quarter open, start the engine and allow it to run approximately for 5 to 10 minutes. When the coolant temperature increases, carry out the hydraulic fluid warm-up procedure.



CT02C188 Figure 8

HYDRAULIC FLUID WARM-UP

Turn the engine throttle button to half-open position. Operate the bucket control slowly until the bucket is completely closed. Operate the arm retracting control slowly until the arm is completely retracted and hold the control in this position for 30 seconds. During this time the temperature of the hydraulic fluid will increase.

After 30 seconds, extend the arm completely and hold the control in this position a further 30 seconds.

Repeat this operation of retraction and extension of the arm until the temperature increases.

Operate the travel and attachment controls three or four times to activate hydraulic fluid circulation.

ENGINE OPERATION

When the engine has started and before beginning work, the following procedure must be observed:

1. Let the engine idle for about five minutes until it has warmed up.
2. Move the engine throttle button to the maximum speed position.

Once normal operating temperature has been reached, check the following:

1. The exhaust smoke is normal.
2. There is no abnormal noise or vibration.
3. There are no oil, fuel or water leaks.

The engine should be run at full speed when operating conditions permit.

The operating speed of the excavator and of the attachment should be controlled by means of the control levers.

Check the indicators and lamps on the instrument panel regularly.

IMPORTANT: *Stop the engine immediately if one of the following situations occurs:*

1. Sudden increase or decrease in engine speed.
2. Abnormal noise.
3. Black smoke at the exhaust.
4. Lighting up of oil pressure, battery, engine electrical circuit (if equipped) indicator lamps on the instrument panel during operation.
5. Lighting up of the overheating indicator lamp on the instrument panel during operation.

PREVIEW - YOUFIXTHIS.COM

Download full manual at youfixthis.com

3. Remove the four bolts (3) that hold the guard plate and place a receptacle of a suitable capacity under the engine sump drain plug, remove the plug (4) and allow the oil to flow into the receptacle.

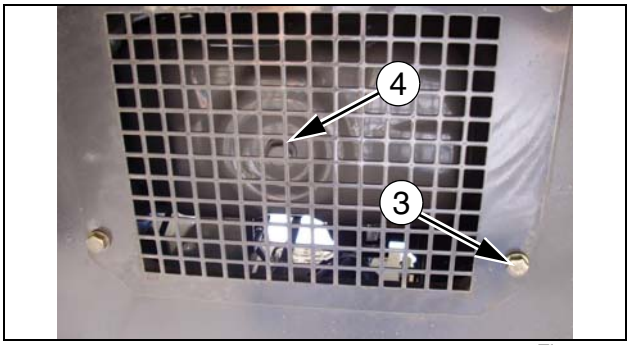

CT02D031 Figure 25

4. Put a new seal on the drain plug (4) and install the plug.
5. Place a receptacle under the pipe (5) at the end, and loosen the screw (6) in order to drain the oil cartridge (7).

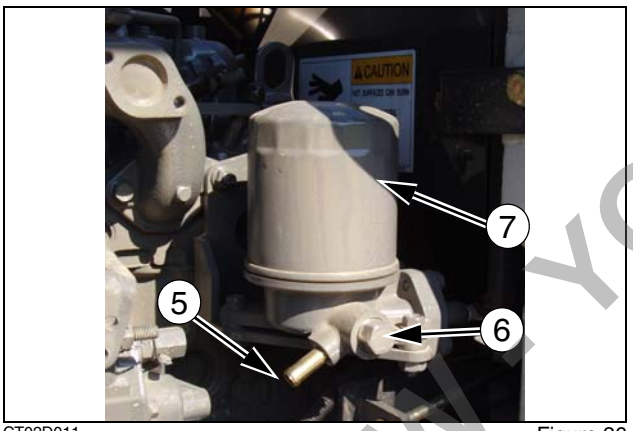

CT02D011 Figure 26

6. Coat the seal of the new filter with a fine film of oil.

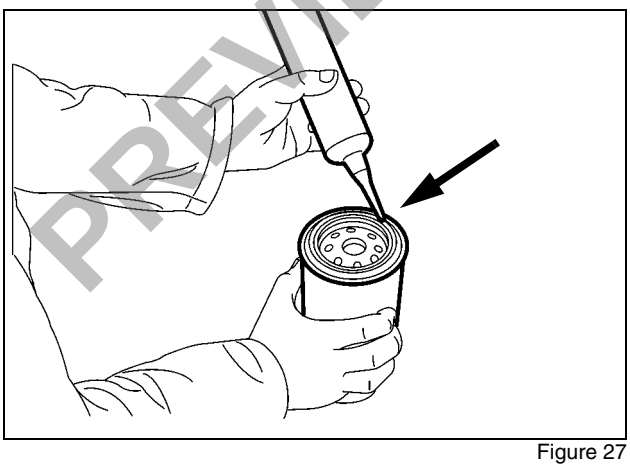

Figure 27

7. Install the new filter. Turn the filter until the seal comes into contact with the filter head then tighten an extra half turn by hand.

IMPORTANT: *Do not use a filter wrench to tighten the filter. Excessive tightening can damage the filter and their seals.*

8. **For machines 080Q3-1101 ~ 080Q3-1206** use the oil cap (8) to fill the engine.

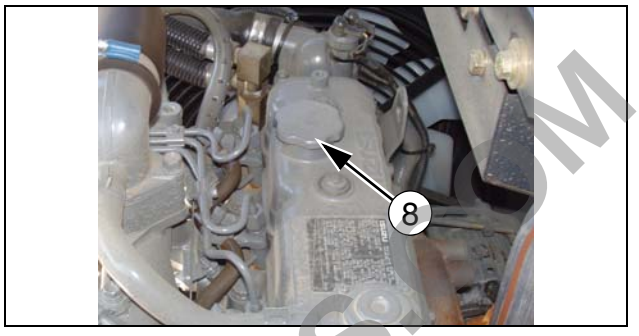

CAUTION: The engine has a closed ventilation system. When filling the oil make sure the oil filler hole is not completely covered, the neck of the funnel or oil pump should not be inserted too deep into the oil filler hole. Add the oil slowly to ensure no damage can occur to your engine.

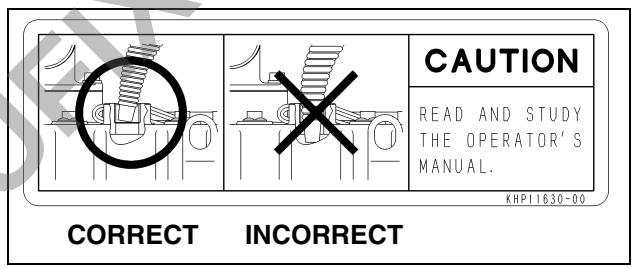

Figure 28

9. **For machines 080Q3-1207 and up** use the dipstick hole(9) and a funnel (10) to fill the engine.

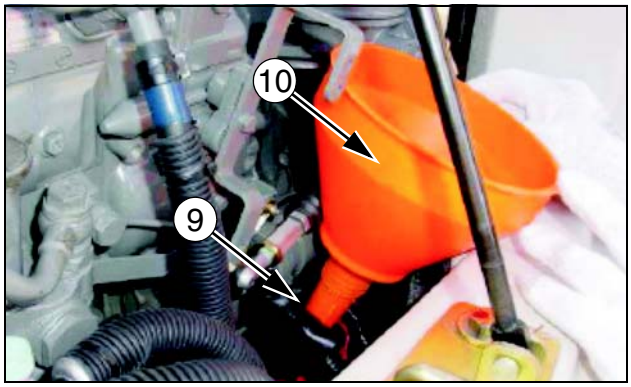

10. Fill the engine with new engine oil (9.6 liters). Install the oil filler cap.
11. Run the engine for a few minutes and check that there are no leaks. Check the level again and top up if necessary.

IMPORTANT: *Always wait fifteen minutes to allow the oil to return to the sump before checking the oil level.*

PREVIEW - YOUFIXTHIS.COM
Download full manual at youfixthis.com

FAN AND ALTERNATOR DRIVE BELT

MAINTENANCE SPECIFICATIONS

Visual check ..... Every 10 hours or every day
Check belt tension ..... Every 250 hours

CHECKING THE TENSION

Use your finger to exert pressure of around 10 kg on the centre of the drive belt. The tension slack should be between about 8 and 12 mm.

NOTE: *Check if there are any signs of wear damage to the pulleys or the belt. Check carefully to ensure that the belt is correctly positioned in the pulley grooves. If the belt is stretched, cracked or frayed, it must be replaced.*

IMPORTANT: *If the engine runs with the belt slack, the belt can slip in its housing and cause the engine to overheat or the battery to receive insufficient charge.*

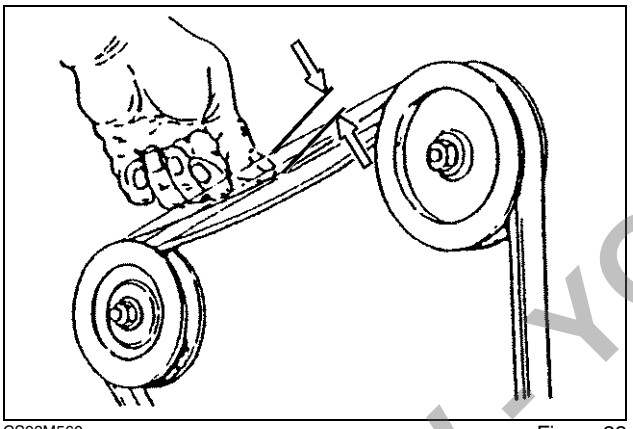

CS98M560 Figure 23

ADJUSTING THE TENSION

Remove the mounting bolts (1). Use the adjustment screws (2) to move the alternator outwards until belt tension is correct. Tighten the alternator mounting bolts (1).

Only one belt.

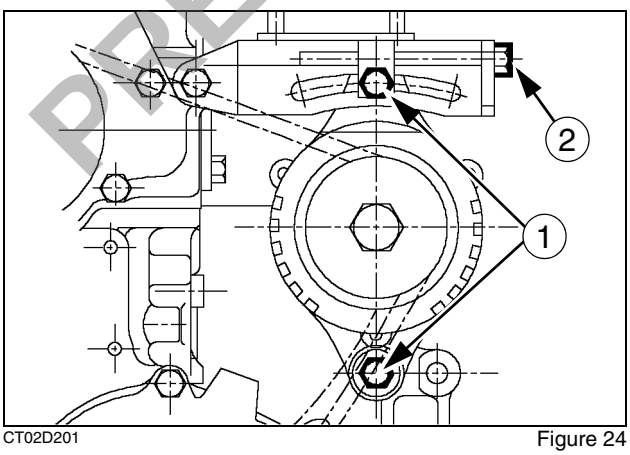

CT02D201 Figure 24

REPLACING THE BELT

If one or more belts break, the battery load indicator lights up on the instrument panel. Shut down the engine, remove the starter switch key and change the belt.

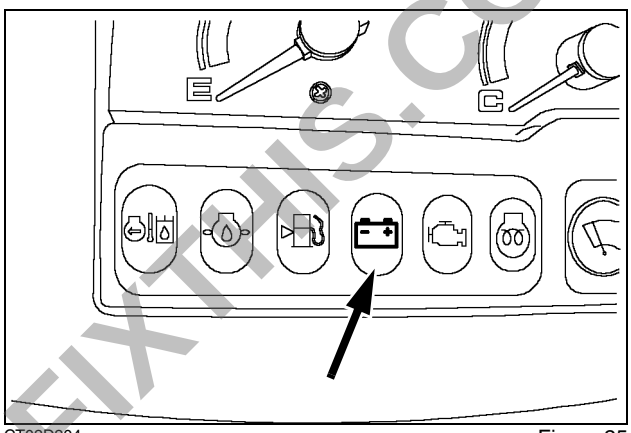

CT02D204 Figure 25

1. Remove the mounting bolts (1). Use the adjustment screws (2) to push the alternator inwards.
2. Remove the belts that are worn out.
3. Install one or two new belts.
4. Adjust the belts using the screw (2).
5. Tighten the mounting bolts (1).
6. Run the engine for about an hour and then check the belt tension again.

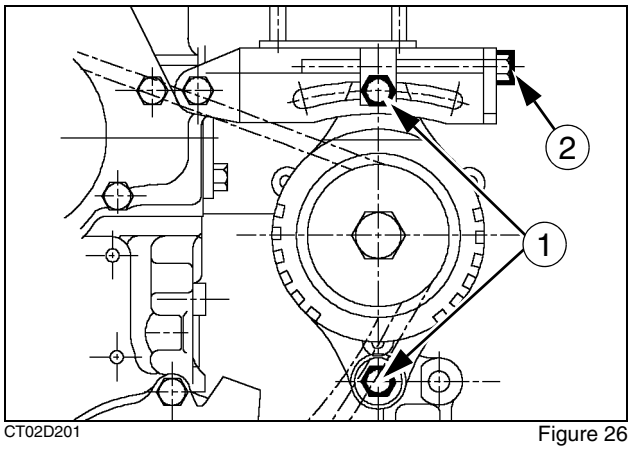

CT02D201 Figure 26

PREVIEW - YOUFIXTHIS.COM

Download full manual at youfixthis.com

PREVIEW ONLY

You're viewing 12 of 158 pages

The full manual includes:

- All 158 pages, complete
- Searchable PDF (find any keyword)
- No watermarks
- Instant download
- Print-ready quality

GET FULL MANUAL NOW

Link-belt 80, SPIN ACE, SPIN ACE 80 Operator Manual

Scan or click anywhere
youfixthis.com

Click anywhere on this page to get the full manual