BRANCH CONTENTS

SECTION 1 General and outline

1) Caution for Inspection and Maintenance 80-01-101-00

2) Basic Rules 80-02-101-00

① General Rules for Disassembling

② General Rules for Reassembling

③ Handling of the Interchangeable (Common) Parts

④ Conversion Tables

3) Circuit Diagram

(1) Hydraulic circuit (For Blade) 80-03-106-10

Hydraulic circuit (For Offset) 80-03-107-10

(2) Electric circuit 80-03-206-10

4) Performance Standards 80-04-101-20

5) Measuring Pressure 80-05-101-20

① Accumulator

② Hydraulic System Relied Valve Adjustment

③ Main Relief Pressure

④ Main Control Valve Port Relief Pressure

⑤ Pilot Circuit Pressure

⑥ Swing Cross Over Relief Pressure

6) Points to Note for Replacement of Main Hydraulic Device 80-06-101-10

① Hydraulic Oil Pressure Release

② Hydraulic Pump

③ Swing Motor

④ Travel Motor

⑤ Hydraulic Cylinder

PREVIEW - YOUFIXTHIS.COM

Download full manual at youfixthis.com

1 Travel device

1-1 Removal and Installation

1-1-1 Removal

1	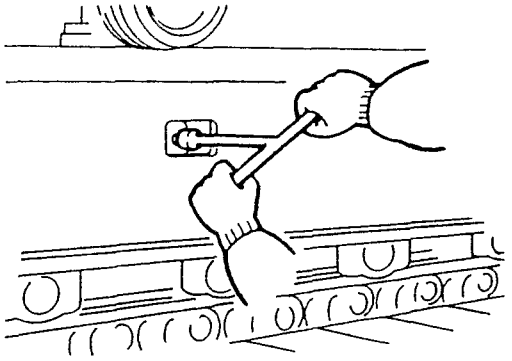	Loosen the check valve to bleed out grease **⚠WARNING** When loosening the check valve, loosen a little at a time, and stop when the grease comes out. (The grease is under extremely high pressure, so rapid-loosening may cause the grease to spurt out, or the plug to come flying out)
2	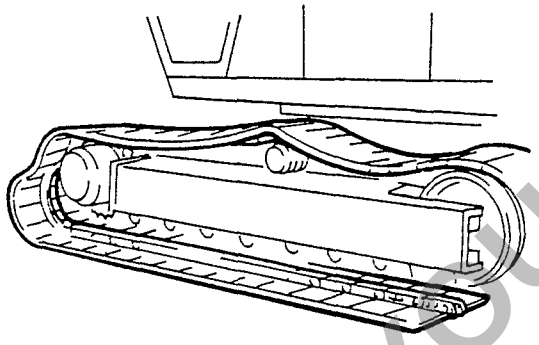	Disconnect the track link
3	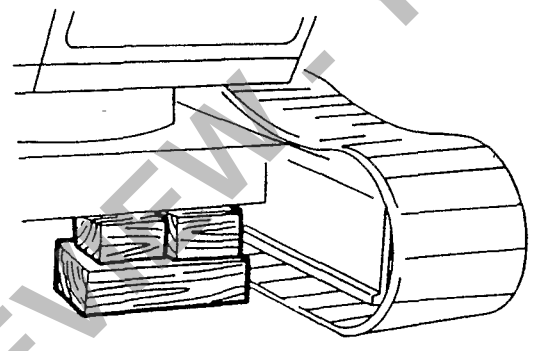	Lift the side of unit high enough to permit drive sprocket removal. Put wooden blocks under unit.
4	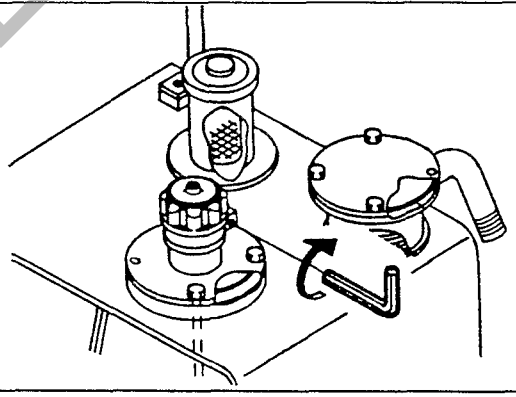	Stop the engine and operate the control lever to relieve pressure in the hydraulic system. Loosen the air breather cap to release pressure in hydraulic tank. Note: For the pressure releasing procedure, refer to Item "Hydraulic oil pressure release."

PREVIEW - YOUFIXTHIS.COM

Download full manual at youfixthis.com

4-4 Disassembly and Reassembly

4-4-1 Disassembly

1) Preparation

Make the following preparations prior to disassembly

a) Workbench with vise

The workbench must have enough space to place and hold parts during work. Soft jaws are needed for the vise

b) Tools and supplies

Prepare the tools and supplies shown in 4-3

2) General Precautions

a) Use care in handling precision-made parts during work to avoid damage caused by striking other parts or from being dropped.

b) Never strike or prize parts forcibly when they are held fast, so as to prevent damage, burring, oil leakage or lowered performance. Use care and patience

c) Protect parts from corrosion and dust when disassembly is interrupted for some time. Parts rust easily due to moisture or dust when left disassembled

3) Disassembly procedure

1 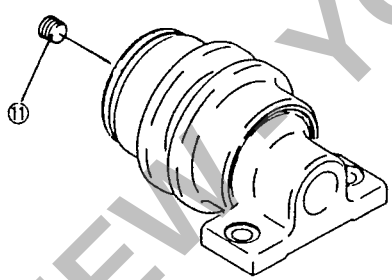	1) Clean the upper roller with kerosene 2) Remove the plug ⑪ from cover and drain the oil.
2 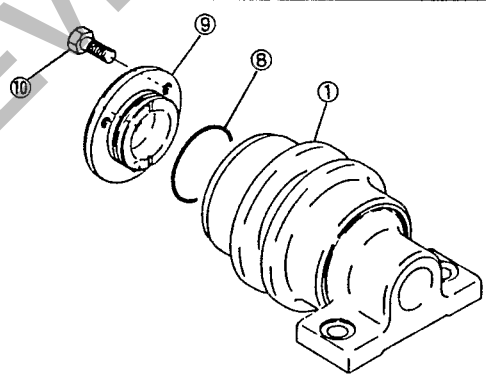	1) Remove the bolt ⑩ and cover ⑨ from upper roller ① 2) Remove the O-ring ⑧ from cover ⑨ **⚠CAUTION** Do not reuse O-ring ⑧.

PREVIEW - YOUFIXTHIS.COM
Download full manual at youfixthis.com

6-3-2 Reassembly procedure-cont.

5	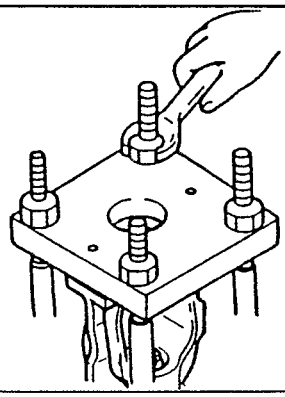	Install and tighten the nuts to hold the recoil spring assembly
6	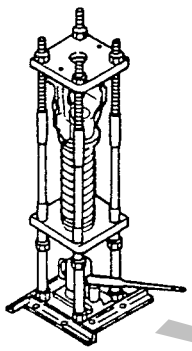	Operate the oil jack and compress the spring.
7	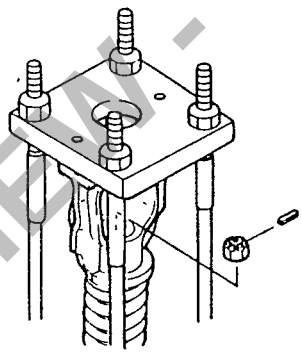	Install the nut on the rod, and install the spring pin.
8	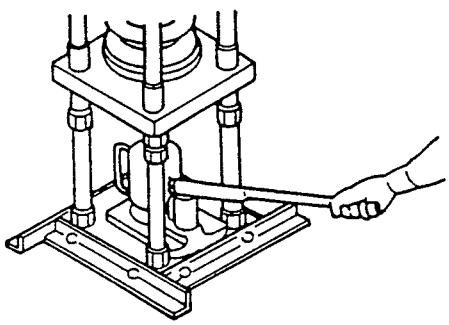	Let the jack down to relieve presure on the spring.

PREVIEW - YOUFIXTHIS.COM
Download full manual at youfixthis.com

9 Rotating joint

9-1 Removal and installation

9-1-1 Removal

1	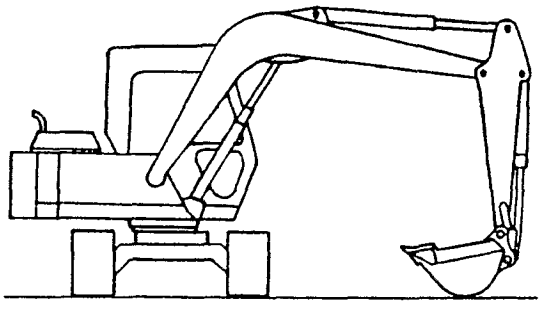	Park the machine on level ground
2	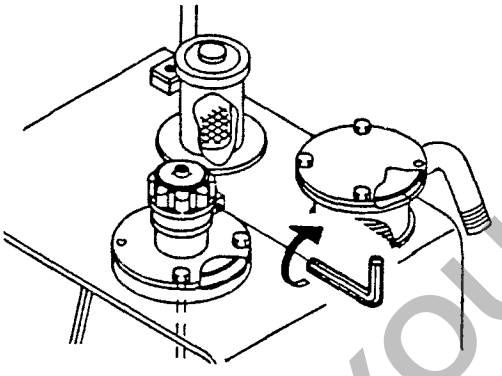	Stop the engine, and operate the control lever to relieve pressure in the hydraulic system Loosen the air breather cap to release pressure in the hydraulic tank. Note. For the pressure releasing procedure, refer to Item "Hydraulic oil pressure relrease"
3	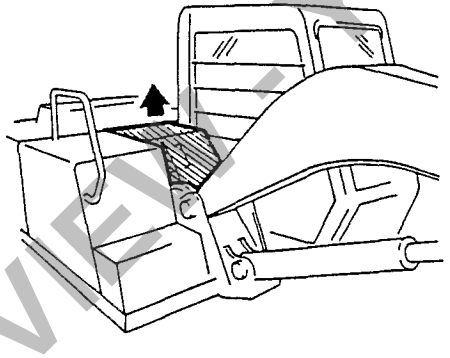	Remove the covers (center cover, etc)
4	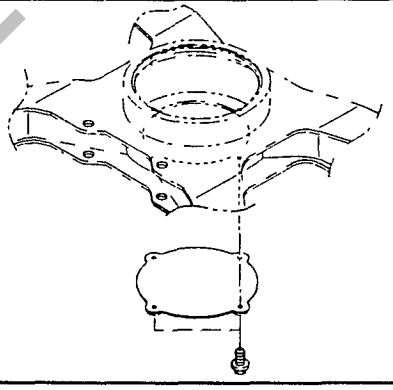	Remove the lower under cover.

PREVIEW - YOUFIXTHIS.COM

Download full manual at youfixthis.com

1 Bucket cylinder

1-1 Removal and Installation

1-1-1 Removal

1	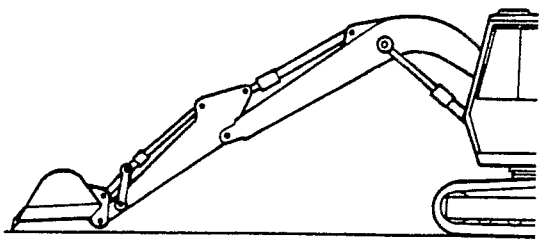	Park the machine on level ground
2	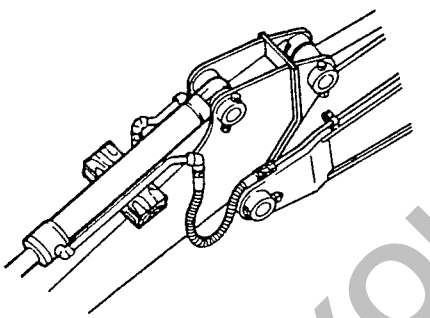	Put a wooden block under the bucket cylinder
3	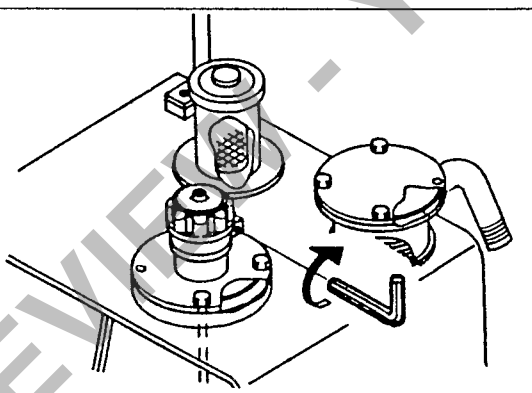	Stop the engine and operate the control levers to relieve pressure in the hydraulic system. Loosen the air breather cap to release pressure in hydraulic tank. Note. For the pressure releasing procedure, refer to the item "Hydraulic oil pressure release".
4	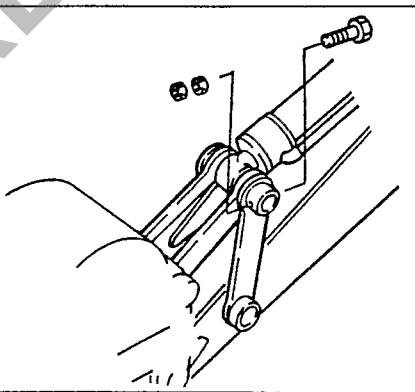	Remove the nuts and bolt

PREVIEW - YOUFIXTHIS.COM

Download full manual at youfixthis.com

4-1-2 Installation-cont

5	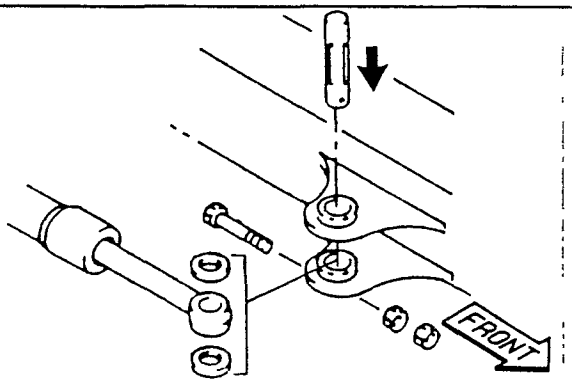	Install the pin, bolt and nuts. Note: Stroke the cylinder to purge the entrapped air After purging the air, check for oil leakage.

PREVIEW - YOUFIXTHIS.COM

Download full manual at youfixthis.com

4-2 Disassembly and replacement-cont.

5	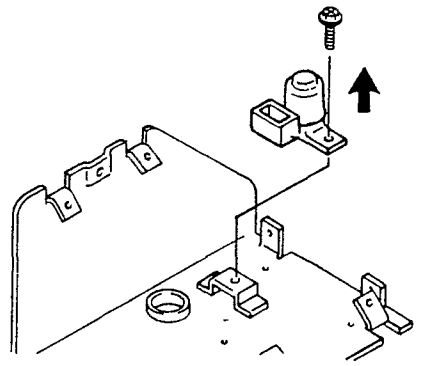	2) Remove the screws, and remove the buzzer from the bracket for replacement.

PREVIEW - YOUFIXTHIS.COM

Download full manual at youfixthis.com

⑱ Remove the rotary group (on the front side)



⑲ Remove the plug
(Hex. socket wrench 22(0.87″)

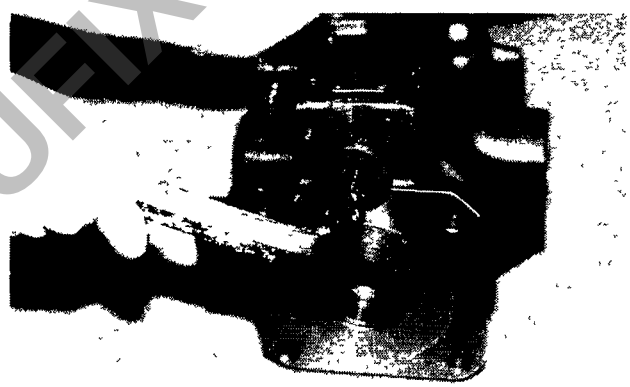

⑳ Remove the distance piece.

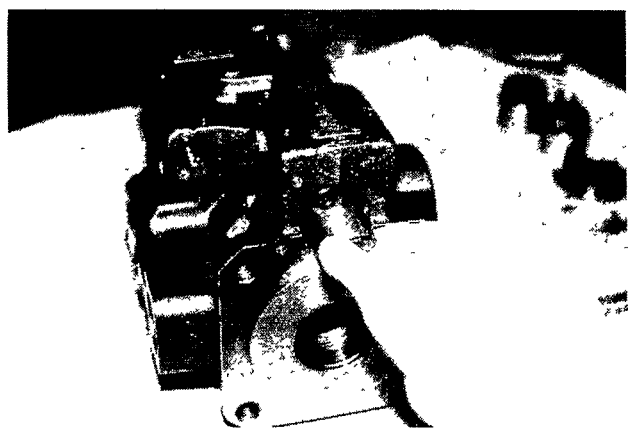

PREVIEW - YOUFIXTHIS.COM

Download full manual at youfixthis.com

2-1-2 Installation

1	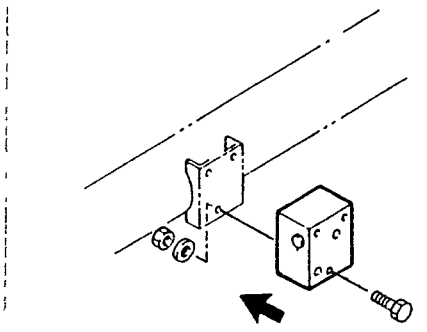	Align the valve to the boom cylinder mounting position, and fasten it with the bolts
2	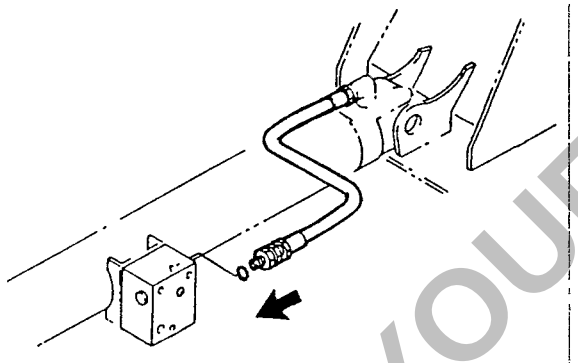	Install the boom hoist line to the holding valve.
3	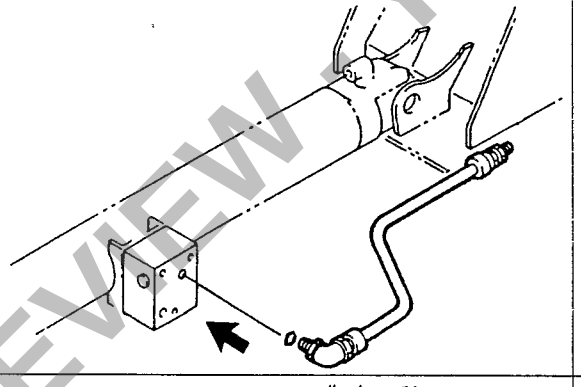	Install the boom line to the holding valve.
4	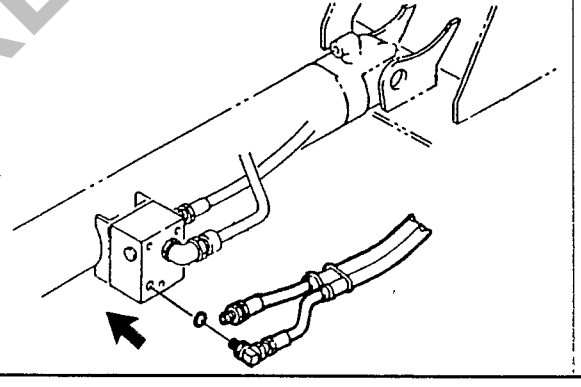	Connect the pilot hose. Note. After installation, check for oil leakage. Also slowly stroke the cylinder to release air.

PREVIEW - YOUFIXTHIS.COM

Download full manual at youfixthis.com

2-1-1 Removal-cont.

5	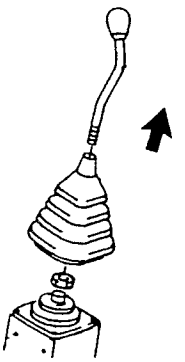	Loosen the lock nut, and remove the hand lever (with the boot knob cable)
6	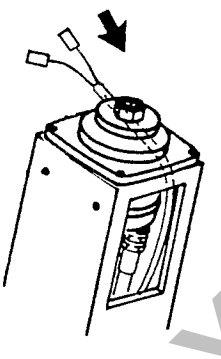	Pull out the switch cable through the through hole of the pilot valve (Take sufficient care to prevent scoring the cable.)
7	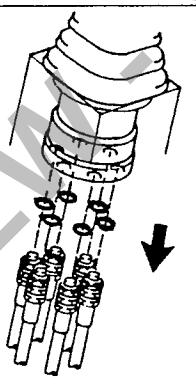	Disconnect six hoses from the pilot valves Note: Mark all hoses for indentification during reassembly.
8	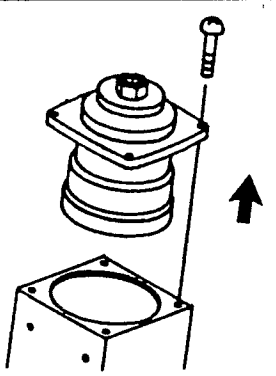	Remove the mounting bolts, and remove the pilot valve.

PREVIEW - YOUFIXTHIS.COM

Download full manual at youfixthis.com

6-1-2 Installation-cont.

5	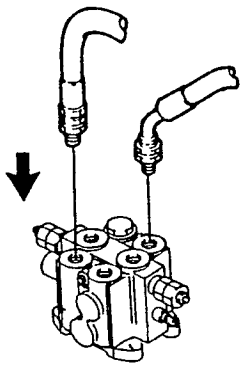	Install the pressure line hoses to the stack valve. Note: After installation, check for oil leakage
6	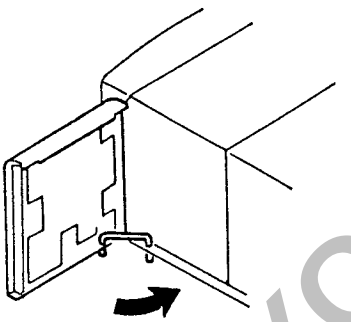	Close the R H side door.

PREVIEW - YOUFIXTHIS.COM

Download full manual at youfixthis.com

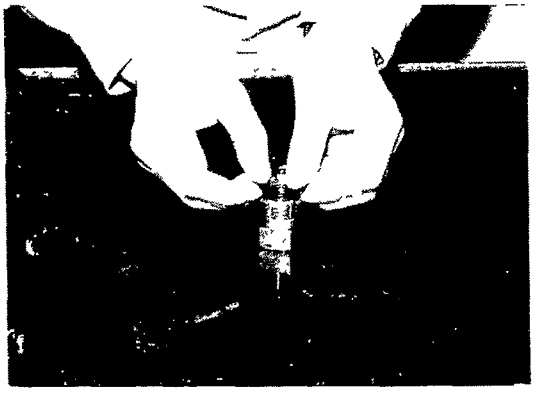

④ Remove the O-ring [136] from the plug [174]

⚠ • Don't reuse the removed O-ring [136]



(10) Disassembly of pilot valve in the rear flange

① Insert the sharp-pointed punch into the notch of the ring [165], and hit the ring [165] with a hammer for removal.



② Face the hole of the removed ring toward the bottom and raise the rear flange [101] and the stopper [164], the spring [166] and valve [163] can be removed from the rear flange.

⚠ • Remove the ring [165] only when replacement of the pilot valve is required.
• Since the hole is damaged when the ring [165] is removed, repair the hole after removal.

• If it is not removed even though the hole is faced toward the bottom, slowly apply compressed air from the 2-speed switch port for removal.
• Don't reuse the removed O-ring [165]

(11) Removal of plug

① Unless necessary, never attempt to disassemble the plug [152].
If it improperly operates due to dust or similar, remove the plug [152] and wash the oil port.
At this time, take care to prevent dropping the steel ball [168].

PREVIEW - YOUFIXTHIS.COM
Download full manual at youfixthis.com

3-2 Inspection and measurement

(1) Measuring procedure
Execute the measurement in an area which is as free of contaminants and dust as possible

(2) Preparation for measurement
① Arrange the objects on the surface plate after washing them with washing liquid or light oil
② Keep the temperatures of the room and object at 18~22℃ (64 4~71 6° F)

(3) Measurement
① Make the measurement on the surface plate of JIS Class 2 or higher
② Repeat the measurement as carefully as possible two or more times

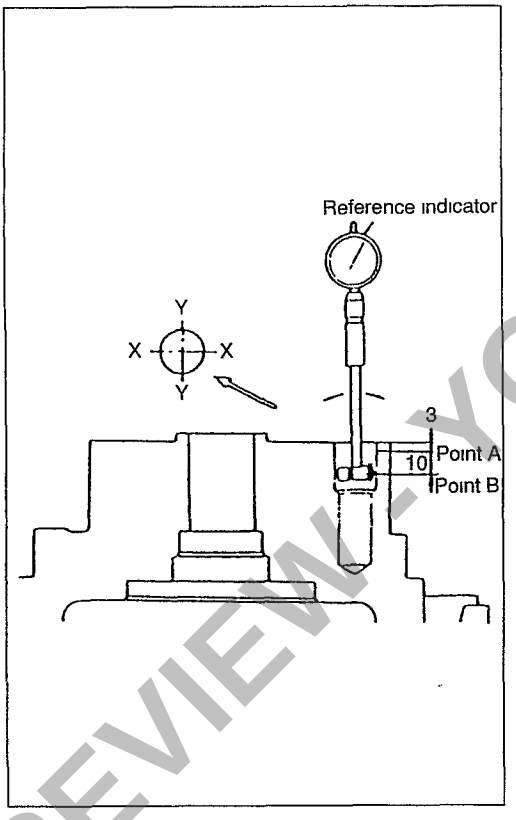

(4) Measurement of reamer hole bore diameter of spindle [2]
① Attach the indicator (scale dial gauge: JIS B 7509 1mm) to the cylinder gauge (measurable range. 18 to 35mm)
② Bring the contactor and rod into contact with the ring gauge (inner diameter: 19mm), and align the character of the dial scale to zero in order to zero the minimum value which is indicated by the long needle of the dial gauge.
③ Measure the bore diameter of the reamer hole.

⚠ • For zero point adjustment and measurement, hold the grip of the cylinder gauge, fix the end of the replacement rod at the measured point and swing the contactor side three times or more. While swinging, read the minimum value.
• Make the measurements in the X and Y directions of areas A and B of the three reamer holes.

PREVIEW - YOUFIXTHIS.COM

Download full manual at youfixthis.com

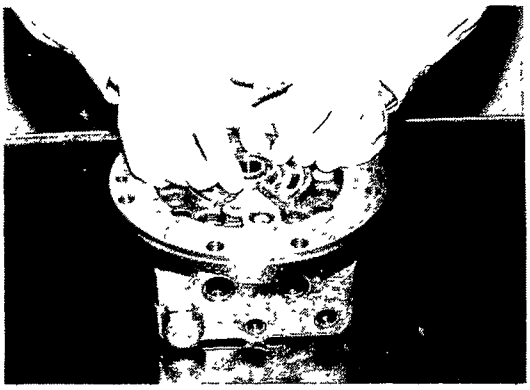

③ Insert the deep groove ball bearing [150] into the rear flange [101].
At this time, coat hydraulic oil on the deep groove ball bearing [150]

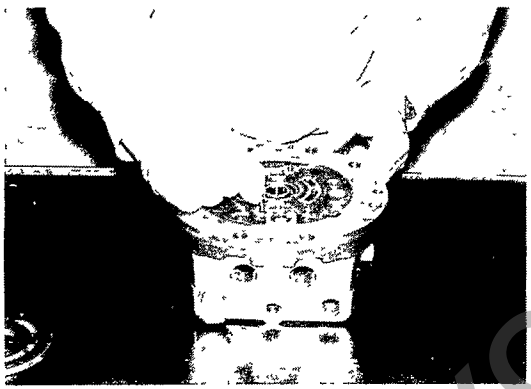

④ Insert two parallel pins [141] into the pin holes of the rear flange [101].

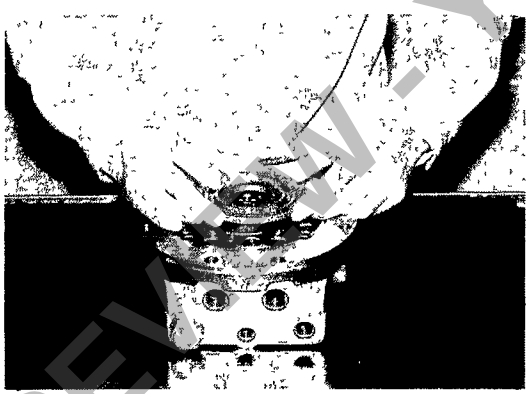

⑤ Coat grease on the joining surface of the timing plate [109] for the rear flange.

⑥ Using the parallel pins as a guide, install the timing plate [109] on the rear flange [101].

⚠ • Install the timing plate [109] until it comes into close contact with the rear flange [101].
The rear flange is in close contact with the spindle [2] to prevent the timing plate from dropping from the rear flange.

PREVIEW - YOUFIXTHIS.COM

Download full manual at youfixthis.com

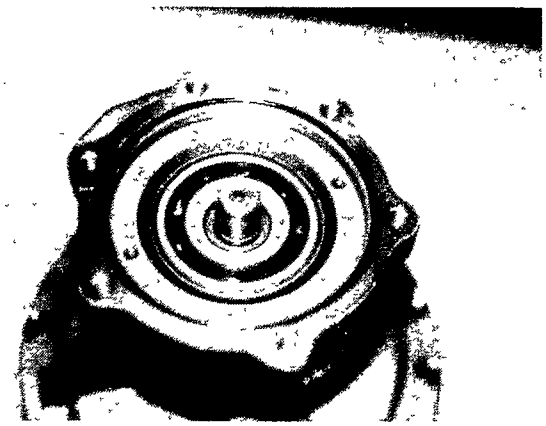

(33) Insert the O-ring of the joining surface.

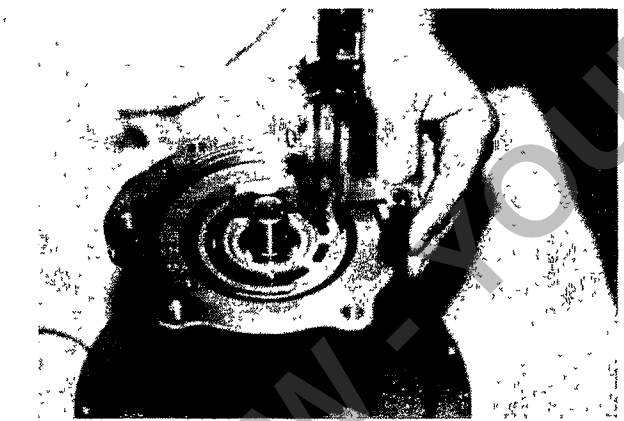

(34) Check whether the rotary group is assembled in position or not

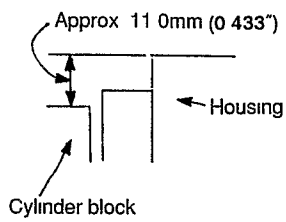

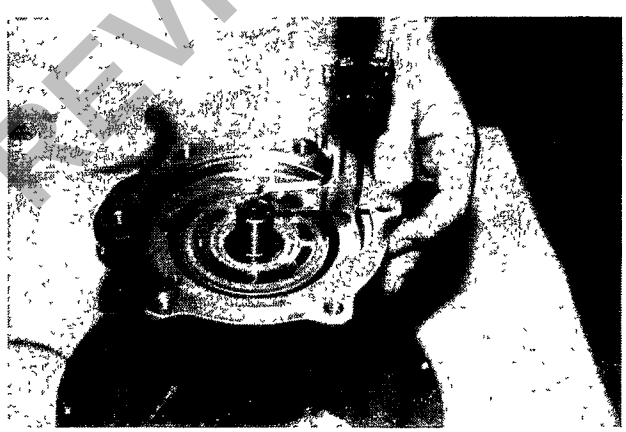

(35) Check whether the ring and piston are assembled in position or not.

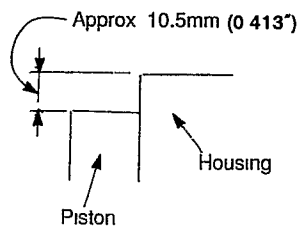

PREVIEW - YOUFIXTHIS.COM
Download full manual at youfixthis.com

5. Storage standard

The hydraulic cylinder is completely maintained at delivery from the factory. Take care for the following ite to prevent any trouble during storage and to extend the service life.

1) Storage as a single unit (indoor storage as a rule)

Avoid an area exposed to high-temperature, high-humidity, corrosive gas/liquid or similar, and store the cylinder off the floor. In order to prevent condensation, due to the temperature difference, the hydraulic cylinder was factory-tested with a test oil which was added with volatile corrosion inhibitor, and the piston rod was contracted with extra-dry air (condensation point: –35 ℃ (–31 ° F) or less) and sealed with cap for delivery.

Don't remove the cap or drain the oil from the cylinder purposelessly.

Storage of 2 months or more	Storage of 6 months or more (3 months for the single-action cylinder)	Storage of 1 year or more
1 Clean the cylinder of contaminants and coat rust-preventive oil on the pin bushing, flange area, piston rod and other places which are likely to rust.	1. Fill clean hydraulic oil, extend and retract the cylinder and fill rust-preventive oil into the cylinder and service the cylinder according to the 2 months or longer storage described on the left 2 If the cylinder can not be operated, at least with fill rust-preventive oil.	1 Since the packing may be deteriorated, it is desirable to disassemble the cylinder for inspection and replace the packings, etc 2 If any cylinder which has been stored for a long time is used as it is, oil may leak due to the temporarily unsuitable fitting of the seals, etc
2. Take sufficient care to prevent the cylinder from exposure to dropping, collision, etc	3. Same as on the left	3. Same as on the left.

2) Installed on the excavator.

1. Operate the cylinder at least once per month.
2 Retract the piston rod as much as possible to prevent it from exposure to the atmospheric air, and coat rust-preventive oil or grease on the exposed area at least once per month.
3. During handling, be careful to prevent damaging the piston rod.
4. If it is placed in a rust generating environment such as sea wind, etc. for export, etc., be sure to coat rust-preventive oil on the piston rod and protect it with polyethylene or V.C.I. paper as soon as possible.
5. Since some rust-preventive oil or similar solvents may have an adverse effect on the rubber, parets, take sufficient care for selection and prevent the oil from sticking to the dust seal, etc. as much as possible.

PREVIEW - YOUFIXTHIS.COM

Download full manual at youfixthis.com

No	Operation	Cautions
4	Mount the washers ㉑⑦, springs ㉑④① and spring seats ㉑⑥ in order onto the spools ㉑⓪① 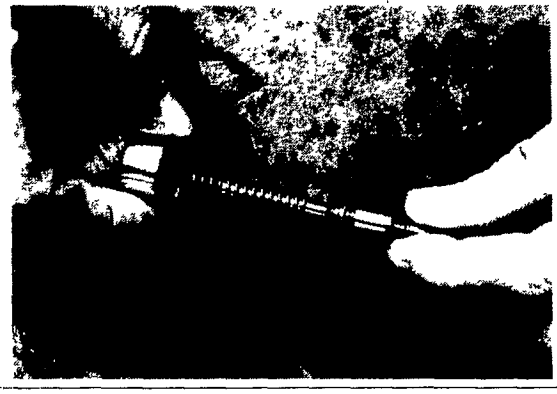	
5	Stand each spool ㉑⓪① on a level work bench, push the spring seat ㉑⑥ up and insert the two semicircular washers 1㉑⑤ into the top of the spring seat, such that they do not overlap 	Do not pull down the spring seat by more than 6mm
6	Mount the return springs ㉒① into the casing Mount the pressure reduction assembly into the casing 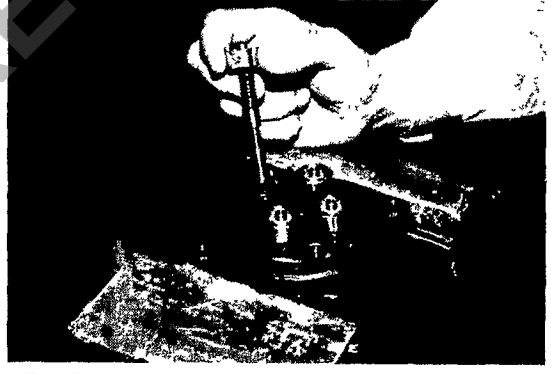	Assemble in the same positions as before disassembly

PREVIEW YOUFIXTHIS.COM

Download full manual at youfixthis.com

PREVIEW ONLY

You're viewing 18 of 474 pages

The full manual includes:

- All 474 pages, complete
- Searchable PDF (find any keyword)
- No watermarks
- Instant download
- Print-ready quality

GET FULL MANUAL NOW

Link-belt LS-1600 Technical Manual

Scan or click anywhere
youfixthis.com

Click anywhere on this page to get the full manual