Prevention of fire

- For washing parts, use non flammable solvent Gasoline and kerosene are flammable and dangerous
- Prohibit smoking during washing

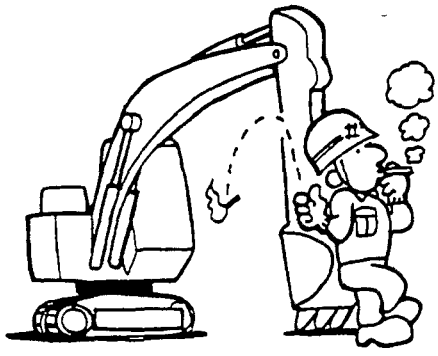

For inspecting the machine

- Park the machine on hard, flat ground
- Lower the attachment to ground

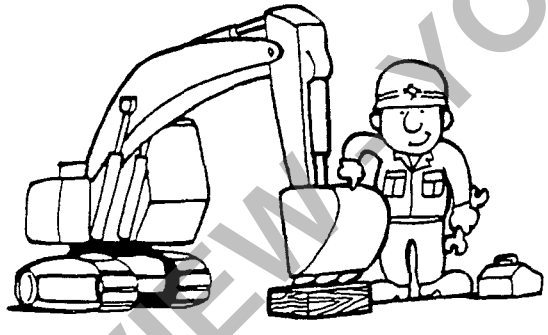

⚠ CAUTION

To carry out inspection with the attachment in the air for some unavoidable reasons, place safety block or pillar underneath

Do not work on machine while in motion.

- Maintenance on a moving machine may cause severe personal injury

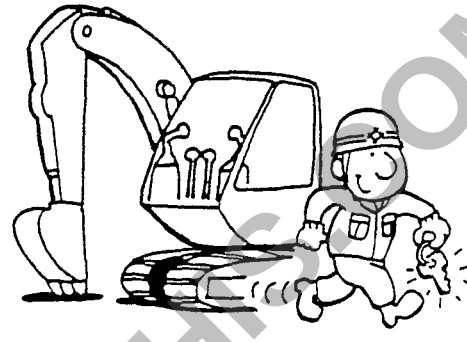

⚠ CAUTION

Particulary be careful about rotating machinery such as fan, etc. so that your clothes will not be caught in it

If performing maintenance underneath the machine . . . ??

- Put the "UNDER INSPECTION/MAINTENANCE" sign on operator's seat
- Carry out inspection and maintenance work with more than 2 people together

And Always keep in mind what the other workers are doing

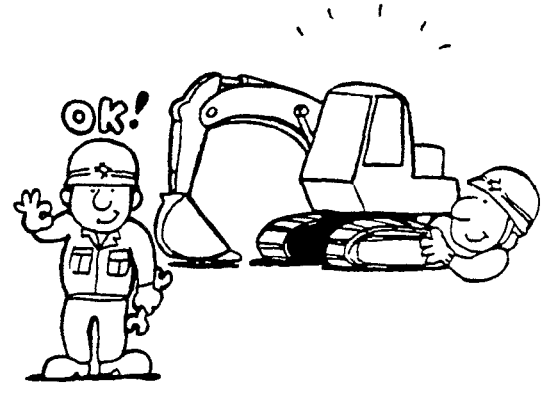

PREVIEW ONLY YOUFIXTHIS.COM

Download full manual at youfixthis.com

Disassembling procedure	Cautionary points during disassembling
7. Cylinder block S/A disassembling a. Keeping the case (1) horizontally placed on the working base, pull out the cylinder block S/A from the case (1). ∘ Components of cylinder block S/A (4) Cylinder block C/B (6) Piston S/A (7) Retainer plate (8) Retainer holder (14) Snap ring (15) Spring seat (16) Spring ring (17) Collar (19) Pin 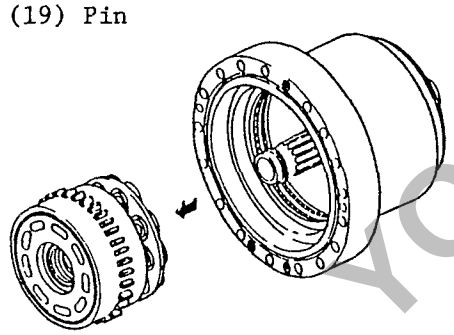 b. Pull out the piston S/A (6) from the cylinder block (4), remove the retainer plate (7), retainer holder (8) and pin (19), and disassemble the cylinder block S/A. 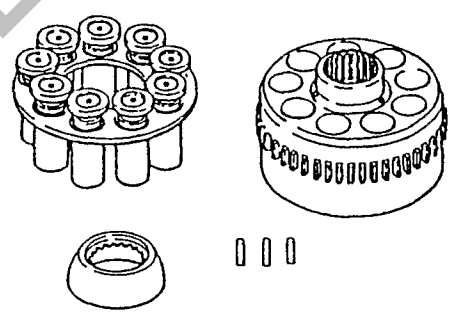	

PREVIEW - YOUFIXTHIS.COM

Download full manual at youfixthis.com

Assembling procedure	Cautions during assembling
4. Case (1) assembling Place the suitable jig on the work bench, and place the case (1) on the jig. 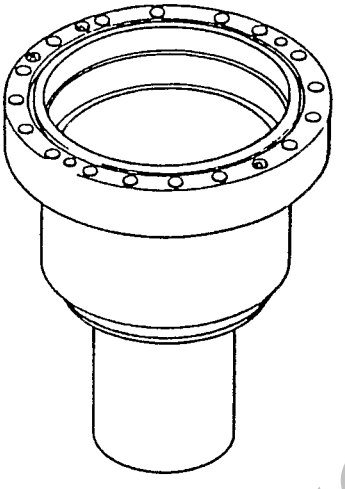 a.Fit the outer race of the roller bearing (12) to the case (1). 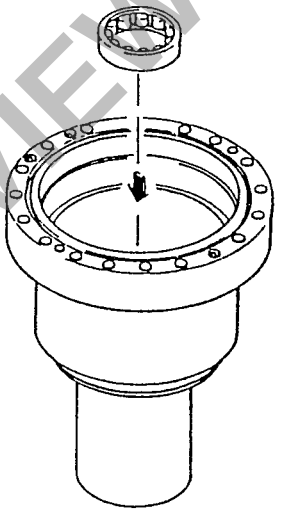	Applicable jig No.30 Motor fixing tool

PREVIEW - YOUFIXTHIS.COM

Download full manual at youfixthis.com

Disassembling procedure	Cautionary points during disassembling
2. Gear disassembling a) Remove the thrust plate (23), and remove the drive gear (4) and holder A S/A. 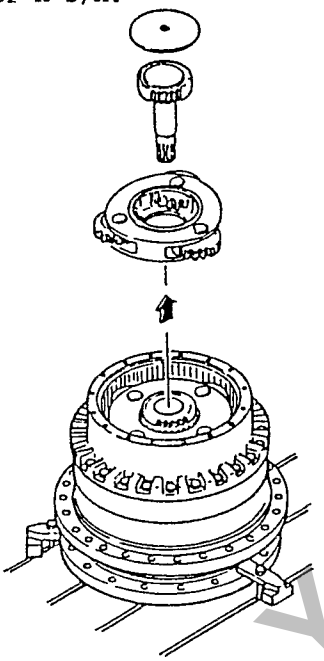 b) Remove the sun gear B (6) and holder B S/A (2). 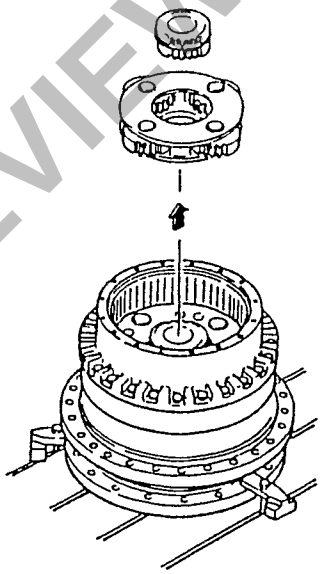	

PREVIEW - YOUFIXTHIS.COM

Download full manual at youfixthis.com

Assembling procedure	Cautionary points during assembling
8. Assemble sun gear C (8), holder B S/A (2) and sun gear B (6) in this order. 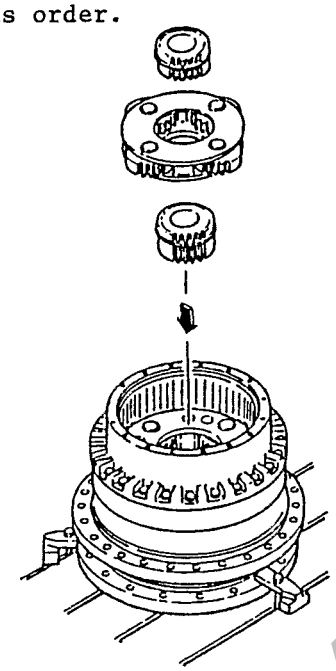 9. Coat grease on the thrust plate (5), and assemble holder A S/A (1). 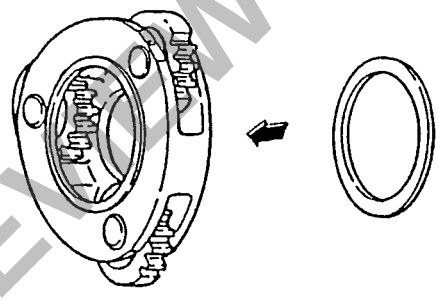	

PREVIEW - YOUFIXTHIS.COM

Download full manual at youfixthis.com



4) Loosen bolt ① with a ratchet handle and socket, then remove bolt ①, spring washer ② and cover ③ from roller ⑩



5) Remove O-ring ⑦ from cover ③

⚠ CAUTION

Do not reuse O-ring ⑦.



6) Set shaft ⑪ in a vise, loosen bolts ⑤ with a ratchet handle and socket, then remove bolts ⑤ washers ⑥ and thrust washers ⑧ from shaft ⑪

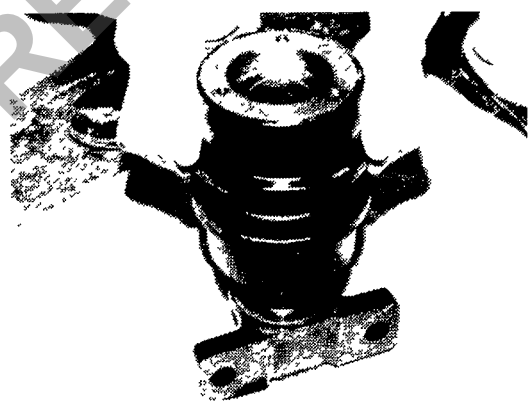

7) Pull roller ⑩ out of shaft ⑪

PREVIEW - YOUFIXTHIS.COM

Download full manual at youfixthis.com

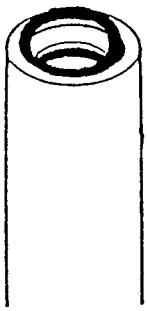

3) Remove dust seal ① from cylinder ⑤ using a drive and hand hammer.

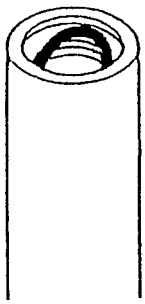

4) Remove O-ring ③ and backup rings ② from piston ④.

⚠ CAUTION

- Do not reuse O-rings ③ and backup rings ②.

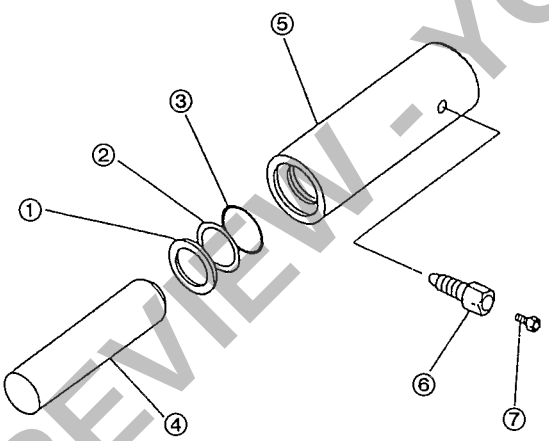

5) Cleaning of parts

① Rough cleaning

a) Place parts in a rough cleaning vessel containing kerosene.

⚠ CAUTION

- Cleaning parts in kerosine with contaminants attached can cause scratches. Soak until dirt and grease become loose and float

② Finish cleaning

a) Place all parts in a finish cleaning vessel containing kerosene and clean both in and outside thoroughly while slowly rotating the parts.

b) Wipe off kerosene with clean waste cloth.

⚠ CAUTION

- Dry cylinder ⑤ with compressed air in a place free from dust and moisture.
- Apply a coat of hydraulic oil to all parts after drying.

PREVIEW - YOUFIXTHIS.COM

Download full manual at youfixthis.com

No.	Reassembling procedure	Notes for reassembling
9	Install the O-ring ㊼ in the casing ㉚ 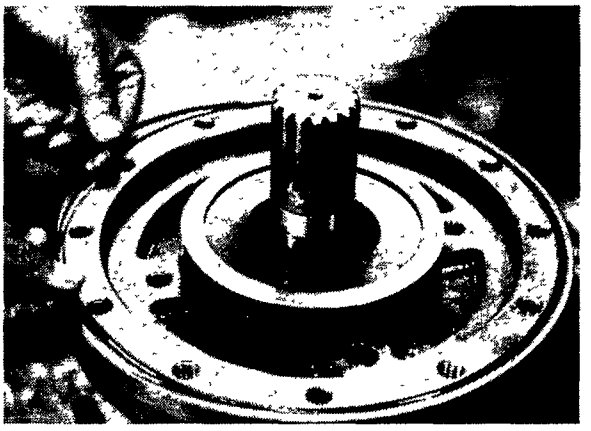	
10	(This item is required only if the oil seal has been removed.) Insert the oil seal ㊾ in the front cover ㉚ using a jig 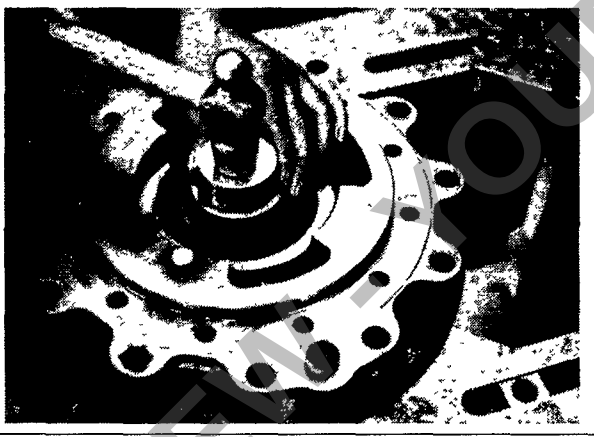	Be careful of the direction of the oil seal. (Refer to the structural drawing.)
11	Install the O-ring ㊼ in the front cover ㉚. 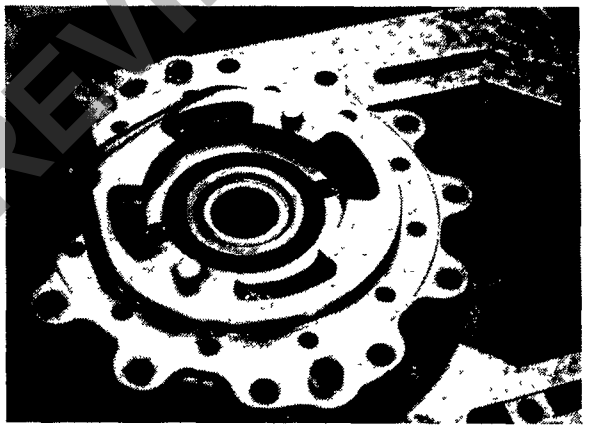	

PREVIEW - YOUFIXTHIS.COM

Download full manual at youfixthis.com

Rear view of the pump.

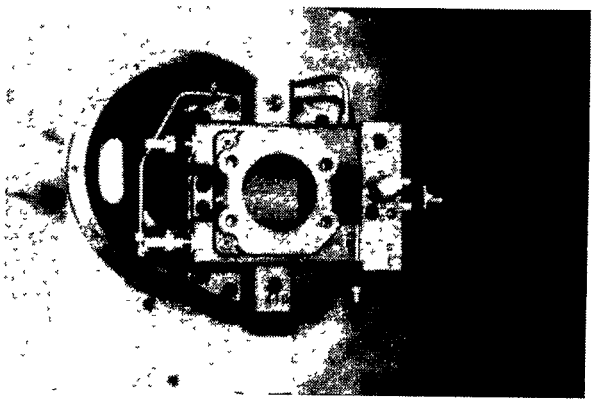

No 1-8

4 2 2 Removal of the pilot valve piping

Loosen the two hexagonal socket head cap bolts (H5-10) and remove the clamp

[4mm A/F Allen wrench]



No 1-9

Loosen the two nuts and remove the pilot valve piping

[22mm A/F Allen wrench]

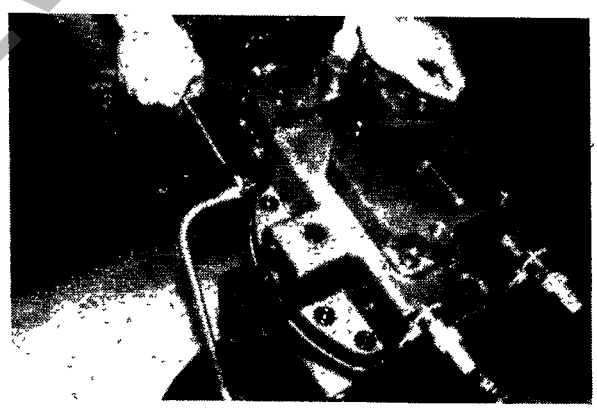

No 1-10

PREVIEW - YOUFIXTHIS.COM

Download full manual at youfixthis.com

[Disassembly of the control unit]

Remove the sealing caps

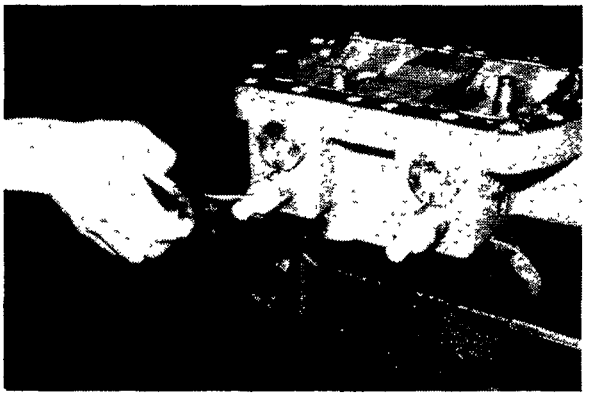

No.2-14

Remove the guides with the adjusting screw and hexagonal nut attached [24mm A/F spanner wrench]



No 2-16

Remove the two springs

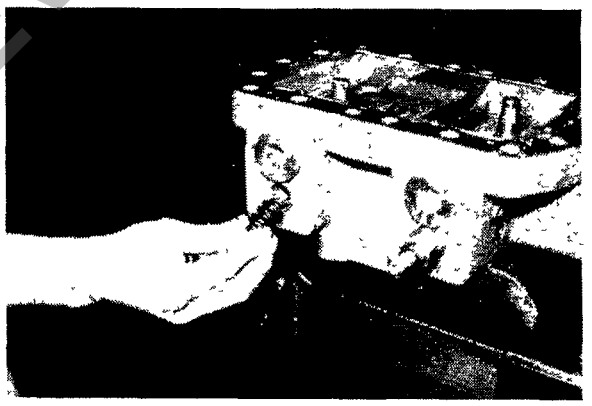

No 2-17

PREVIEW - YOUFIXTHIS.COM
Download full manual at youfixthis.com

Lift out the guide with the tip of a straight screwdriver.

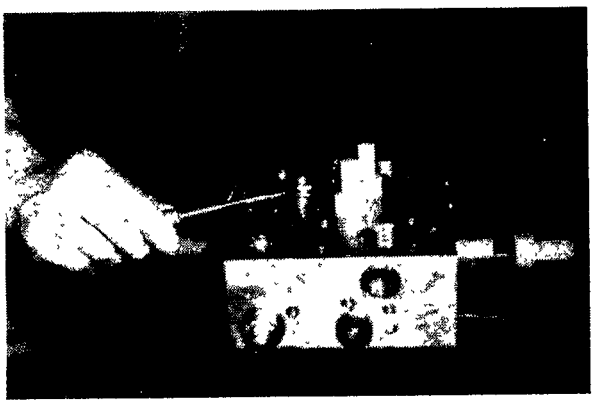

No 4-11

[Disassembly of the cut-off valve]

Remove the sealing cap and remove the guide with the adjusting screw and hexagonal nut attached.

The spring seat is contained in the guide.

[29 mm A/F spanner wrench]



No 4-14

Remove the spring

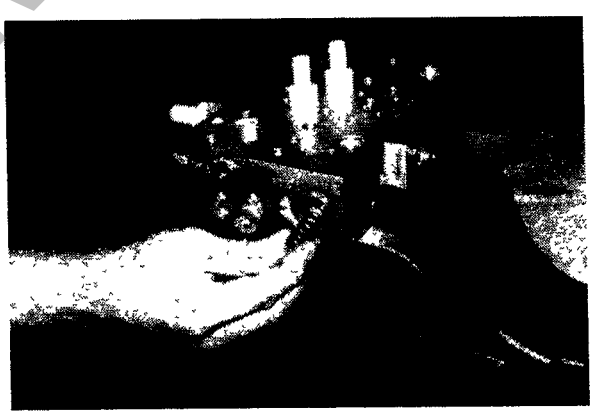

No 4-15

PREVIEW - YOUFIXTHIS.COM

Download full manual at youfixthis.com

[Removal of the relief valve]

Remove the relief valve by turning it with a spanner on the hexagonal section.

[29mm A/F spanner wrench]

Also remove the filter at the tip of the relief valve

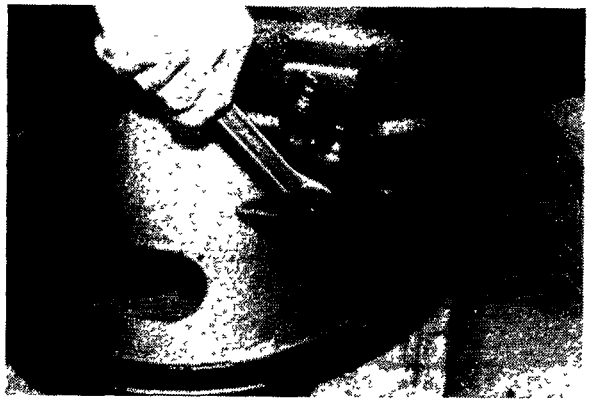

No 3-22

4 2 6 Removal of the pilot gear pump

Remove the two hexagonal socket head cap bolts (M10 × 30, M10 × 50).

[8mm A/F Allen wrench]



No. 1-21

Remove the pilot pump.

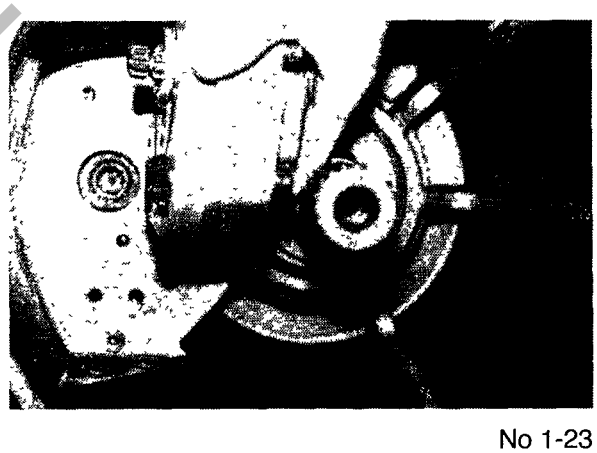

No 1-23

PREVIEW YOUFIXTHIS.COM
Download full manual at youfixthis.com

No	Operation	Cautions
4	Loosen the lock nut and the adjusting nut ㉛ with a spanner, and remove the entire handle assembly.	
5	Put spanners on the adjusting nut ㉛ and on the flats on the disk ㉜ and remove them  	

PREVIEW YOUFIXTHIS.COM

Download full manual at youfixthis.com

No.	Operation	Cautions
4	Mount the washers ㉑⑦, springs ㉔① and spring seats ㉑⑥ in order onto the spools ㉒①. 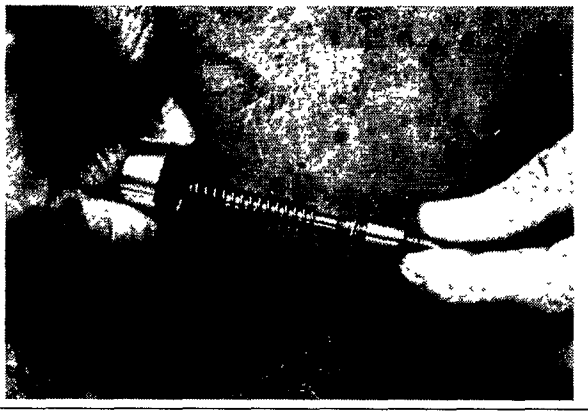	
5	Stand each spool ㉒① on a level work bench, push the spring seat ㉑⑥ up and insert the two semicircular washers 1㉑⑤ into the top of the spring seat, such that they do not overlap. 	Do not pull down the spring seat by more than 6mm.
6	Mount the return springs ㉒① into the casing Mount the pressure reduction assembly into the casing 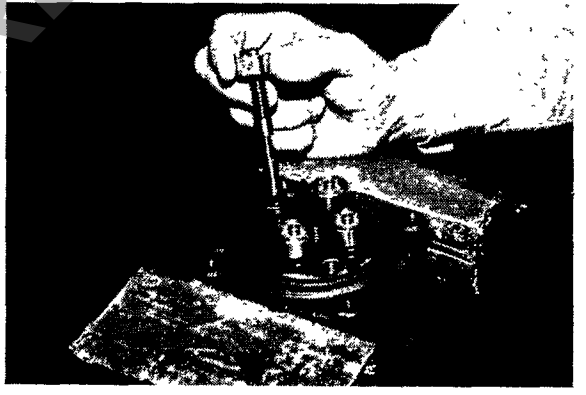	Assemble in the same positions as before disassembly.

PREVIEW - YOUFIXTHIS.COM

Download full manual at youfixthis.com

The machine is hot right after operation.

- Touching the engine or other parts with a bare hand right after engine has stopped is very dangerous You may burn your hands
- Do not remove the cap for radiator or hydraulic tank right after operation until all internal pressure is released.

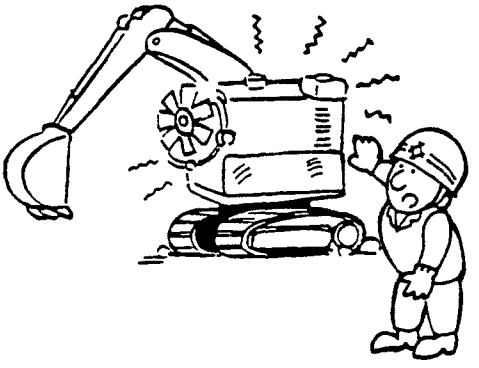

Caution for inspection and adjustment.

- Be careful not to drop bolts, nuts, or tools inside the inspection window or oil supply hole of tank when opening them.



Carrying heavy object

- If the object weighs more than 20 kg (44 lbs), carry with two men or more together or use hoist crane

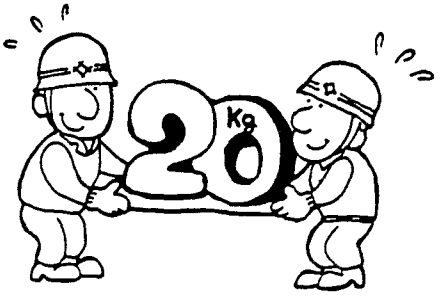

Caution for use of tools

- Provide safety equipment when grinding or during hammering work Wipe of oil or dust from tools before using

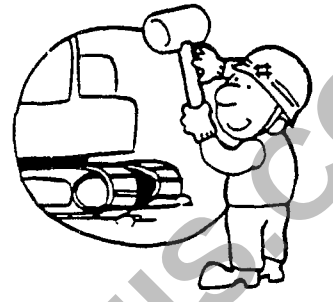

Caution during work on a higher position

- Use scaffolding as much as possible
- Use steps when getting on and off from them

⚠ CAUTION

Do not jum off

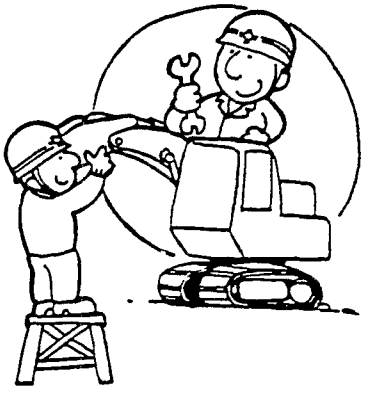

PREVIEW OF YOUFIXTHIS.COM

Download full manual at youfixthis.com

3 Handling of the Interchangeable (Common) Parts

3.1 Packings

1) As a rule, replace packings, gaskets, and copper packings with new ones.
2) Coat the gasket for particular area with liquid packing.
* *Use cautions when applying liquid packing.*
3) Remove flaw, dust, paint, oil, or previously used liquid gasket completely.
4) Evenly coat with specified liquid gasket and let it dry for few minutes.
5) When it is dried to touch, mate the gaskets.
6) Leather packing should be assembled after dipping in oil

3.2 "O"-Ring

1) If "O"-ring has been hardened after long storage, discard even if it is unused
2) Use only "O"-rings specified in detailed parts list For the lubricated area in engine in particular, "O"-rings of special material like silicon rubber are being used for the purpose of heat resistance as well as prevention of deterioration Therefore do not use substitute parts.
3) Periphery of "O"-ring is marked with either blue or green dot for following identifications

ID	Type	Symbol	Hardness	Purpose	Type of rubber
Blue 1 dot	JIS B2401	1A	70±5	Mineral oil resistant for low pressure	NBR
Blue 2 dots	JIS B2401	1B	90±5	Mineral oil resistant for high pressure	NBR
Red 1 dot	JIS B2401	2	70±5	Gasoline resistant	NBR
Yellow 1 dot	JIS B2401	3	70±5	Vegitable oil resistant	CR
No dot	JIS B2401	4C	70±5	Heat and cold resistant	Silicon rubber
Green 1 dot	JIS B2401	4D	70±5	Heat and oil resistant	Flourine rubber

4) Coat "O"-rings with oil before installation to avoid flaws.
Silicon rubber is easily torn

3.3 Oil Seal

1) Pay attention to the direction of oil seal lips

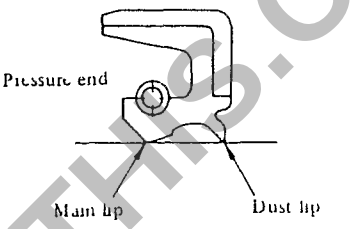

2) Take care that dust does not get on oil seals, and make sure there is no rust or flaw (especially on lip surface).
3) For assembling oil seal, apply grease in the following manner in order to prevent early dry friction
a) Single lip type oil seal
Apply to entire periphery on the opposite side of lip's seal end uniformly with finger to the extent that it does not build up
b) Double lip type oil seal
Apply to entire periphery of lip's space with finger to 40 - 60% of the space

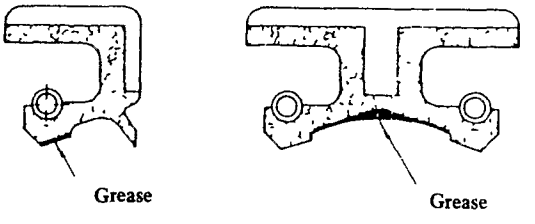

4) Make sure that there is neither dust, flaw, nor rust on the contact surface (shaft area) of the oil seal, and apply grease or lubrication oil for smooth installation.
5) For checking a flaw on lip surface, lightly sweep with wire. If it catches, replace the oil seal.

PREVIEW - YOUFIXTHIS.COM
Download full manual at youfixthis.com

6) Install them with guide and jig as shown below to avoid damaging oil seal lip.

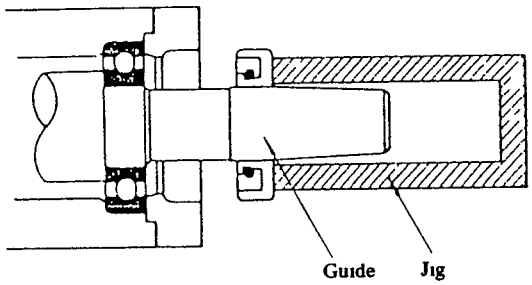

7) After they are pressed in, they should be flush, or below, in their housing.

8) When applying bonding material to the periphery of oil seal, take care not to deposit it on lip surface Especially, bonding material deposited on jig is easy to be transfered to lip. Use clean guide and jig.

3.4 Bearing

1) Due to extremely high accuracy of the bearing, following cares should be taken

a) Since the influence of dust to the bearing wear is so great, dust prevention should be sufficiently taken care of at disassembling and reassembling. Do not unpack the bearing until immediately before installation.

b) Avoid rough handling or giving any shock. Do not allow bearings to spin while cleaning with compressed air.

2) Cautions during bearing installation.

a) Do not hit on either inner or outer ring during bearing installation which causes the indentations on the rolling surfaces.

b) If interference is required on inner ring, press in with jig as shown below.

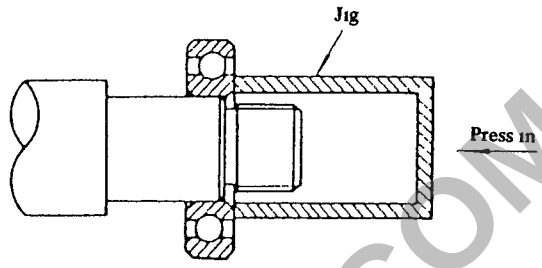

Bearing with great interference should be shrunk fit. Do not raise temperature at this time over 120°C (248°F) to prevent decrease of heat treated hardness.

c) Non-separating bearing which requires interference on both inner and outer ring, should be pressed-in by means of jig as shown.

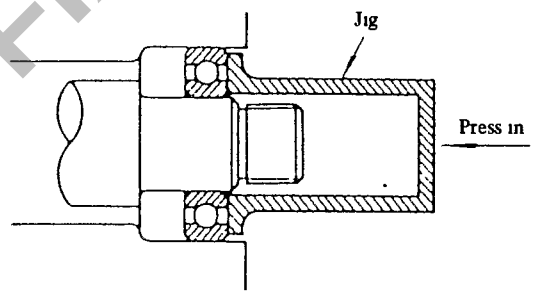

3.5 Snap Ring

1) For installation and removal of the snap ring, use snap ring pliers, being careful not to widen excessively.

2) Make sure that it is completely settled in groove after installation

PREVIEW - YOUFIXTHIS.COM
Download full manual at youfixthis.com

CONTENTS

Caution For Inspection And Maintenance 80-10-76-02
Basic Rules 80-11-76-02
Hydraulic Circuit 80-21-93-34
Electric Circuit 80-22-93-34
Performance Standards 80-31-93-34
Points To Note For Replacement Of Main Hydraulic Devices 80-40-93-34
Oil Stopper For Suction Strainer 80-41-76-33
Traction Motor And Reduction Gear 81-02-46-50
Traction Drive Assembly 81-02-46-72
Take-Up Roller 81-03-43-70
Carrier Roller 81-04-21-70
Track Roller 81-05-21-70
Grease Cylinder, Recoil Spring 81-06-43-70
Recoil Spring And Roller 81-06-24-72
Shoe And Drive Sprocket 81-09-49-70
Swing Motor And Reduction Gear 82-02-23-50
Swing Motor Assembly 82-02-23-70
Engine Mounting 83-01-25-72
Hydraulic Pump 84-01-25-50
Pump Installation 84-01-25-72
Rotating Joint 84-13-43-50
Pilot Valve 85-01-23-50
Control Valve 85-03-24-50
Hydraulic Cylinder 86-01-26-50
Service Monitoring System 91-03-23-50
Weight Of Components 99-60-93-34
Maintenance Standards (Outer Race) 99-82-02-34
Maintenance Standards (Back-Hoe Attachment) 99-86-01-34
Conversion Table 99-99-76-80

PREVIEW - YOUFIXTHIS.COM

Download full manual at youfixthis.com

PREVIEW ONLY

You're viewing 18 of 410 pages

The full manual includes:

- All 410 pages, complete
- Searchable PDF (find any keyword)
- No watermarks
- Instant download
- Print-ready quality

GET FULL MANUAL NOW

Link-Belt LS-2800CII Shop Manual

Scan or click anywhere
youfixthis.com

Click anywhere on this page to get the full manual