SECTION 2
HYDRAULIC SYSTEM

SECTION CONTENTS

Hydraulic System Description 2-1
General Adjustment and Repair Procedures 2-1
Hydraulic System Maintenance Precautions 2-3
Label Parts when Disassembling 2-3
Hydraulic Oil Recommendations 2-3
Draining and Flushing 2-3
Removing Air From the Hydraulic System 2-4
Parts Replacement 2-5
Maintenance Records 2-5
Hydraulic Oil Reservoir 2-5
Hydraulic Filter 2-5
Oil Cooler Service and Maintenance (Optional) . . 2-5
Servicing the Control Valves 2-5
Disassembly and Reassembly of Control Valves to Replace Seals 2-5
Replacing Spool Seals 2-6
Unloader Valve Service 2-6
Control Valve Relief Adjustment 2-7

HYDRAULIC SYSTEM DESCRIPTION

The hydraulic system of this machine is an open center type consisting of a fixed displacement three section high pressure pump which supplies oil to a main control valve and a hoist control valve. The main control valve is equipped with a main inlet and a mid inlet. The main inlet supplies oil to the turn function, the mid inlet supplies the remainder of the crane function requirements. The main control valves contain inlet section reliefs or port reliefs which limit pressure in the hydraulic system to acceptable levels and control crane movements.

The large single section control valve supplies oil to hoist up and down. The inlet section contains a screw adjustable main relief. The first work section of the multi-section main control valve controls turn right and left.This work section is supplied oil by the main inlet section which contains a screw adjustable relief valve. The remaining work sections are boom telescope, boom lift, and outrigger functions in that order. The oil to these sections is supplied by the mid inlet section which also contains a main relief valve. The hoist and the main circuits are all connected through shuttles to a pressure gauge located on the control console.

The hydraulic oil is supplied by a truck frame mounted oil reservoir, which is equipped with a replaceable canister type return oil filter. The truck power take off driven hydraulic pump is sized to supply 34 gpm (129 lpm) to the hoist circuit, 18 gpm (68 lpm) to the boom lift and telescope circuits and 10 gpm (38 lpm) to the turn function at 2500 rpm pump shaft speed. Higher pump speeds may result in excessive heat generation in the hydraulic system. The pump is not bidirectional and can only be used when the shaft rotates only in the proper direction. If you need to verify or change pump rotation, contact your National Crane distributor or Manitowoc Crane Care.

The crane hydraulic system includes a hydraulic capacity alert system. This system is a hydraulically operated, maximum capacity sensing device that monitors lift cylinder pressure. As pressure in the lift cylinder approaches its maximum predetermined level, which can be monitored on the console mounted range gauges, a hydraulic pressure switch activates an integral hydraulic dump circuit in the main control valve, disabling the crane functions that increase the over capacity condition.

All load bearing cylinders on this machine are protected from inadvertent movement or collapse due to hose failure by pilot operated check valves or by pilot operated counterbalance valves if overhung loads must be controlled.

The standard swing gearbox is locked in place by an integrally mounted spring applied brake and a dual counterbalance motor holding valve. The swing brake and counterbalances are piloted open and closed by operating swing left or right and are automatically reapplied by ceasing the swing function. Maximum swing speed can be limited using the swing speed adjustment valve.

GENERAL ADJUSTMENT AND REPAIR PROCEDURES

Before maintenance, adjustments and repairs are started on a crane, the following precautions shall be taken as applicable:

- Place a warning tag in a conspicuous location at the controls stating that the machine requires adjustment or repair before it can be operated.

PREVIEW - YOUFIXTHIS.COM

Download full manual at youfixthis.com

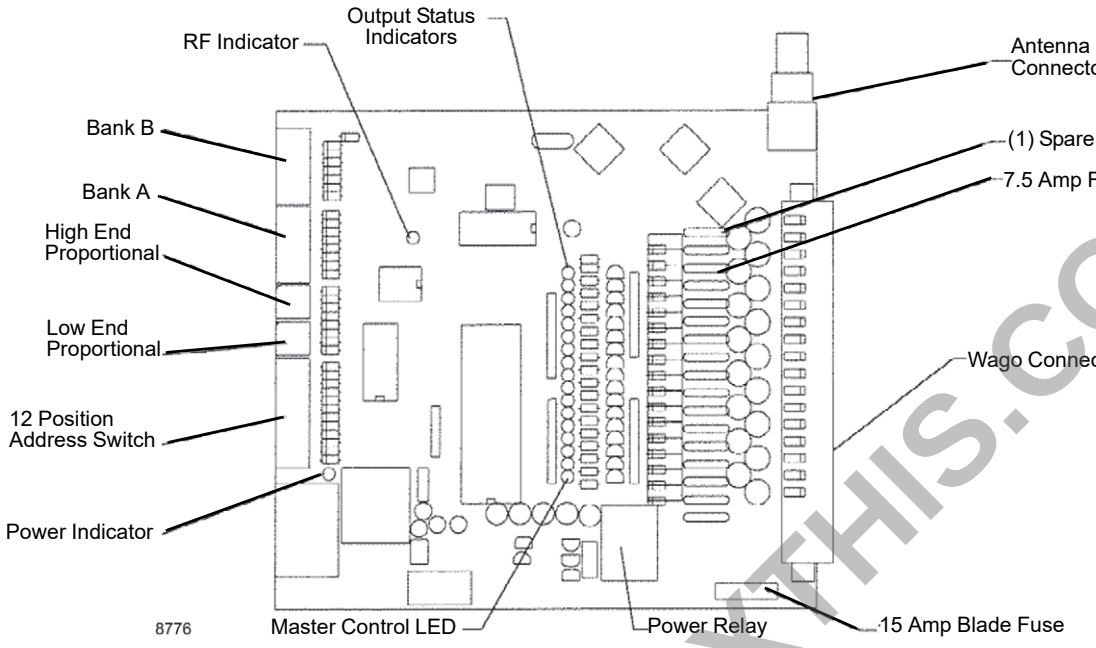

Receiver Printed Circuit Board

FIGURE 3-7

Description	Output Label	NCC Cord Wire Color	5 Conductor Cord Wire Color
N/A	Output 16		
HCA - RCL Override	Output 15	Blu/Red	
Turn RH	Output 14	Org/Blk	
Turn LH	Output 13	Bwn/Blk	
Boom Up	Output 12	Red/Blk	
Boom Down	Output 11	Yel/Blk	
N/A	Output 10		
N/A	Output 9		
Tele Retract	Output 8	Blu	
Tele Extend	Output 7	Org	
Hoist Up	Output 6	Red	
Hoist Down	Output 5	Brn	
N/A	Output 4		
Throttle	Output 3	Red/Blu	Blk
Start	Output 2	Blk/Blu	Org
Ignition	Output 1	Blu/Blk	Yel
Proportional	Master Control	Bwn/Red	
N/A	Option		

PREVIEW - YOUFIXTHIS.COM

Download full manual at youfixthis.com

Table 1-1 Inch Series with Coarse Threads (UNC) – Zinc Flake Coated

Nominal Size, Threads per Inch, and Series Designation	Grade	Torque (ft/lb)		
		Maximum	Nominal	Minimum
1/4-20 UNC	5	6.6	6.4	6.2
	8	9.3	9.0	8.8
5/16-18 UNC	5	13.5	13.2	12.8
	8	19.1	18.6	18.1
3/8-16 UNC	5	24.0	23.4	22.8
	8	33.9	33.1	32.2
7/16-14 UNC	5	38.4	37.4	36.5
	8	54.3	52.9	51.5
1/2-13 UNC	5	58.6	57.1	55.7
	8	82.8	80.7	78.6
9/16-12 UNC	5	84.5	82.4	80.3
	8	119.4	116.5	113.5
5/8-11 UNC	5	116.6	113.7	110.8
	8	164.8	160.7	156.6
3/4-10 UNC	5	206.8	201.7	196.5
	8	292.3	284.9	277.6
7/8-9 UNC	5	333.8	325.4	317.1
	8	471.6	459.8	448.0
1-8 UNC	5	500.3	487.8	475.3
	8	707.0	689.3	671.6
1 1/8-7 UNC	5	624.0	608.4	592.8
	8	1001.4	976.4	951.4
1 1/4-7 UNC	5	880.5	858.5	836.5
	8	1413.1	1377.8	1342.5
1 3/8-6 UNC	5	1154.5	1125.6	1096.7
	8	1852.8	1806.5	1760.2
1 1/2-6 UNC	5	1532.0	1493.7	1455.4
	8	2458.8	2397.3	2335.8

Table 1-2 Inch Series with Fine Threads (UNF) – Zinc Flake Coated

Nominal Size, Threads per Inch, and Series Designation	Grade	Torque (ft/lb)		
		Maximum	Nominal	Minimum
1/4-28 UNF	5	7.5	7.3	7.1
	8	10.6	10.4	10.1

PREVIEW - YOUFIXTHIS.COM

Download full manual at youfixthis.com

pressure induced in the circuit will cause the hoist up or boom extend functions to creep slightly (with no load on the hook). Such a condition is not cause for alarm, as the back pressure is not of sufficient magnitude to damage the cable or end connections.

Anti-two Block Operation

The internal anti-two block wire is routed from the control console to the hoist mount end of the boom, following the path of the extend cables to the rear of the 3rd section boom. This is the length of the wire that proportions in and out with the boom length, similar to the route of the extend cables. At this point at the rear of the 3rd section, the wire loops around and anchors at the anti-two block cable clamp on the extend cable anchor. The anti-two block wire, now attached at the rear of the 3rd section, runs the length of the section and attaches to the 3rd section sheave case. The wire then loops around the clamp arrangement on the sheave case and routes through access holes in the side plate of the boom. The wire terminates at a quick connect three conductor plug designed for anti-two block switch or jib interface.

ANTI-TWO BLOCK INTERNAL WIRE REPAIR

In the event of a break in continuity of the anti-two block wire routed internally in the boom, the anti-two block hydraulic system will sense a problem and make certain crane functions inoperative. Before repair or replacement of internal wire, check for continuity loss at the anti-two block switch, damaged, missing, or corroded connectors and overall system condition. Due to the environmental exposure of the system, a thorough check of the circuit should be performed.

The two methods for removal and reinstallation of the anti-two block wire are: Alternative #1 is used if the wire has experienced a continuity failure in one or both of the conductors, but the rubber jacket of the wire is still intact. Alternative #2 is used if the wire has been completely cut or either end of the wire is inaccessible.

Three Section Boom ATB Wire Repair

WARNING

Do not, under any circumstances, work at an elevated height without using proper fall protection as required by local, state or federal regulations

Alternative #1

This procedure pulls the replacement wire through the boom, following the path of the defective wire.

Special tools or equipment:

- Two end-to-end electrical butt connectors
- Shrink tube or electrical tape

Proceed as Follows:

1. Retract boom completely.
2. Loosen and remove capscrew and cable clamp arrangement from sheave case attachment point of anti-two block wire. Remove quick connect plug on anti-two block wire by unscrewing base of plug and disconnecting individual wires from connections. Note pigtail length at this time and wire/terminal number location for proper reassembly.
3. Pull end of anti-two block wire through side plates of 3rd section boom to gain in-line wire path.
4. Attach replacement anti-two block wire to damaged wire with a temporary splice, securing the conductors with end to end butt connectors and shrink tube or electrical tape. This connection must be secured well enough to pull the new wire through the boom.
5. At the hoist mount end, reach into the rear of the boom and loosen the capscrew on the anti-two block cable clamp enough to let the cable run around it with minimal effort. This clamp is located on the extend cable anchor.
6. Disassemble spade bolt anchor attaching anti-two block wire to the extend cable plate on the hoist mount end of the boom.
7. Pull wire from hoist mount end. Replacement wire temporary splice may need assistance reeving around anti-two block cable clamp in rear of 3rd section. If excessive force is needed to pull wire through, inspect the wire routing and make adjustments as needed to avoid breaking the temporary splice. If splice fails at this point, wire routing Alternative #2 should be used.
8. Pull wire through boom, leaving enough wire on sheave case end to properly attach and terminate wire.
9. Tighten anti-two block wire clamp located in rear of 3rd section.
10. Route sheave case end of anti-two block wire around clamp in sheave case, and through holes in side plates. Pulling on this end will tension the static length of anti-two block wire clamped in the 3rd. Approximately 15-25 lb (6-11 kg) will be sufficient to provide proper operation. Tighten sheave case anti-two block wire clamp.
11. Reassemble quick disconnect plug to anti-two block wire. Proper wire attachment is critical for proper anti-two block system operation.Consult electrical schematic in this book for proper connector wiring.
12. Temporary splice should now be approximately 10 feet (3 m) past the hoist mount end of the boom. Break splices and slide strain relief/cord grip onto wire, into approximate position inside the boom.

PREVIEW - YOUFIXTHIS.COM
Download full manual at youfixthis.com

SECTION 8
TROUBLESHOOTING

SECTION CONTENTS

Hydraulic System Troubleshooting Chart 8-1
Jib Load Limiting Device Troubleshooting 8-4
Jib Jack Troubleshooting 8-5
Systematic Troubleshooting 8-5
HCA Troubleshooting Flow Chart 8-6

HYDRAULIC SYSTEM TROUBLESHOOTING CHART

Condition	Possible Cause	Possible Solution
Oil Leakage	Hose fittings loose, worn or damaged. Oil seal rings deteriorated by excess heat.	Check & replace damaged fittings or “O” Rings. Torque to manufacturers specifications. Replace oil seal rings by disassembling Pump unit.
	Bolt loose or its sealing area deteriorated by corrosion.	(a) Loosen then tighten single bolt to torque specification. (b) Replace bolt.
	Shaft seal worn or damaged.	Remove seal carrier from pump. - Remove damaged seal from seal carrier.
		If shaft is worn, install new seal in the inner position. Reinstall seal carrier.
No Flow from Pump (If pump does not prime in 30 seconds STOP!)	Pump not installed correctly.	Check proper drive rotation. Make sure pump shaft is turning (i.e. drive coupling is engaged). Check for sources of suction leaks, inlet flange tight? Pinched O-rings?
	Pump not getting oil.	Make sure reservoir is full of oil.
	Internal leakage in cylinders, valves, motors or pumps.	Repair component.
No response to control	Overload system inoperative.	Insure overload system is working properly and anti-two block/Overload solenoid is powered.
	Load too heavy.	Check Capacity Chart.
	PTO not engaged.	Engage PTO.
	Low hydraulic fluid supply.	Check and fill as required.
	Suction line blocked.	Drain tank and hose and remove blockage.
	Broken hydraulic pressure line.	Replace as required.
	Defective hydraulic pump.	See Pump Service Manual.
	Incorrect relief valve setting.	Adjust relief.
	Relief valve sticking.	Clean relief.

PREVIEW - YOUFIXTHIS.COM

Download full manual at youfixthis.com

The stability test load will be 1.18 times the load chosen from the load rating area of the capacity chart.

Example: 690E2

- Boom Length: 78' (23.77 m)
- Loaded Radius: 60' (18.29 m)
- Load Rating: 2250 lb (1021 kg)
- Stability Test Load: 1.18 x 2250 lb (1021 kg) = 2655 lb (1204 kg) (Includes weights of slings and downhaul blocks.)

Be sure the stability test weight is accurate. A 1% increase in stability test weight will mean up to a 10% increase in counterweight. Extend the boom to the maximum boom length and hoist the stability load off the ground. Slowly boom the load down so the load will swing out, until the loaded radius is reached. As the boom is lowered keep hoisting the load up to keep it about 6 inches off the ground.

Do not exceed loaded radius

Slowly rotate the boom throughout the work area. As the boom is rotated, the boom will have to be raised and/or lowered to maintain the loaded radius because of subbase flexure.

On units not equipped with single front outriggers (SFO), tipping from stabilizer support to front wheel support will occur as the load or boom is swung around the front. Do not attempt to lift rated loads around the front of the truck unless the unit is equipped with a SFO.

Note: This does not apply to cranes with a rear mount configuration.

NOTE: Weights of accessories installed on the boom or loadline (including downhaul weight) must be deducted from the calculated load when checking stability.

1. If slight tipping occurs, but load can be kept from coming in contact with ground by hoisting the load up, unit is stable. If not, counterweighting will have to be added to get unit in a stable condition or decal must be added to define areas of full stability and areas of reduced capacity because of stability. If the unit is equipped with a jib, the stability test should be repeated. Use the fully extended jib capacity multiplied times 1.18 at the lowest angle that the jib is rated fully extended.
2. When adding counterweight to the vehicle, it is usually most effective when added as close to the crane as possible. After adding counterweight, the above procedure must be repeated to insure the added counterweight is adequate.

SPECIFICATIONS

Hydraulic Pump

Pump Speed ..... 2500 RPM

Displacements:

- Section P1 ..... 18 GPM (68.1 LPM) at 3900 psi +100/-000 (26.89 MPa)
- Section P2 ..... 34 GPM (128.7 LPM) at 3300 psi +100/-000 (22.75 MPa)
- Section P3 ..... 10 GPM (37.8 LPM) at 2350 psi +100/-000 (16.20 MPa)

Hydraulic System

Requirements:

- Boom and Outrigger System ..... 18 GPM (68 LPM), 3900 psi +100/-000 (26.89 MPa)
- Boom Extend ..... 18 GPM (68 LPM), 2800 psi +50/50 (19.31 MPa)
- Boom Retract ..... 18 GPM (68 LPM), 2900 psi +100/-000 (20.00 MPa)
- Hoist System ..... 34 GPM (129 LPM), 3300 psi +100/-000 (22.75 MPa)
- Turn ..... 10 GPM (37.8 LPM), 2350 psi +100/-000 (16.20 MPa)

Reservoir

- Capacity ..... 66 Gallons (250 L)
- Filtration ..... 10 Micron Return
- Flow rates listed are at free flow condition (approx. 100 psi/ 1 MPa)

HCA

Load charts are based on 2650 psi (18.27 MPa) Constant Pressure (2800 psi (19.31 MPa) Trip Pressure on HCA)

- Hoist System Wire Rope ..... Standard 325 ft (99 m) of 9/16” (14.3 mm) diameter,

PREVIEW - YOUFIXTHIS.COM
Download full manual at youfixthis.com

LUBRICATION CHART

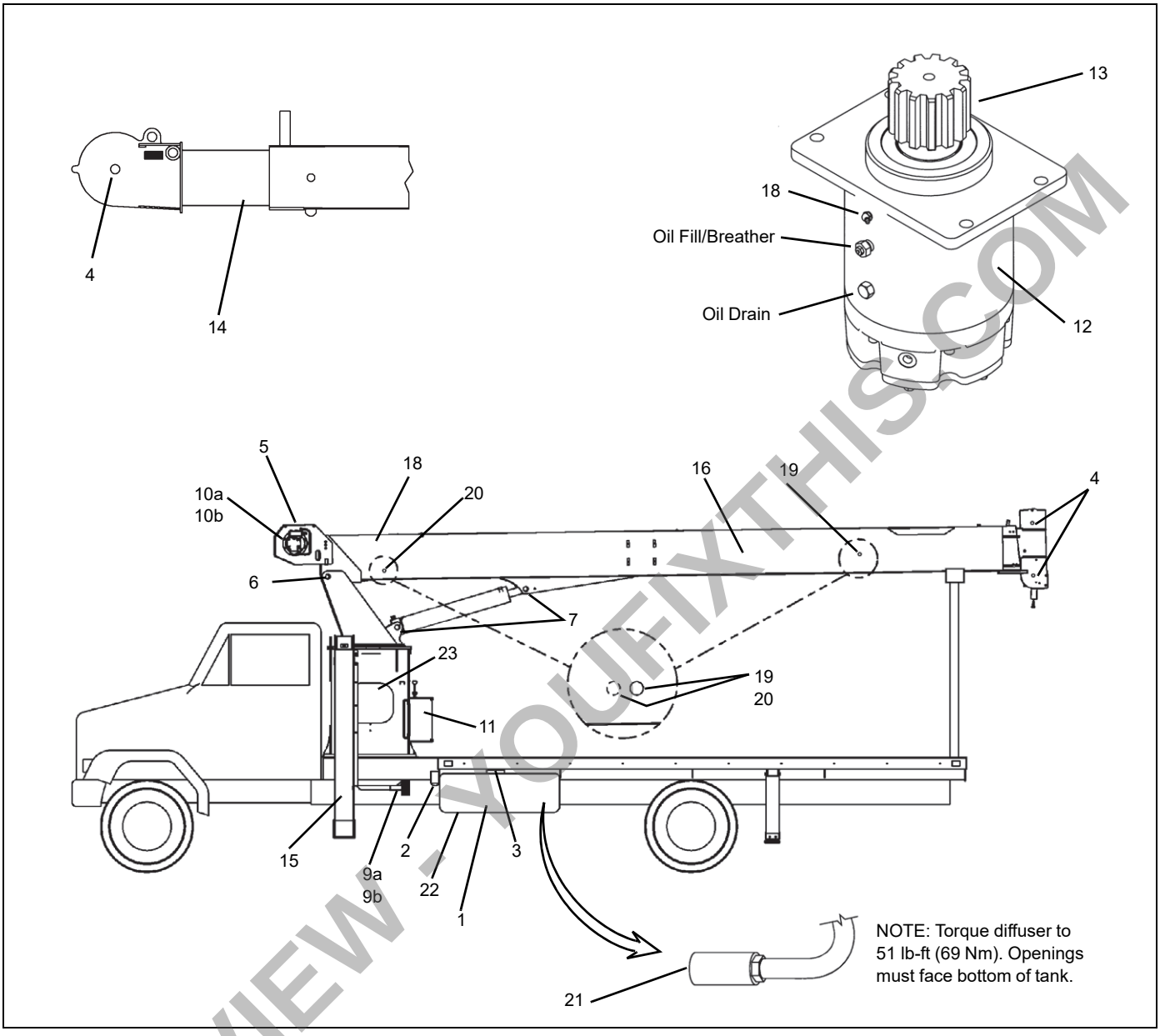

Item	Application	Recommended Lubricant	Procedure	Frequency
1	Hydraulic oil reservoir	HYDO	Check fill change	Weekly, semi-annually, as required
2	Oil filter, magnetic plug, hydraulic oil reservoir		Change or clean	After first 40 hrs. as indicated by gauge thereafter.
3	Breather, hydraulic oil reservoir		Clean	Monthly
4	Sheave pins: boom (3 plcs), jib (1 pl)	EP-MPG	Grease gun	Weekly
5	Wire rope (loadline)	EP-OGL	Brush or spray	Semi-Annually
6	Boom pivot pin	EP-MPG	Grease gun	Monthly
7	Lift cylinder pins - 2 ea.	EP-MPG	Grease gun	Monthly
8	Swing bearing (turret) (Not Shown)	EP-MPG	Grease gun	Weekly
9a	Pump drive U-Joint 2 ea.	EP-MPG	Grease gun	Monthly
9b	Pump spline shaft (direct mount)	EP-MPG	Remove pump and apply to shaft or grease gun	Semi-Annually

PREVIEW - YOUFIXTHIS.COM

Download full manual at youfixthis.com

Unloader Valve Service

See “Anti-two Block System Description” on page 3-1 if an electrical problem has occurred.

This crane has three work sections equipped with unloader (dump) valves. The functions connected to the unloader valves are hoist up, boom down and boom extend. The purpose of these unloaders is to stop control oil from reaching the functions in the event of a two-block occurrence or overload condition. Hydraulic lines extend between the unloader valve on each of these sections to a single solenoid (dump) valve. The hydraulic oil in these lines can drain out over a period of time, when the pump is not engaged, or may be lost during servicing the unit. Air may enter these lines at such a time. If the unloader hydraulic lines have air in them, these three functions may not operate or may exhibit a delay in their operation.

NOTE: Internal parts of the unloader valves are not serviceable.

In the event that one of these three functions do not operate or operates with a delay and the crane is not overloaded or two-blocked, the following air purging procedure should be followed. If no improvement is seen after completing the following procedure twice, follow the troubleshooting steps outlined for checking and inspecting the solenoid valve and unloaders in this hydraulic circuit outlined below.

1. Purposely trip the ATB switch to open the solenoid (dump) valve.
2. Operate hoist up, boom down and boom extend separately for about a minute, longer if the oil is cold.
3. Operate all three functions simultaneously.
4. Release the ATB switch.
5. Check the operation of each function.
6. Repeat procedure if necessary.

In the event that one of these three functions will not operate and the crane is not overloaded or two- blocked, the following procedure is used to diagnose the problem.

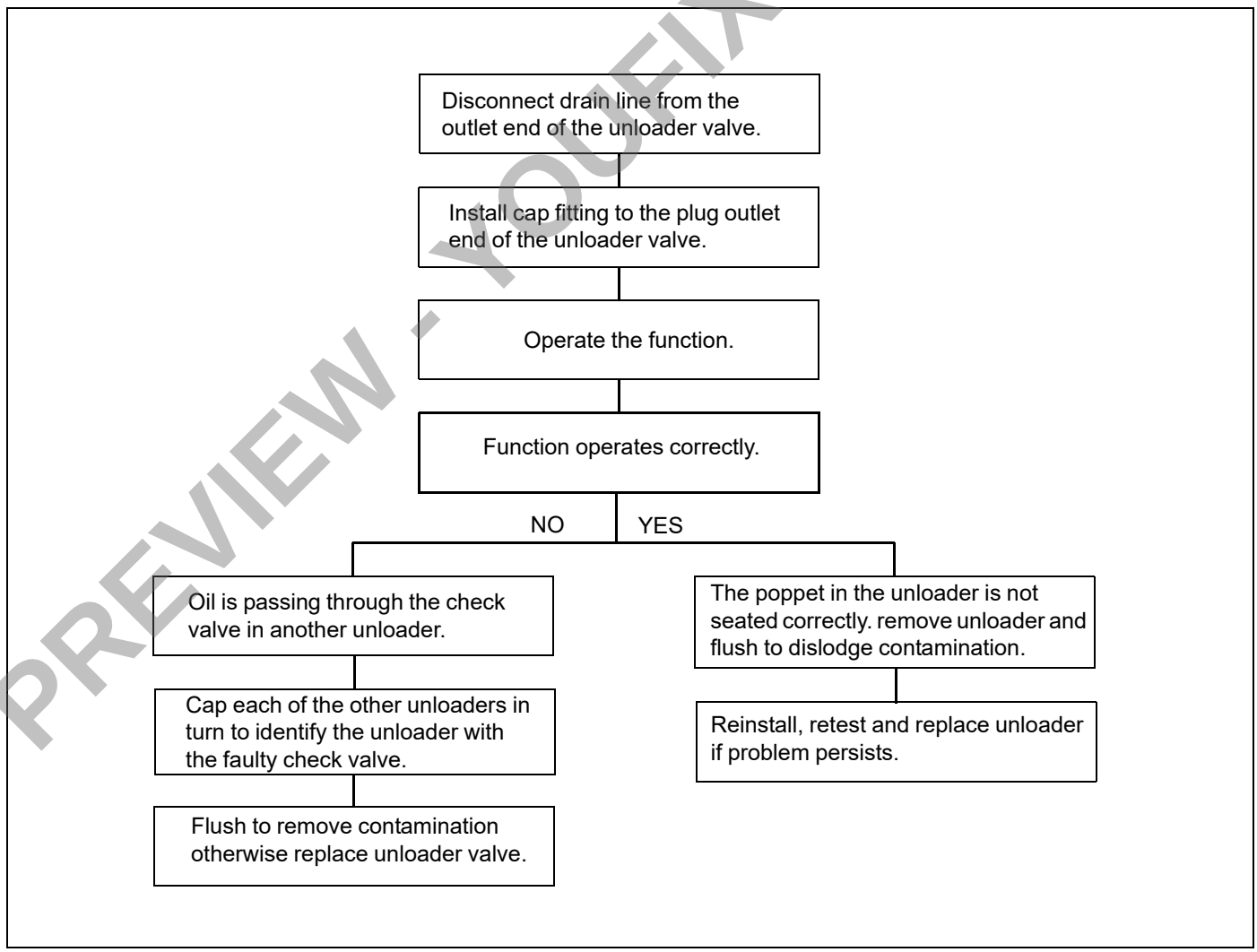

PREVIEW - YOUFIXTHIS.COM

Download full manual at youfixthis.com

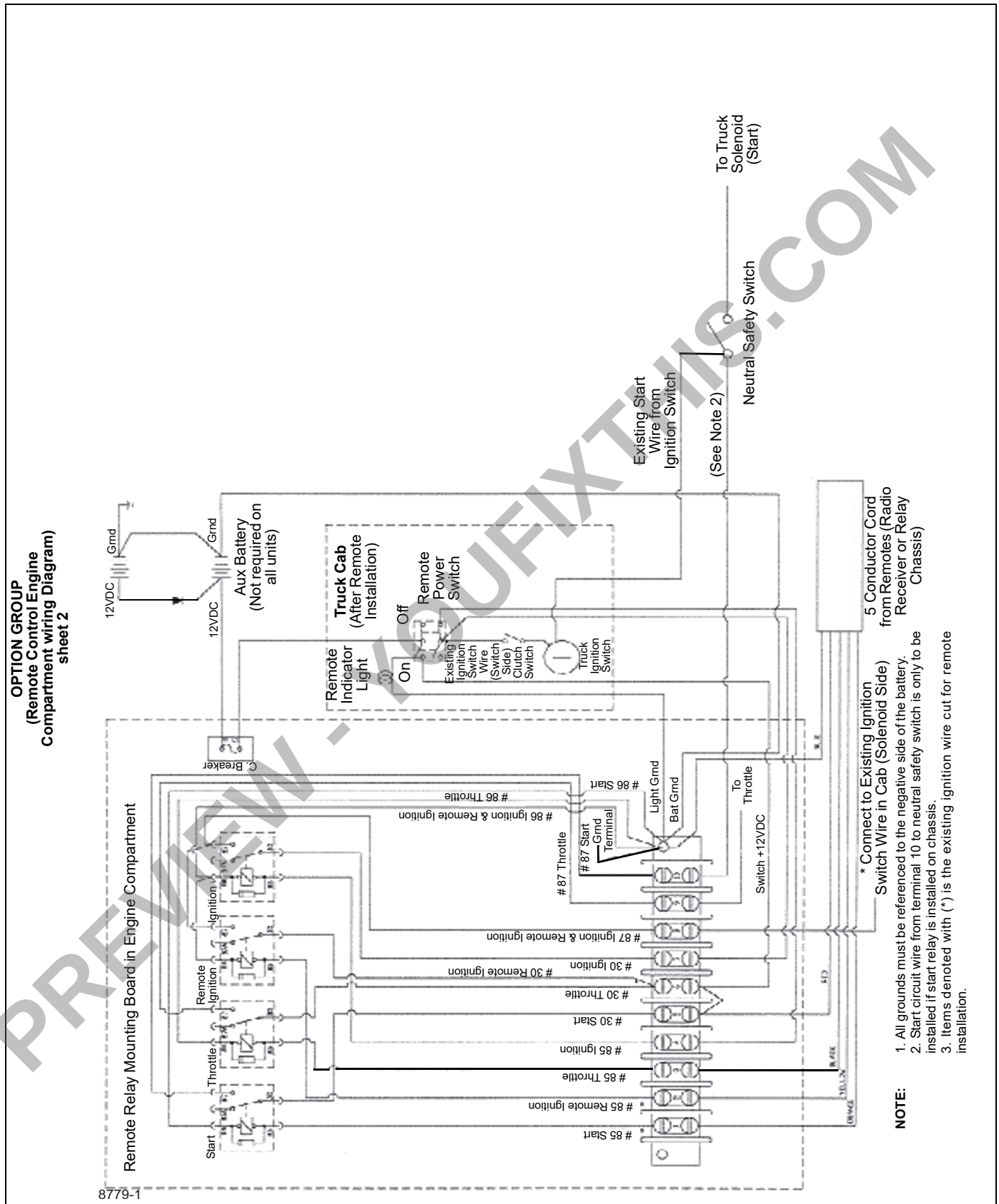

FIGURE 3-10 continued

PREVIEW - YOUFIXTHIS.COM

Download full manual at youfixthis.com

Table 1-2 Inch Series with Fine Threads (UNF) – Zinc Flake Coated (Continued)

Nominal Size, Threads per Inch, and Series Designation	Grade	Torque (ft/lb)		
		Maximum	Nominal	Minimum
5/16-24 UNF	5	15.0	14.6	14.2
	8	21.1	20.6	20.1
3/8-24 UNF	5	27.2	26.5	25.8
	8	38.4	37.5	36.5
7/16-20 UNF	5	42.9	41.8	40.7
	8	60.6	59.1	57.6
1/2-20 UNF	5	66.0	64.4	62.7
	8	93.3	90.9	88.6
9/16-18 UNF	5	94.3	91.9	89.6
	8	133.2	129.9	126.6
5/8-18 UNF	5	132.1	128.8	125.5
	8	186.7	182.0	177.3
3/4-16 UNF	5	231.0	225.2	219.4
	8	326.4	318.2	310.1
7/8-14 UNF	5	367.7	358.5	349.3
	8	519.6	506.6	493.6
1-12 UNF	5	547.4	533.7	520.0
	8	773.5	754.2	734.8
1 1/8-12 UNF	5	700.0	682.5	665.0
	8	1123.5	1095.4	1067.3
1 1/4-12 UNF	5	975.0	950.6	926.2
	8	1564.8	1525.7	1486.5
1 3/8-12 UNF	5	1314.4	1281.5	1248.6
	8	2109.5	2056.7	2004.0
1 1/2-12 UNF	5	1723.9	1680.8	1637.7
	8	2766.8	2697.6	2628.4

Table 1-3 Metric Series with Coarse Threads – Zinc Flake Coated

Nominal Size, Threads per millimeter, and Series Designation	Property Class	Torque (Nm)		
		Maximum	Nominal	Minimum
M4x0.7	10.9	3.6	3.5	3.4
	12.9	4.2	4.1	4.0
M5x0.8	10.9	7.2	7.0	6.8
	12.9	8.4	8.2	8.0

PREVIEW - YOUFIXTHIS.COM

Download full manual at youfixthis.com

13. Assemble spring and spade bolt to cord grip and reassemble anchor components to extend cable anchor plate on the hoist mount. Slide cord grip up anti-two block wire into boom to increase spring tension on moving length of anti-two block wire. Approximately 2 inches (50 mm) of spring extension tension should be adequate for proper operation.
14. Visually inspect interior routing of anti-two block wire for excess slack in wire, inaccurate routing of wire, etc. correct any problems before boom operation.

Alternative #2

This procedure is to be used for anti-two block wire replacement in the event of a complete separation of the wire, or the inability to access one or both of the ends outside the boom assembly. This procedure routes a new anti-two block wire through the boom without having an existing wire to pull it through (Alternative #1).

Special tools or equipment:

- Electrical tape
- Installation tool

To route the wire the entire length of the boom, a long tube, to be used as a installation tool, must be utilized to transport the end of the anti-two block wire from one end of the boom assembly to the other. A telescopic grease applicator for the boom, hydraulic tubing or electrical conduit are all possibilities for an installation tool. The installation tool should be at a minimum 2 ft (61cm) longer than the retracted boom assembly.

1. Retract boom completely.
2. Loosen and remove anti-two block cable clamp arrangements from sheave case and 3rd section extend anchor. Remove spade bolt anchor from extend cable anchor plate in the hoist mount end of boom.
3. Remove quick disconnect plug on anti-two block wire by unscrewing base of plug and disconnecting individual wires from connections. Note pigtail length at this time, and wire/terminal number location for proper reassembly.
4. Pull anti-two block wire out of boom assembly. Visually inspect boom interior from both ends to verify all the cable has been removed from the boom. Visually inspect center sheave on extend cylinder for damage.
5. Start installation of replacement wire on the sheave case end of the boom assembly. Using electrical tape, attach one end of replacement wire to the end of the installation tool.
6. Insert installation tool and wire into sheave case in the center open area between the sheave case side plates. Visually guide the wire and installation tool over the center sheave on the extend cylinder sheave case.
7. Push installation tool and wire through boom until it appears at the hoist mount end, detach wire from installation tool, route wire through open top of hoist mount and temporarily tie off to a convenient anchor point. Pull installation tool out sheave case end of boom.
8. From sheave case end of boom, attach other end of replacement wire to installation tool with electrical tape. Insert installation tool and wire into the boom sheave case, in the open area between the sheave case side plates. Visually guide this end under the center sheave on the extend cylinder sheave case.
9. Push installation tool and wire through boom until it appears at the hoist mount end. Do not detach wire from installation tool.
10. From hoist mount end of boom, locate installation tool and attached wire, and pull the wire out of the boom section, removing the slack loop from the sheave case end of the boom. This will place the wire close to, if not on the center sheave of the extend cylinder.
11. Move to the sheave case end of the boom. Visually determine if the wire has properly located itself onto the sheave. If not, manipulate the wire placement through the end of the boom and place the wire on the sheave. A 5 ft (1.50 m) long access tool (hook end) will simplify this procedure greatly.
12. From the hoist mount end of the boom, assemble the anti-two block wire clamp on the extend cable anchor in the rear of the 3rd section. Loop anti-two block wire around clamp and lightly tighten capscrew holding clamp together. Keeping a slight amount of tension on the wire at this point will keep the wire properly located on the sheave.
13. From the sheave case end, pull the installation tool and wire end out of the boom. The route of the anti-two block wire in the boom is now complete.
14. Pull wire at either end of boom to adjust length of wire on sheave case end to properly attach and terminate wire.
15. Tighten anti-two block wire clamp located in rear of 3rd section.
16. Route sheave case end of anti-two block wire around clamp in sheave case and through holes in side plates. Pulling on this end will tension the static length of anti-two block wire clamped in the 3rd. About 15-25 lb (7-11 kg) is sufficient to provide proper operation. Tighten sheave case anti-two block wire clamp.
17. Reassemble quick disconnect plug to anti-two block wire. Proper wire attachment is critical for proper anti-

PREVIEW - YOUFIXTHIS.COM

Download full manual at youfixthis.com

HCA TROUBLESHOOTING FLOW CHART

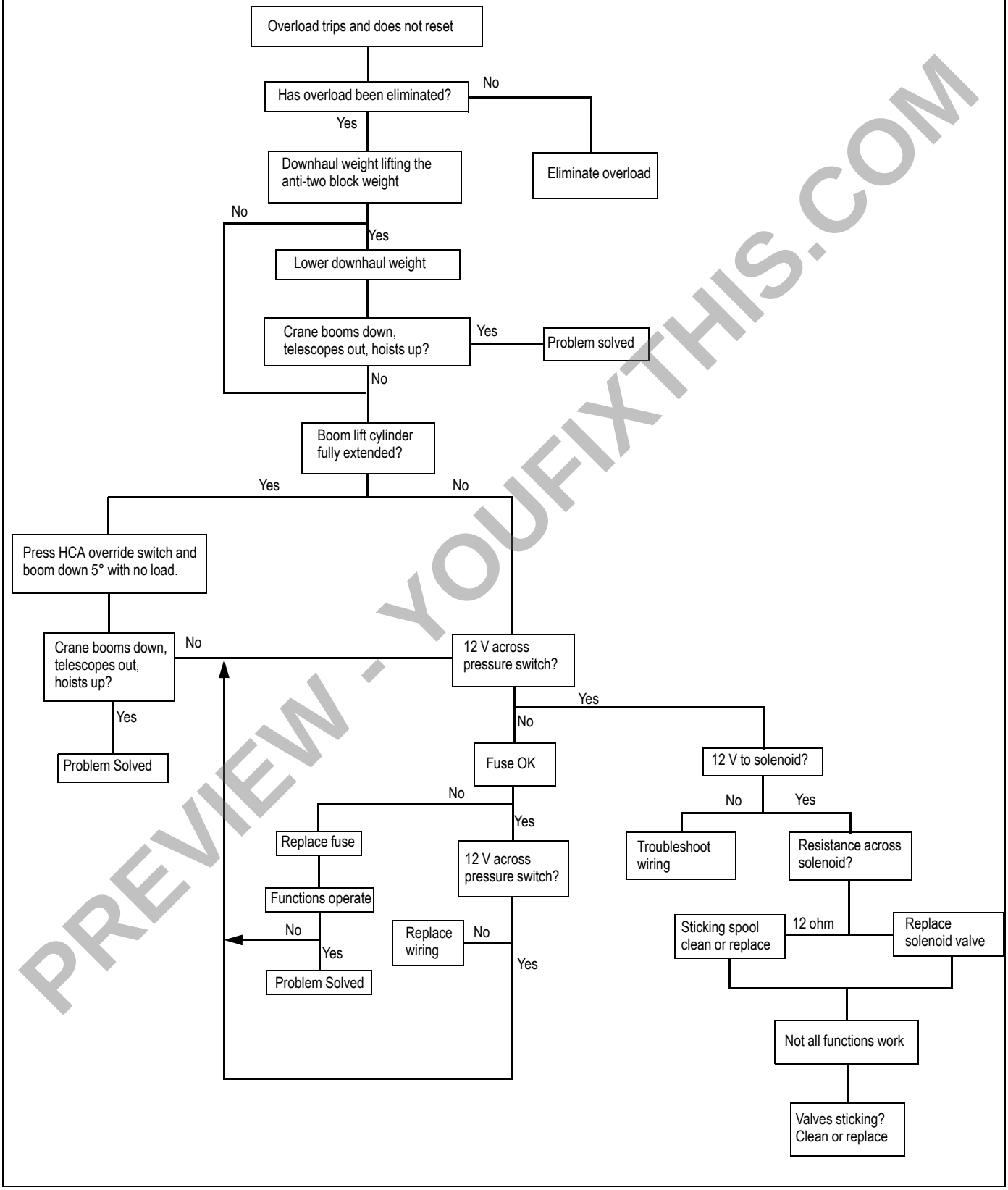

PREVIEW - YOUFIXTHIS.COM

Download full manual at youfixthis.com

PREVIEW ONLY

You're viewing 12 of 184 pages

The full manual includes:

- All 184 pages, complete
- Searchable PDF (find any keyword)
- No watermarks
- Instant download
- Print-ready quality

GET FULL MANUAL NOW

National Crane 600E-2, 647E2, 638E2 Service Manual

Scan or click anywhere
youfixthis.com

Click anywhere on this page to get the full manual