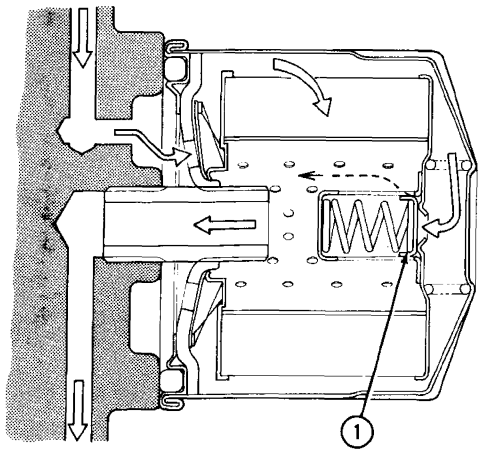

Figure 3
Full Flow Oil Filter Assembly
1. Relief Valve

B. ENGINE OVERHAUL

CYLINDER HEAD AND RELATED COMPONENTS

REMOVAL

1. Drain the radiator, Figure 4.

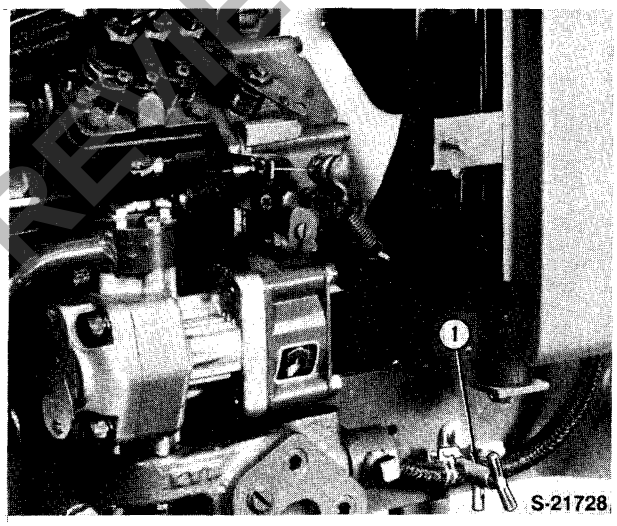

Figure 4
Radiator Coolant Drain
1. Drain Cock

2. Remove the air cleaner assembly, Figure 5.
3. Remove the upper radiator hose.
4. Remove the exhaust muffler and manifold assembly, Figure 5.
5. Remove the upper radiator brace (4) from the top of the cylinder head, Figure 5.
6. Remove the injector lines and cap all openings.
7. Remove the glow plugs (6), Figure 6.
8. Remove the injector assemblies (3), Figure 6.

NOTE: *Be sure to remove the injector sealing washer from the injector bore, if not removed with the injector.*

9. Remove the temperature sender switch, Figure 7.
10. Remove the water pump and thermostat assembly, Figure 8.
11. Remove the external oil transfer tube (2), Figure 2.
12. Remove the valve cover and gasket.
13. Remove the valve rocker arm and shaft as an assembly, Figure 9.
14. Remove the push rods (5), Figure 9.

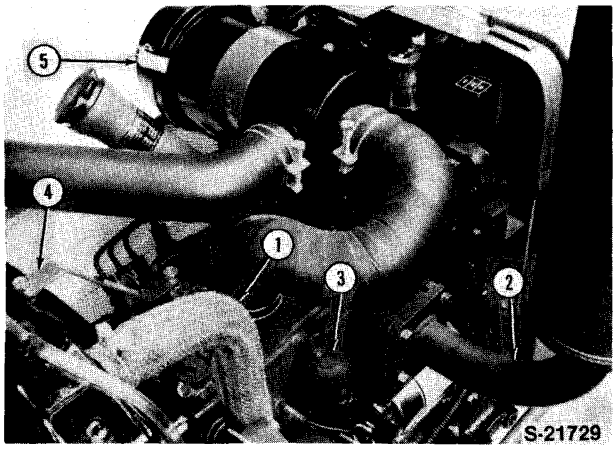

Figure 5
Cylinder Head Removal
1. Upper Radiator Hose
2. Exhaust Muffler
3. Exhaust Manifold
4. Radiator Brace
5. Air Cleaner

PREVIEW - YOUFIXTHIS.COM
Download full manual at youfixthis.com

B. SPECIFICATIONS (Cont'd)

PREVIEW - YOUFIXTHIS.COM

Blurred on purpose. The manual you buy has this page in full quality.

Download full manual at youfixthis.com



PREVIEW - YOUFIXTHIS.COM

Blurred on purpose. The manual you buy has this page in full quality.

Download full manual at youfixthis.com

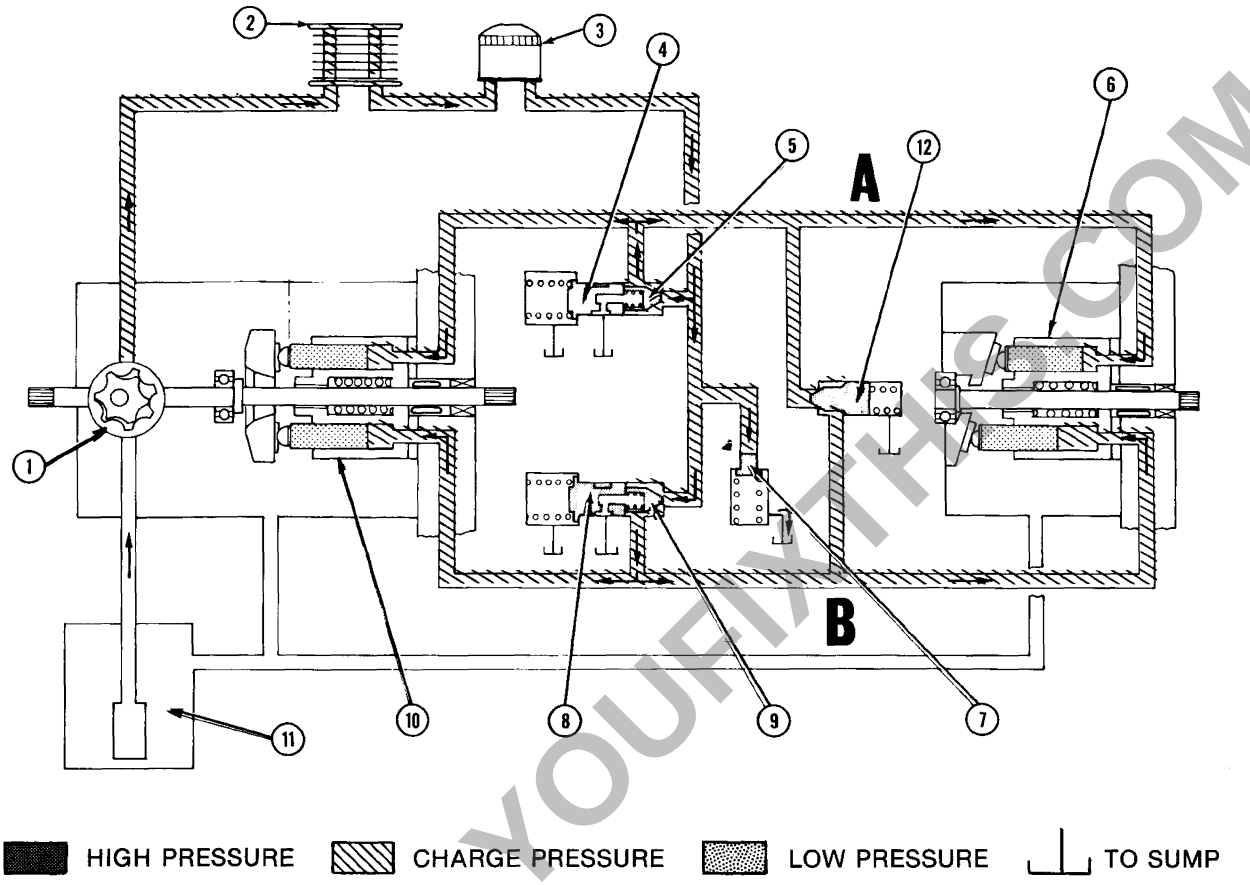

Figure 37
Oil Flow — Neutral Position

1. Charge Pump
2. Cooler
3. Filter
4. Neutral Valve
5. Feed Valve "A"
6. Hydrostatic Motor
7. Charge Pump Relief Valve
8. Neutral Valve
9. Feed Valve "B"
10. Hydrostatic Pump
11. Reservoir
12. High Pressure Relief Valve

Because of equal pressures in passages "A" and "B" the motor does not rotate.

The neutral valves are in a normally open position allowing oil flow past the feed valves to return to sump. The neutral valves set at 470 psi remain open until this pressure is exceeded.

OIL FLOW — FORWARD POSITION
Reference — Figure 38

When the foot pedal is shifted slightly forward, the pump swash plate is tilted at a slight angle and a small quantity of oil is discharged from the piston pump into passage "A." This small quantitiy of oil passes through the neutral valves and returns to sump while causing a slight pressure increase in the "A" circuit.

When the foot pedal is depressed further forward, increased oil flows from the piston pump, through passage "A." Pump pressure on the back side of feed valve 5, Figure 38, closes the feed valve and pressure increases on the neutral valve. At a pressure above 470 psi, the neutral valve closes the return to sump and all oil flow from pump passages "A" flows to the motor, and causes the motor to rotate.

Oil discharged from the motor in passage "B" flows back to the pump to complete the cycle.

PREVIEW - YOUFIXTHIS.COM

Download full manual at youfixthis.com

PART 1
ENGINE SYSTEMS

Chapter 3
TROUBLE SHOOTING, SPECIFICATIONS AND SPECIAL TOOLS

Section		Page
A.	TROUBLE SHOOTING	41
B.	SPECIFICATIONS	46
C.	SPECIAL TOOLS	54

A. TROUBLE SHOOTING

CONDITION	POSSIBLE CAUSE
Engine Does Not Develop Full Power	1. Clogged air cleaner. 2. Fuel line obstructed. 3. Improper injection timing. 4. Improper nozzle injection pressure and angle. 5. Low cylinder compression. 6. Insufficient fuel injection. 7. Improper valve lash adjustment. 8. Burned, worn or sticking valves. 9. Blown head gasket. 10. Worn or sticking piston ring. 11. Faulty engine stop solenoid.
Engine Will Not Stop	1. Faulty engine stop solenoid. 2. Faulty key start switch.
Low Cylinder Compression	1. Burned, worn or sticking valves. 2. Bent valve stem. 3. Broken or weak valve spring. 4. Blown cylinder head gasket. 5. Worn or sticking piston ring. 6. Blown piston.

PREVIEW - YOUFIXTHIS.COM

Download full manual at youfixthis.com

A. TROUBLE SHOOTING (Cont'd)



Blurred on purpose. The manual you buy has this page in full quality.



PREVIEW - YOUFIXTHIS.COM

Download full manual at youfixthis.com

PART 1
ENGINE SYSTEMS

Chapter 1
ENGINE AND LUBRICATION SYSTEM

Section		Page
A.	DESCRIPTION AND OPERATION	1
B.	ENGINE — OVERHAUL	3
	• CYLINDER HEAD AND RELATED COMPONENTS	3
	• ENGINE FRONT COVER, TIMING GEARS AND OIL PUMP	11
	• CONNECTING RODS, BEARINGS, PISTONS, RINGS AND CYLINDER BLOCK	20
	• MAIN BEARINGS, CRANKSHAFT, CAMSHAFT AND FLYWHEEL	26

Chapter 2
COOLING SYSTEMS

Section		Page
A.	DESCRIPTION AND OPERATION	33
B.	COOLING SYSTEM — OVERHAUL	34

Chapter 3
TROUBLE SHOOTING, SPECIFICATIONS AND SPECIAL TOOLS

Section		Page
A.	TROUBLE SHOOTING	41
B.	SPECIFICATIONS	46
C.	SPECIAL TOOLS	54

PREVIEW - YOUFIXTHIS.COM

Download full manual at youfixthis.com

SAFETY PRECAUTIONS

Practically all service work involves the need to drive the tractor. The Operator's Manual, supplied with each tractor, contains detailed safety precautions relating to driving, operating and servicing that tractor. These precautions are as applicable to the service technician as they are to the operator, and should be read, understood and practiced by all personnel.

Prior to undertaking any maintenance, repair, overhaul, dismantling or re-assembly operations, whether within a workshop facility or out "in the field," consideration should be given to factors that may have an effect upon safety, not only upon the mechanic carrying out the work, but also upon bystanders.

PERSONAL CONSIDERATIONS

- The wrong clothes or carelessness in dress can cause accidents. Check to see that you are suitably clothed.

  Some jobs require special protective equipment.

- **Eye Protection**
  The smallest eye injury may cause loss of vision. Injury can be avoided by wearing eye protection when engaged in chiselling, grinding, discing, welding, painting, etc.

- **Breathing Protection**
  Fumes, dust and paint spray are unpleasant and harmful. These can be avoided by wearing respiratory protection.

- **Hearing Protection**
  Loud noise may damage your hearing and the greater the exposure the worse the damage. If you feel the noise is excessive, wear ear protection.

- **Hand Protection**
  It is advisable to use a protective cream before work to prevent irritation and skin contamination. After work clean your hands with soap and water. Solvents such as white spirit, paraffin, etc., may harm the skin.

- **Foot Protection**
  Substantial or protective footwear with reinforced toe-caps will protect your feet from falling objects. Additionally, oil-resistant soles will help to avoid slipping.

- **Special Clothing**
  For certain work it may be necessary to wear flame or acid-resistant clothing.

- Avoid injury through incorrect handling of components. Make sure you are capable of lifting the object. If in doubt get help.

EQUIPMENT CONSIDERATIONS

- **Machine Guards**
  Before using any machine, check to ensure that the machine guards are in position and serviceable. These guards not only prevent parts of the body or clothing from coming in contact with the moving parts of the machine, but also ward off objects that might fly off the machine and cause injury.

- **Lifting Appliances**
  Always ensure that lifting equipment, such as chains, slings, lifting brackets, hooks and eyes are thoroughly checked before use. If in doubt, select stronger equipment than is necessary.

  Never stand under a suspended load or a raised implement.

- **Compressed Air**
  The pressure from a compressed air line is often as high as 100 psi (6.9 bar) 7 (kgf/cm^2). It is perfectly safe if used correctly. Any misuse may cause injury.

  Never use compressed air to blow dust, filing, dirt, etc., away from your work area unless the correct type of nozzle is fitted.

  Compressed air is not a cleaning agent, it will only move dust, etc., from one place to another. Look around before using an air hose as bystanders may get grit into their eyes, ears or skin.

PREVIEW - YOUFIXTHIS.COM

Download full manual at youfixthis.com

If the clearance is less than .002 in. (.06 mm) on Model 1120 and .001 in. (.04 mm) on Model 1220, hone or bore the cylinder to obtain the correct clearance.

Model 1120 .....0024-.0035 in. (.06-.09 mm)
Model 1220 ...0017-.0030 in. (.0425-.0765 mm)

If the clearance is greater than .010 in. (0.25 mm) on Model 1120 and 1220, check the cylinder bore and piston for excessive wear. Replace the piston or bore the cylinder block as required.

NOTE: *If the cylinder is to be bored oversize, pistons are available in two sizes larger than the standard. To match a bore diameter to an oversize piston, use the following chart.*

ASSEMBLY

1. Assemble the pistons and connecting rods with the matching marks on the rods on the same side as the trade name "SHIBAURA" embossed on the inside of the piston skirt, Figure 70.

2. Using a suitable ring expander tool, install the piston rings positioning the ring gaps approximately 90° from each other. Do not position a ring gap over the piston pin bore, Figure 71.

INSTALLATION

1. Using a suitable ring compressor, install the piston and rod assemblies in their respective cylinder bores.

   Position the piston and rod assembly in the block with the connecting rod matching marks facing as follows:

   Model 1120 & 1220.....to injection pump side

2. Using plasti-gauge, check the connecting rod bearing clearance on the crankshaft as follows:

   - Position the piece of plasti-gauge of the correct size across the full width of the bearing liner at approximately 1/4 inch off center. Install the rod cap and tighten to the specified torque, Figure 72.

   - Remove the rod cap and measure the width of the flattened plasti-gauge using the plasti-gauge scale.

   - The width of the widest flattened plasti-gauge is the minimum clearance and the width of the narrowest plasti-gauge is the greatest clearance. See specifications for bearing clearance.

3. Reinstall the bearing caps making sure the rod and cap matching marks are aligned, Figure 70.

4. Tighten the connecting rod bolts to the specified torque.

   Model 1120 & 1220...22-25 lbs. ft. (29-34 Nm)

MAIN BEARINGS, CRANKSHAFT, CAMSHAFT AND FLYWHEEL

REMOVAL

Flywheel Removal — Figure 73

1. Separate the engine from the transmission as described in Part 12.

2. Remove the flywheel as follows:

   - Loosen the flywheel attaching bolts.

   - Using a brass drift and hammer, tap the end of the crankshaft to loosen the flywheel from the end of the shaft.

   - Remove the attaching bolts, lock washer and flywheel from the crankshaft.

OVERSIZE PISTON AND BORE DIAMETER

Tractor Model	Piston Oversize	Bore Diameter
1120	.020 in. (0.5 mm) .040 in. (1.0 mm)	2.851-2.852 in. (72.415-72.43 mm) 2.870-2.871 in. (72.915-72.93 mm)
1220	.020 in. (0.5 mm) .040 in. (1.0 mm)	2.970-2.971 in. (75.4425-75.4575 mm) 2.989-2.990 in. (75.9425-75.9575 mm)

PREVIEW - YOUFIXTHIS.COM

Download full manual at youfixthis.com

PART 2
FUEL SYSTEM

Chapter 1
INJECTION PUMP

Section		Page
A.	DESCRIPTION AND OPERATION	1
B.	REMOVAL AND INSTALLATION	4
C.	TIMING	5

NOTE: *Engine Stop Solenoid (2), Figure 1, information is covered in Part 3, Electrical Systems, in this manual.*

A. INJECTION PUMP — DESCRIPTION AND OPERATION

The fuel injection pump is a constant stroke, in-line pump, Figures 1 and 2.

The pump operates at one-half engine speed and contains one pumping element for each cylinder.

The injection pump is not serviced and should be replaced as an assembly if trouble shooting indicates faulty pump operation.

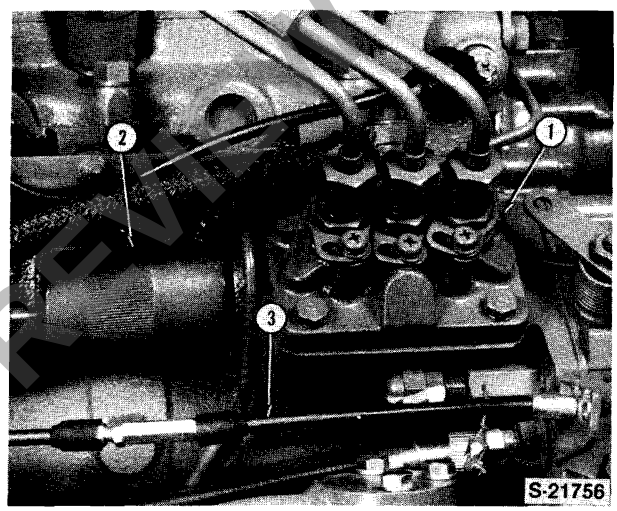

Figure 1
Fuel Injection Pump

1. Pump Assembly
2. Fuel Shut-Off Solenoid (Covered in Part 3 — Electrical Section)
3. Throttle Control Cable

The pump elements accurately meter and deliver the fuel to the injectors, Figure 3.

Each of the pumping elements consist of a barrel and plunger lapped together to give an accurate fit. Two diametrically opposed drillings in the barrel form fuel inlets and the barrel is splined, with a master spline, for correct location within the pump body, Figure 3.

An annular groove is machined around the plunger into which fuel leaking between the barrel and plunger may accumulate. This leakage provides lubrication of the barrel and plunger surfaces.

The plunger has a fuel port which terminates in a helical groove (6), Figure 3, that is machined in the periphery of the plunger (2), Figure 3.

The element operates as follows; Figure 3:

Position A

With the plunger at the bottom of the stroke, fuel flows into the barrel through the two inlet ports to fill the space above the plunger, the center drilling and the helical groove.

Position B

As the plunger rises, the two inlet ports in the barrel are just covered and the fuel is trapped. This point is called "spill cut-off" or "point of injection." Further upward movement of the plunger tends to compress the trapped fuel until the delivery valve, which acts as a non-return and unload valve, is lifted from the seat allowing the fuel to pass along the pipeline to the injector. The pressure developed lifts the injector needle valve off the seat and injection takes place.

PREVIEW - YOUFIXTHIS.COM
Download full manual at youfixthis.com

7. Clean the outside of the battery case if the original battery is to be installed. Flush the top cover with soda solution to remove acid film. Be careful to prevent soda solution from entering the cells. Remove corrosion from the terminals with a wire brush. Inspect the case for cracks or other damage which would result in leakage of electrolyte.

SPECIFIC GRAVITY — HYDROMETER TEST

The hydrometer test indicates the battery state of charge by measuring the specific gravity of the electrolyte in the battery cells. The specific gravity will vary according to the amount of unused sulphuric acid remaining in solution. The quantity of sulphuric acid in solution determines the battery state of charge.

The hydrometer used for this test should be equipped with a thermometer and the float scale should be graduated to read from 1.160 to 1.320 in graduations of .005 specific gravity. The graduated marking should be accurate within .002, Figure 18.

1. Check the electrolyte level in each cell. Add water to any low cells and charge the battery for ten minutes at twenty amperes to mix the water with the electrolyte.

2. Draw electrolyte in and out of the hydrometer barrel to equalize the temperature of the float and thermometer to that of the acid in the cell.

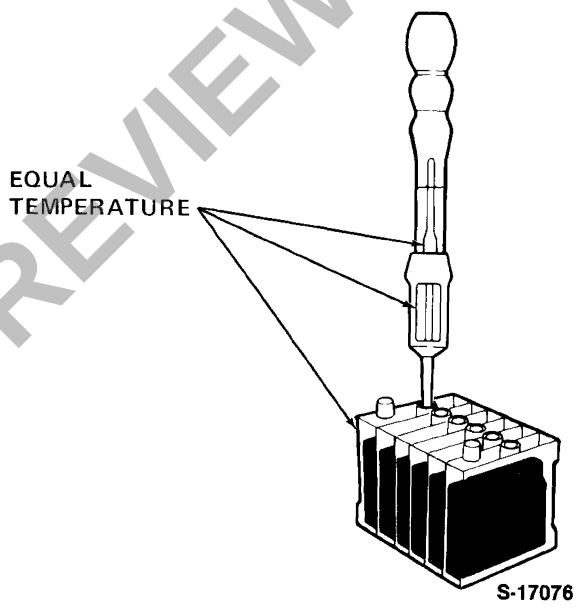

Figure 18
Hydrometer Testing

3. Draw in enough electrolyte to raise the float in the barrel with the bulb fully floating. Do not draw in so much electrolyte that the float is forced against the top of the barrel.

4. With the hydrometer at eye level, read the float scale at the electrolyte level. Hold the hydrometer straight so that the float does not stick to the side of the barrel, Figure 19.

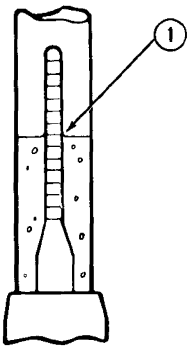

Figure 19
Hydrometer Reading
1. Electrolyte Level

5. Read the specific gravity of each cell.

6. Correct the specific gravity reading for temperature variations, Figure 20.

   a. Add .004 points for each 10° above 80°F.

   b. Subtact .004 points for each 10° below 80°F.

TEST RESULTS

1. If the average specific gravity of all cells is above 1.225, but the variation between cells is more than 50 points (.050), the battery is unserviceable. Remove the battery for further testing.

PREVIEW - YOUFIXTHIS.COM

Download full manual at youfixthis.com

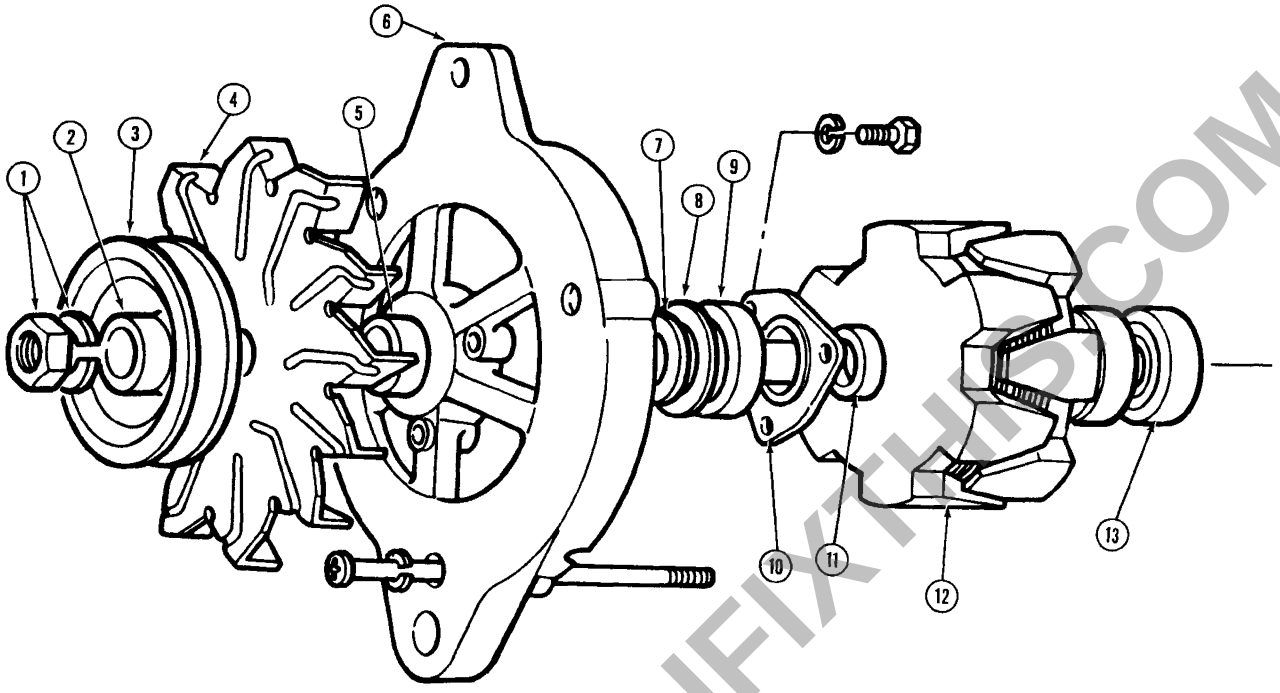

Figure 78
Alternator Disassembly

1. Nut and Lock Washer
2. Collar
3. Pulley
4. Fan
5. Collar
6. Front Housing
7. Dust Seal
8. Seal Cover
9. Bearing — Front
10. Plate
11. Collar
12. Rotor Assembly
13. Bearing — Rear

13. Using a suitable puller, remove the rear bearing from the rotor shaft.

INSPECTION

ROTOR
Reference — Figure 81

Inspect the rotor for the following:

1. Stripped or damaged threads.
2. A damaged or enlarged key slot which could prevent a tight fit in the key slot.
3. Scored bearing surfaces indicating the bearing has spun on the shaft.
4. Scuff marks on the pole fingers indicating bent shaft which allows the rotor to rub the stator frame.
5. Dirty or contaminated slip. If the slip rings are dirty they may be cleaned with No. 400 silicon carbide paper (DO NOT USE EMERY CLOTH) and finish polish with crocus cloth. Spin the rotor in a lathe or drill press while cleaning to prevent flat spots.

ELECTRICAL TESTS
Reference — Figure 82

1. Using a ohmmeter, touch one ohmmeter lead to each of the rotor slip rings and observe the ohmmeter reading.

PREVIEW - YOUFIXTHIS.COM

Download full manual at youfixthis.com

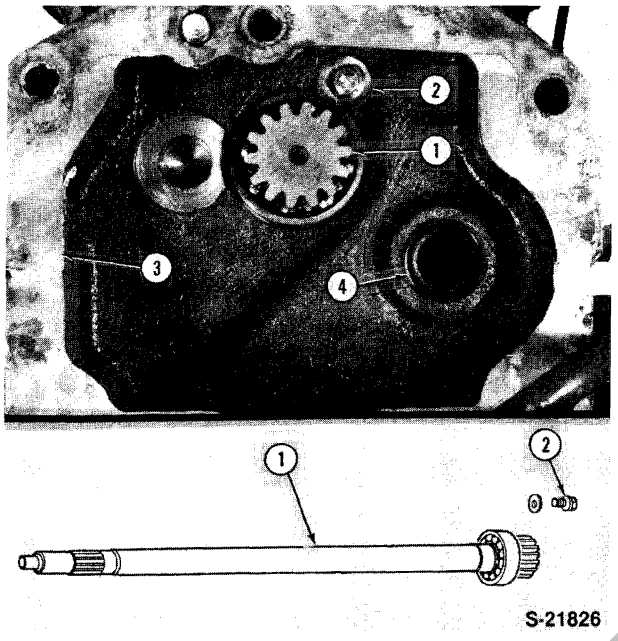

Figure 19
Input Shaft Removal (9 x 3 Gear Transmission)

1. Input Shaft
2. Retaining Bolt
3. Front Transmission Case
4. FWD Shaft Oil Seal

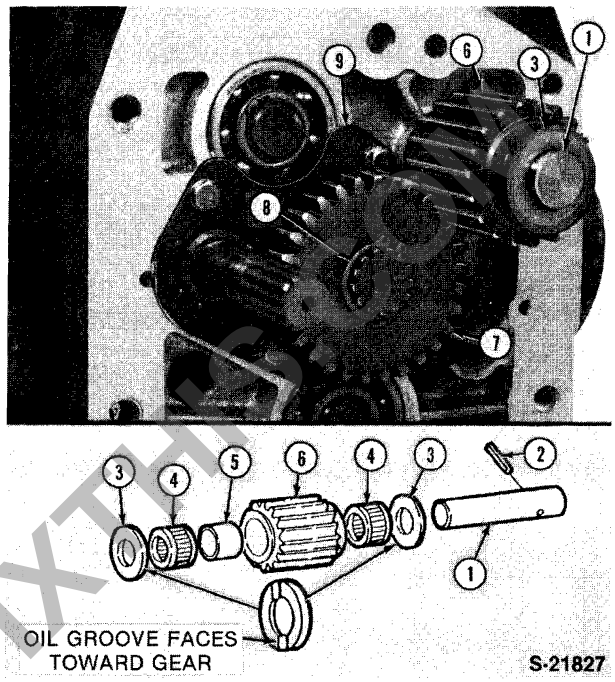

Figure 20
Input Shaft Idler Gear Removal

1. Shaft
2. Roll Pin
3. Thrust Washer
4. Needle Bearing
5. Spacer Collar
6. Idler Gear
7. Countershaft Gear
8. Snap Ring
9. Retainer Plate

2. Remove the idler gear (6) and shaft (1) from the front of the transmission, Figure 20.

3. Remove the snap ring (8) and remove the countershaft gear (7), Figure 20.

MAIN SHAFT REMOVAL

4. Remove the retainer plate (1) from the front of the transmission case, Figure 21.

5. Remove the snap ring (2) from the rear groove of the main shaft, Figure 22.

6. Remove the snap ring (2), Figure 21.

7. Release the snap rings (10 and 11) from the grooves on the main shaft, Figure 22.

8. Gently drive the main shaft forward and remove the bearing (14), Figure 22,from the shaft and housing. Then remove the two fixed gears (5 and 6) and spacer (8), Figure 22.

9. Gently drive the main shaft rearward and remove the snap ring (10), sliding gear (3), snap ring (11), gear cluster (4), snap ring (12) and spacer (7) from the shaft.

10. Remove the main shaft from the front of the transmission while removing the bearing (15) from the rear of the shaft.

FRONT WHEEL DRIVE SHAFT

REMOVAL

11. Remove the hydraulic system filter and tube, Figure 23. See Part 8.

12. Remove the FWD shift lever and linkage, Figure 23.

13. Remove the shifter cover assembly (3), Figure 23.

14. Remove the snap ring (1) and sliding gear (2), Figure 24.

PREVIEW - YOUFIXTHIS.COM

Download full manual at youfixthis.com

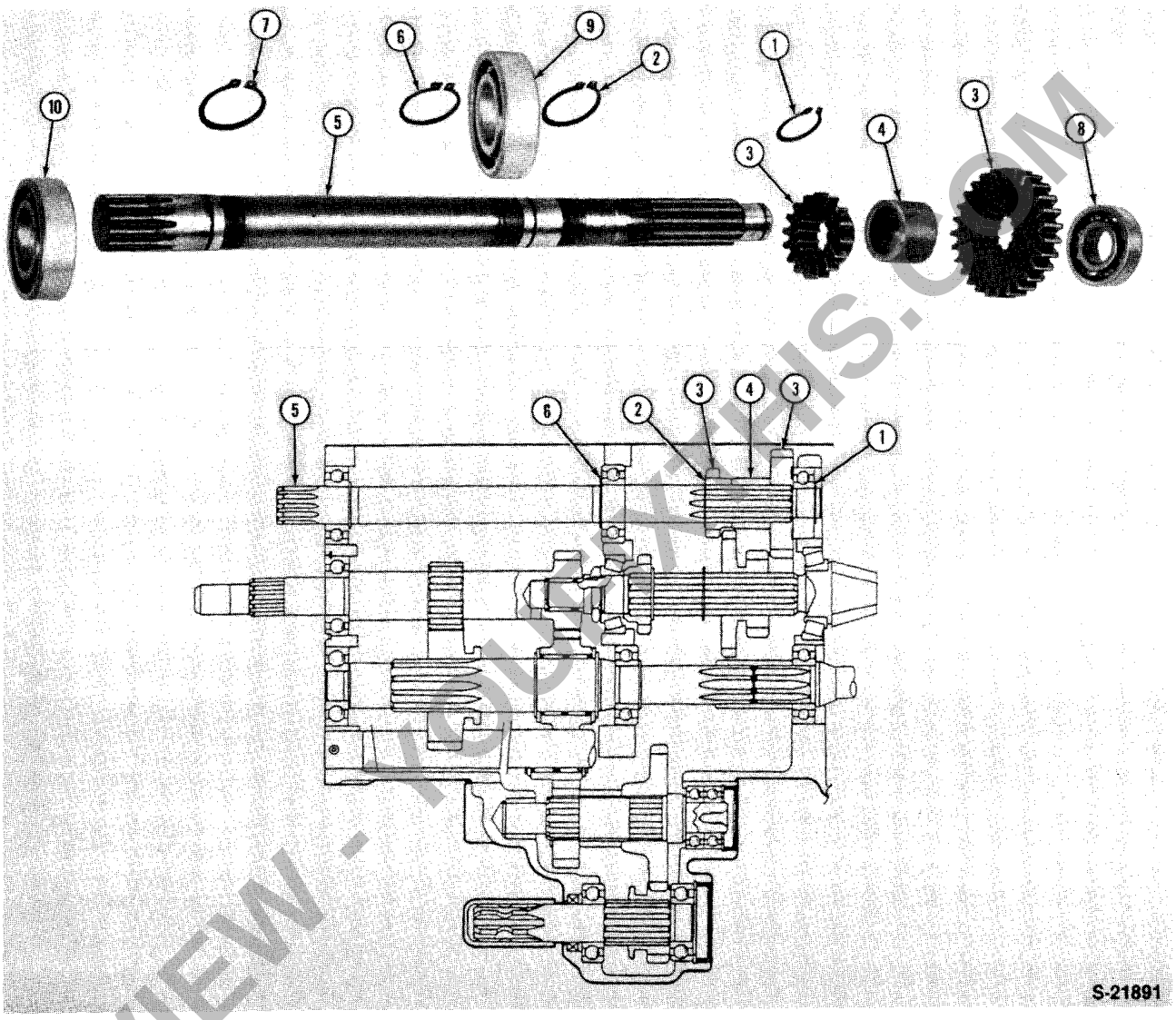

Figure 88
Main Shaft Removal

1. Snap Ring
2. Snap Ring
3. Fixed Gears
4. Collar
5. Main Shaft
6. Snap Ring
7. Snap Ring
8. Bearing
9. Bearing
10. Bearing

PREVIEW - YOUFIXTHIS.COM

Download full manual at youfixthis.com

2. Remove the retaining ring (12), pinion shafts (9 and 10), thrust washers (7), pinion gears (6), side gears (5) and thrust washers (4) from the case.

INSPECTION

DIFFERENTIAL GEAR ASSEMBLY

1. Inspect the gears for excessive wear or damage.
2. Inspect and measure the thickness of thrust washers for excessive wear. See "Specifications," Chapter 2.
3. Inspect the differential pinion shaft and gears for excessive wear. See "Specifications," Chapter 2.
4. Inspect the pinion gear and ring gear tooth wear pattern. See "Specifications," Chapter 2.
5. Inspect bearings for excessive wear or binding when rotated by hand.

ASSEMBLY

NOTE: *When the drive pinion, ring gear, bearing or other components are reused, reassemble using the same shims. However, when the drive pinion and ring gear are replaced, adjust as described below:*

Increase or decrease the number of shims at the back of the drive pinion to cover the difference between the allowances of old pinion and that of new pinion which are marked on the drive pinion ends (allowances of old pinion minus that of new pinion), Figure 13.

For example:

Allowances of replaced drive pinion:	−0.2
Allowances of new drive pinion	+0
In this case (−0.2) − +0) =	−0.2
Decrease the shims by 0.2 mm	

1. Assemble the differential pinion shaft, pinions, thrust washers and side gears in the case as shown, Figure 12.
2. Install the ring gear to the case using new bolts and locking plates.

   Tighten the bolts to the specified torque and secure with the locking plates.

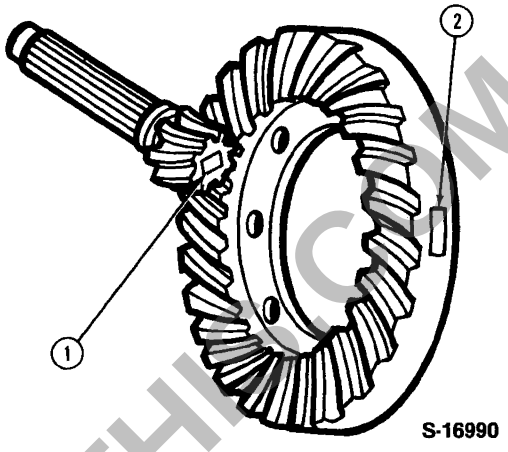

Figure 13
Ring Gear and Pinion — Tolerance Stamping
1. Tolerance Stamp — Pinion
2. Assembly Number

NOTE: *Factory installed ring gear bolts are coated with sealant and no locking plates are used. Do not reuse these bolts on reassembly. Use only new bolts with locking plates (16), Figure 12.*

3. Assemble the thrust washer, shims and rear pinion shaft bearing on the shaft as shown, Figure 14.

   Install the pinion assembly into the housing bore from the rear while assembling the sliding gear, snap ring and FWD gear if required.

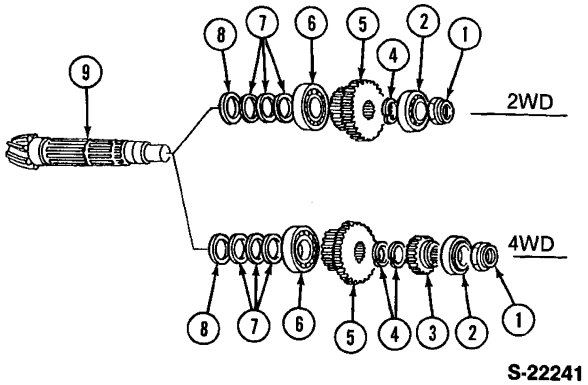

Figure 14
Drive Pinion Installation
1. Locknut
2. Bearing
3. FWD Gear
4. Snap Ring
5. Sliding Gear
6. Bearing
7. Shims
8. Thrust Washer
9. Drive Pinion

PREVIEW - YOUFIXTHIS.COM
Download full manual at youfixthis.com

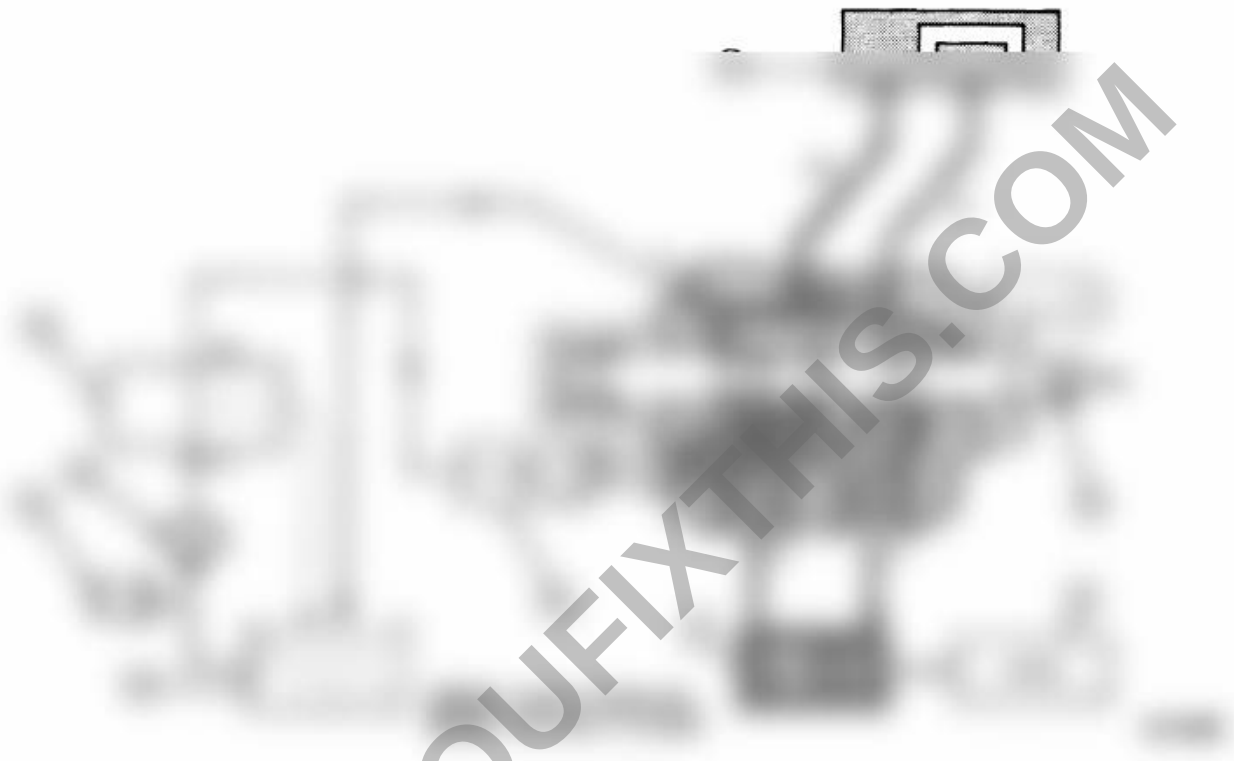

Blurred on purpose. The manual you buy has this page in full quality.

PREVIEW - YOUFIXTHIS.COM

Download full manual at youfixthis.com

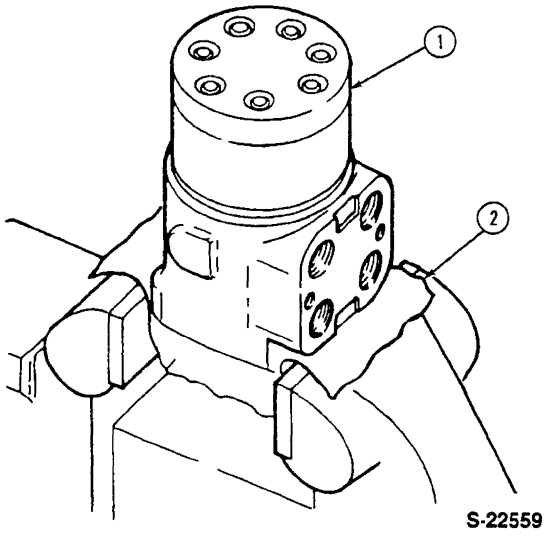

Figure 29
Control Valve Disassembly

1. Valve Assembly
2. Soft Jaw — Inserts

5. Remove the drive shaft (18), spacer plate (17) and third large O-ring (16), Figure 30.

6. Remove the check ball (24), Figure 30.

7. Remove the retaining ring (2), Figure 30 and (1), Figure 31.

NOTE: *Remove the valve from the vise and place on a clean lint-free shop towel. Use care in handling the valve parts so as not to mar or damage the precision finishes.*

8. Rotate the spool and sleeve to position the pin horizontally. Gently push on the bottom end of the spool and sleeve forcing the gland (3), Figure 30 and (1), Figure 32 out of the valve body.

9. Separate the seals (1) and (5) from the gland, Figure 30.

10. Remove the thrust bearing (7) and two bearing races (6), Figure 30.

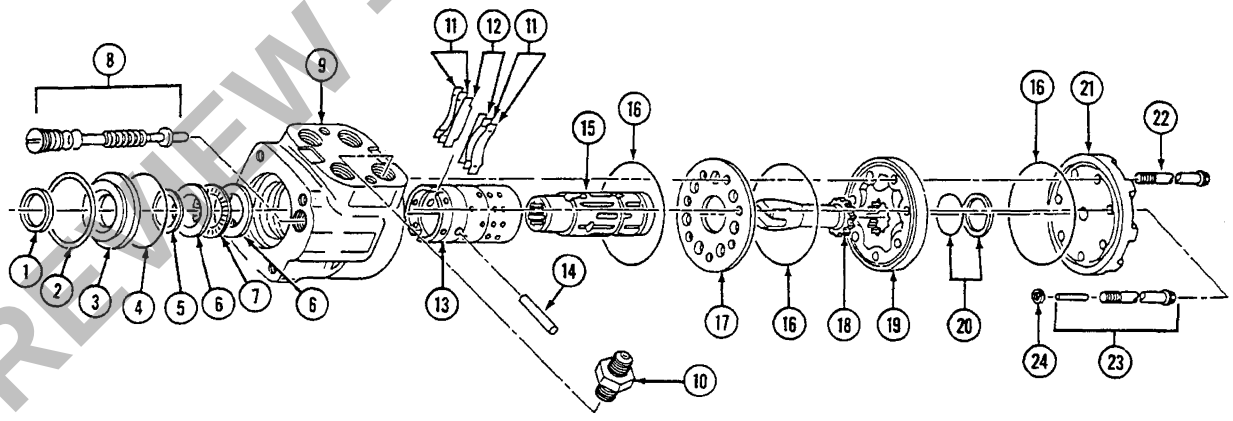

Figure 30
Power Steering Control Valve Disassembly

1. Seal — Dust
2. Retaining Ring
3. Seal Gland
4. O-Ring
5. Oil Seal
6. Bearing Race
7. Bearing
8. Relief Valve Assembly
9. Body
10. Connector
11. Centering Spring (Curved)
12. Springs (Flat)
13. Sleeve
14. Pin
15. Spool
16. O-Rings
17. Spacer Plate
18. Shaft
19. Gerotor Pump
20. Seal Assembly
21. End Cap
22. Bolts
23. Check Ball and Retainer Bolt
24. Ball (Check)

PREVIEW - YOUFIXTHIS.COM
Download full manual at youfixthis.com

PART 10
FRONT AXLE

Chapter 3
TROUBLE SHOOTING AND SPECIFICATIONS

Section		Page
A.	TROUBLE SHOOTING	17
B.	SPECIFICATIONS	18

PREVIEW - YOUFIXTHIS.COM

A. TROUBLE SHOOTING

TROUBLE	POSSIBLE CAUSE
Front Wheel Shimmy	1. Worn spindle and/or bushings. 2. Worn pivot shaft and/or bushings. 3. Loose wheel hub nut (2WD). 4. Loose tie rod. 5. Loose spindle arm.
Hard Steering	1. Spindle bushings lack lubrication. 2. Damaged spindle and/or spindle bushings. 3. Damaged thrust bearing. 4. Faulty steering gear (See Part 9).
Loose Spindle	1. Worn bushings. 2. Worn or damaged thrust bearing. 3. Worn spindle shaft.

Download full manual at youfixthis.com

PREVIEW ONLY

You're viewing 18 of 366 pages

The full manual includes:

- All 366 pages, complete
- Searchable PDF (find any keyword)
- No watermarks
- Instant download
- Print-ready quality

GET FULL MANUAL NOW

New Holland 1120, 1220 Repair Manual

Scan or click anywhere
youfixthis.com

Click anywhere on this page to get the full manual