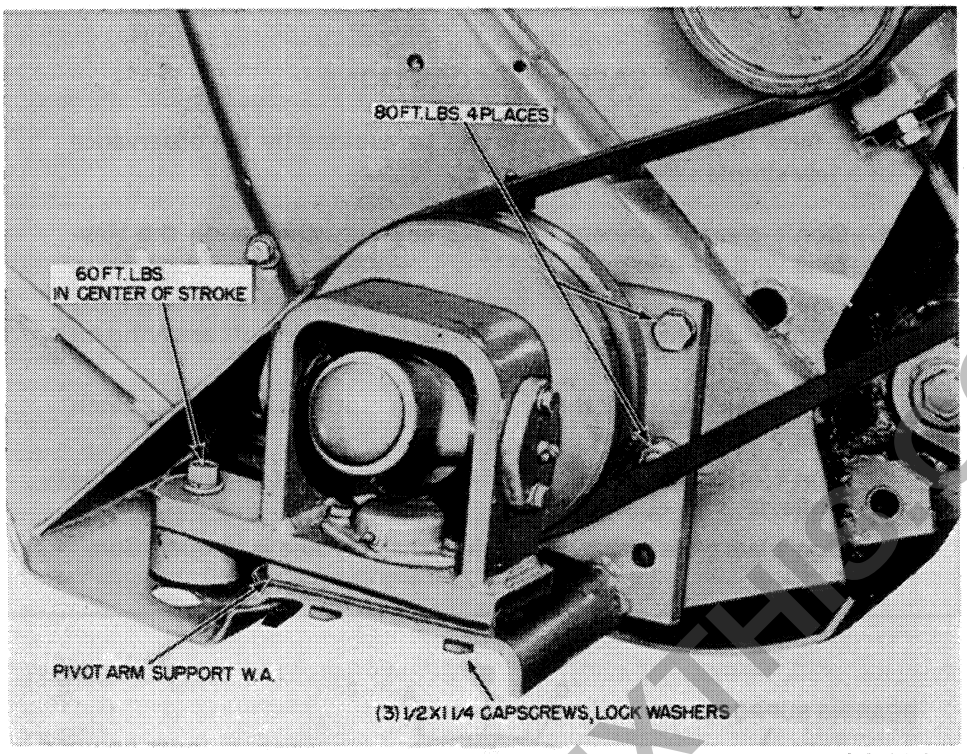

FIGURE 2

possible and then backing them off to the desired setting. When backing the nuts off it will be necessary to sharply rap the hub and/or the sheave.

2. The yoke weld assembly tapered roller bearings are adjusted by means of shims under the caps. If play develops in these bearings, remove shims as required to remove play.

   NOTE: It is normal for the sickle drive assembly to run quite warm when correctly adjusted. As long as the paint does not blister or dis-color after 1/2 hour operation the adjustment should be O.K.

   The assembly should be repacked with a good grade of gun grease once each season.

DIS-ASSEMBLY

The sickle drive assembly can be serviced on the Haybine or it can be removed by removing the knife head bolt and the six mounting bolts.

For complete dis-assembly, do the following:

1. Remove the hub caps, A, Figure 1, and the cotter pins B.
2. Loosen the slotted nuts, C, but leave them threaded on the ends of the spindle to prevent the gear puller from slipping off.
3. Remove the three ½ x 1¼ cap screws, Fig. 2, securing the pivot arm support W.A.
4. Use a gear puller to remove the yoke weld assembly and hub assembly. It will most likely be necessary to rap the puller to break the bearings loose.
5. The yoke weld assembly can be disassembled from the hub by removing both caps and shims. Then use a bearing puller to remove one of the cone and seals, D. Normally this part will be damaged when it is removed. The yoke weld assembly can be removed from the hub after removing the one cone and seal.
6. The sheave can be dismounted from the wobble joint spindle by removing the six flat allen head cap screws, E. These can be removed either by an allen wrench or hammer and sharp center punch.
7. To disassemble the wobble joint spindle from the bearing support, use a gear puller or press if available.
8. The pivot arm support W.A. can be removed from the yoke weld assembly by removing the bearing cap, loosening the locking collar, and then pulling out the pivot arm support W.A.

ASSEMBLY

Use the drawing as a guide for correct assembly. Adjust the bearings as recommended in the adjustment area. Be sure the six flat allen head cap screws, E are securely tightened. When reinstalling the complete drive assembly on the Haybine the four 5/8 Grade 5 fine thread cap screws should be tightened to 80 foot pounds of torque.

When installing the knife head bolt, be sure it is tightened to 60 foot pounds of torque when the yoke weld assembly is in the center of its stroke.

PREVIEW YOUFIXTHIS.COM
Download full manual at youfixthis.com

TROUBLE SHOOTING

POSSIBLE PUMP TROUBLE	CAUSE	REMEDIES
1. Noisy pump caused by cavitation.	a. Oil supply low. b. Oil too heavy. c. Oil filter plugged. d. Suction line plugged or too small.	a. Fill reservoir. b. Change to proper viscosity. c. Clean filters. d. Clean line and check for size.
2. Oil heating.	a. Oil supply low. b. Contaminated oil. c. Setting of relief valve too high or too low. d. Oil in system too light.	a. Fill reservoir. b. Drain reservoir and refill with clean oil. c. Set to correct pressure. d. Drain reservoir and refill with proper viscosity oil.
3. Shaft seal leakage.	a. Worn shaft seal. b. Broken moulded "V" seal or back-up gasket. c. Bearings out of position. d. Excessive internal wear.	a. Replace shaft seal. b. c. d. If replacing the shaft seal does not stop leakage the pump should be dis-assembled and checked for items b, c and d.
4. Foaming oil.	a. Low oil level. b. Air leaking into suction line. c. Wrong kind of oil.	a. Fill reservoir. b. Tighten fittings. c. Drain and fill reservoir with non-foaming oil.

PREVIEW - YOUFIXTHIS.COM

Download full manual at youfixthis.com

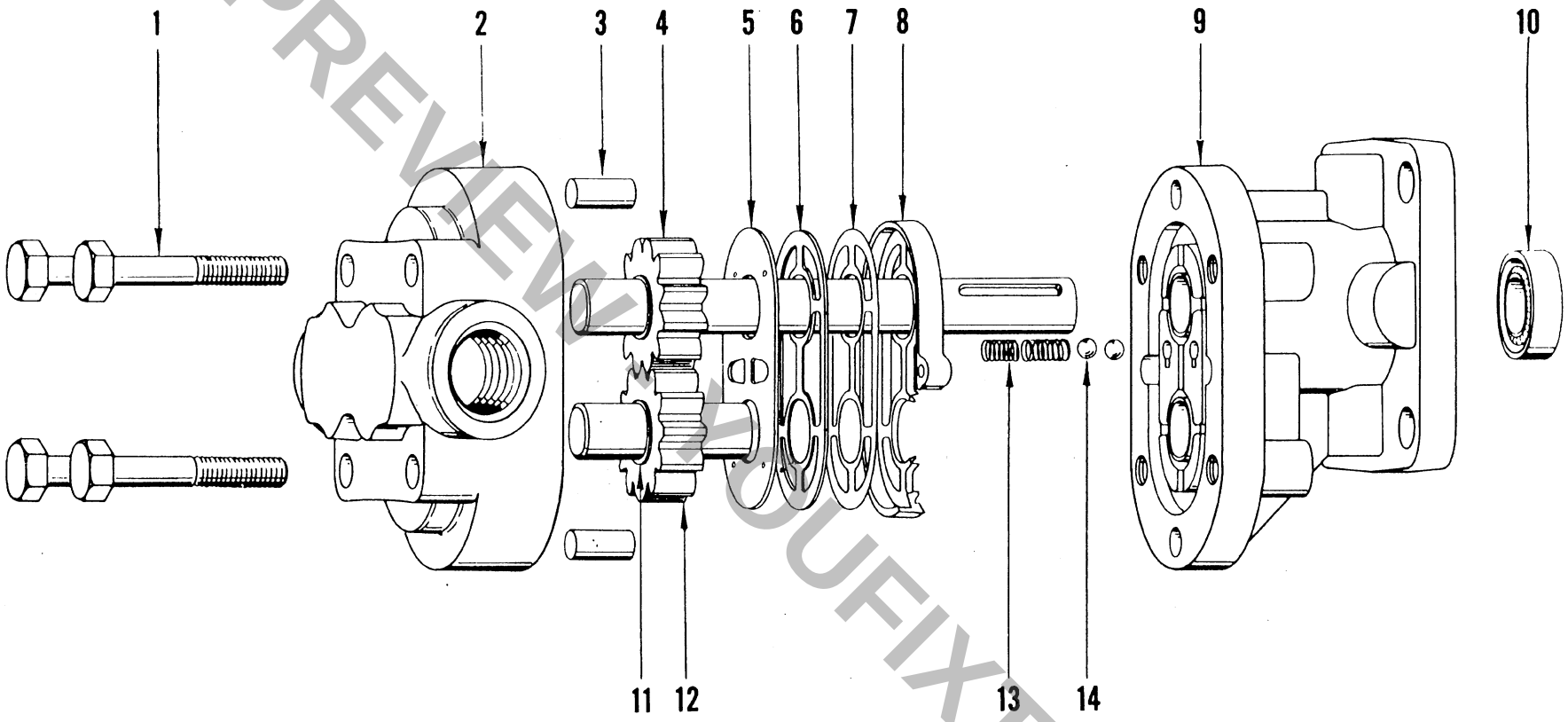

FIGURE 20

PARTS LIST

REFERENCE NUMBER	DESCRIPTION	REQ'D. PER ASS'Y.
1	Cap Screws	4
2	Rear Housing Assy.	1
3	Dowel Pin	2
4	Drive Gear Assy.	1
5	Diaphragm	1
6	Back Up Gasket	1
7	Protector Gasket	1
8	Moulded "V" Seal	1
9	Front Plate Assy.	1
10	Shaft Seal	1
11	Snap Ring	4
12	Idler Gear Assy.	1
13	Springs	2
14	Steel Ball	2

PREVIEW - YOUFIXTHIS.COM
Download full manual at youfixthis.com

FOREWORD

The purpose of this manual is to provide in condensed form service and maintenance information which will serve as a guide to a serviceman when repairing or rebuilding New Holland equipment in the shop and be of help to him in diagnosing and correcting service difficulties in the field.

It is intended that the operator's manuals and assembly instructions issued with each machine be used in conjunction with this manual, since much of the information contained herein is condensed or supplementary in nature.

CONTENTS

	PAGE
Cessna Gear Pump	12
Chain Case Repair	11
Directional Control Valve	18
Hydraulic Cylinders	16
Procedure for Removing Roll Bearings	5
Repair of Front Variable Drive Sheave Assembly	6
Repair of the Planetary Gear Boxes	8
Roll Replacement	6
Sickle Drive Assembly	3

GENERAL INFORMATION

In the following instructions "left" and "right" are determined from a position facing the direction of travel. Unless otherwise specified, installation of any bolt includes the nut and the lock washer.

Use flat washers on all bolts installed in slotted holes.

© 1968 NEW HOLLAND DIVISION OF SPERRY RAND CORPORATION, NEW HOLLAND, PENNSYLVANIA 17557

PREVIEW - YOUFIXTHIS.COM

Download full manual at youfixthis.com

SAFETY PRECAUTIONS

Most farm implement accidents can be avoided by the observance of a few simple safety precautions:

1. Don't clean, lubricate, or make any adjustments on the Haybine while it is in motion.
2. Don't start the Haybine until you know that everyone is clear of the machine and have made sure that no tools are lying on the machine.
3. Don't work around the unit in loose clothing that might catch in any of the moving parts.
4. Don't attempt to pull material from any part of the Haybine while it is in operation.
5. Don't leave the tractor seat while the Haybine is in operation.

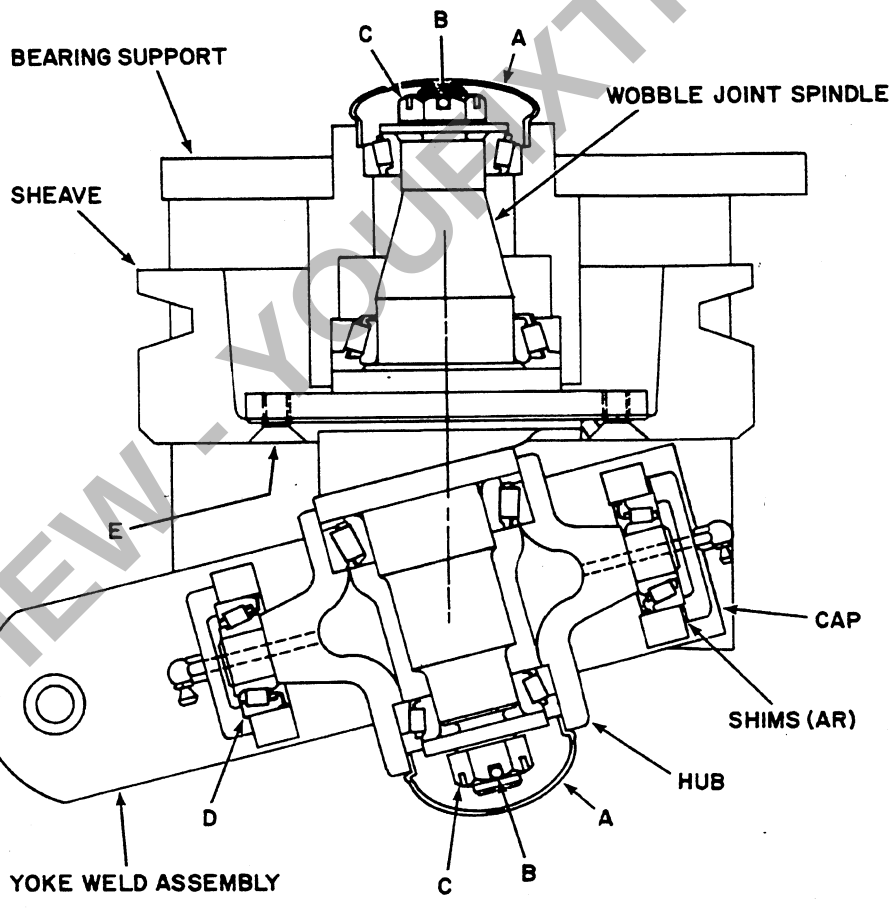

FIGURE 1

ADJUSTMENT

1. The wobble joint spindle tapered roller bearings are adjusted by means of the slotted nuts at each end of the spindle. Adjust the bearings so that it requires 6 to 12 inch pounds of force to rotate the sheave. Make sure there is no end play in either the spindle, bearing support and spindle, hub area. This can be assured by drawing the slotted nuts as tight as

PREVIEW - YOUFIXTHIS.COM
Download full manual at youfixthis.com

PREVIEW ONLY

You're viewing 5 of 24 pages

The full manual includes:

- All 24 pages, complete
- Searchable PDF (find any keyword)
- No watermarks
- Instant download
- Print-ready quality

GET FULL MANUAL NOW

New Holland 1469 Service Manual

Scan or click anywhere
youfixthis.com

Click anywhere on this page to get the full manual