returns to the main oil gallery in the area of the drilled bolt located on the side of the block. Oil flow in the main oil gallery extends to the four main bearings. Oil flow to the main bearings passes through drilled passages in the crankshaft to the three connecting rod bearings. The remaining portion of the oil flow is directed through the external tube to the rocker arm assembly. Oil flows from the external tube into a passage in the rocker arm bracket to the rocker shaft.

Oil leakage from clearance between the rocker arms and the shaft overflows in the valve cover and lubricates the valve stems, push rods and tappets.

The relief valve is mounted in the side of the block and intersects the main oil passage. When the oil pressure exceeds the rated pressure, oil is by-passed through the relief valve directly to sump.

The cylinder walls, pistons and piston pins are splash lubricated by the crankshaft.

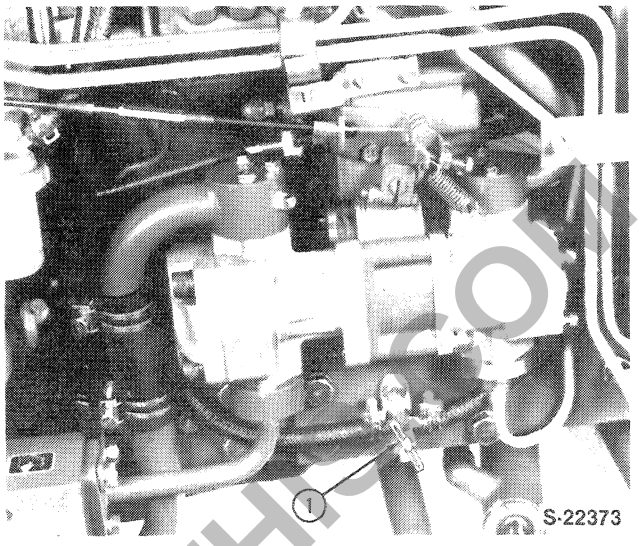

Figure 1
Radiator Drain Cock

1. Coolant Drain Cock

B. ENGINE OVERHAUL

CYLINDER HEAD AND RELATED COMPONENTS

REMOVAL

1. Drain the radiator assembly, Figure 1.
2. Remove the air cleaner assembly along with the air cleaner hoses, Figure 2.
3. Remove the upper radiator hose from the cylinder head, Figure 2.
4. Remove the exhaust muffler and manifold assembly, Figure 3.

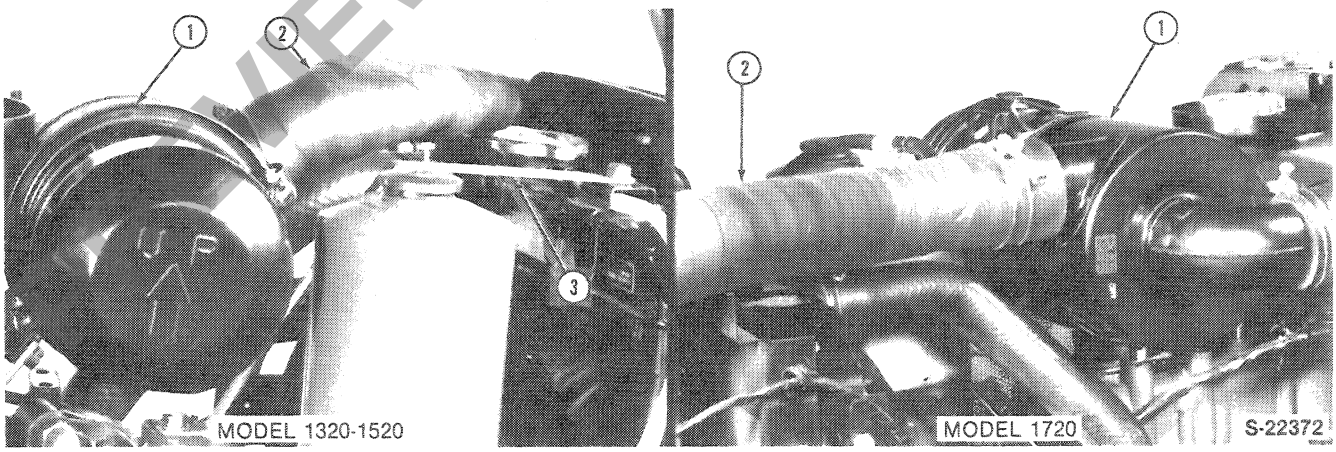

Figure 2
Air Cleaner Removal

1. Air Cleaner Assembly
2. Air Intake Tube
3. Radiator Support Brace (Model 1320/1520)

Download full manual at youfixthis.com

METRIC BOLT TORQUE SPECIFICATIONS

Bolt Size	Grade No.	Coarse Thread			Fine Thread		
		Pitch (mm)	Pounds-Feet	Newton-Meters	Pitch (mm)	Pounds-Feet	Newton-Meters
M6	4T	1.0	3.6– 5.1	4.9– 6.9	–	–	–
	7T		6.1– 8.3	8.3– 11.3			
	10T		8.7– 11.6	11.8– 15.7			
M8	4T	1.25	9.4– 12.3	12.7– 16.7	1.0	11.2– 14.8	15.2– 20.1
	7T		16.6– 21.0	22.6– 28.4		19.5– 25.3	26.5– 34.3

PREVIEW - YOUFIXTHIS.COM

Blurred on purpose. The manual you buy has this page in full quality.

Download full manual at youfixthis.com

PART 1
ENGINE SYSTEMS
MODELS 1320-1520-1720

Chapter 3
TROUBLE SHOOTING, SPECIFICATIONS AND SPECIAL TOOLS

Section		Page
A.	TROUBLE SHOOTING	41
B.	SPECIFICATIONS	45
C.	SPECIAL TOOLS	52
D.	COMPRESSION TEST AND TOOLS	53

PREVIEW - YOUFIXTHIS.COM

A. TROUBLE SHOOTING

ENGINE

CONDITION	POSSIBLE CAUSES
Engine Does Not Develop Full Power	1. Clogged air cleaner. 2. Fuel line obstructed. 3. Improper injection timing. 4. Improper nozzle injection pressure and angle. 5. Low cylinder compression. 6. Insufficient fuel injection. 7. Improper valve lash adjustment. 8. Burned, worn or sticking valves. 9. Blown head gasket. 10. Worn or sticking piston rings. 11. Faulty engine stop solenoid.
Engine Will Not Stop	1. Faulty engine stop solenoid. 2. Faulty starter switch.
Low Cylinder Compression	1. Burned, worn or sticking valves. 2. Bent valve stem. 3. Broken or weak valve spring. 4. Blown cylinder head gasket. 5. Worn or sticking piston ring. 6. Scored piston.
Poor Engine Idling	1. Improper injection timing. 2. Air in injection pump. 3. Improper governor adjustment.

Download full manual at youfixthis.com

B. SPECIFICATIONS

GENERAL SPECIFICATIONS

Tractor Model	1320	1520	1720
Engine Model	J823	J843	N843
Number of Cylinders	3	3	3
Bore x Stroke	3.22 x 3.15 in. (82 x 80 mm)	3.31 x 3.15 in. (84 x 80 mm)	3.31 x 3.54 in. (84 x 90 mm)
Displacement	77.2 cu. in.	81.1 cu. in.	91.2 cu. in.
Compression Ratio	22:1	22:1	22.5:1
Rated Speed (rpm)	2500	2500	2500

Blurred on purpose. The manual you buy has this page in full quality.

PREVIEW - YOUFIXTHIS.COM

Download full manual at youfixthis.com

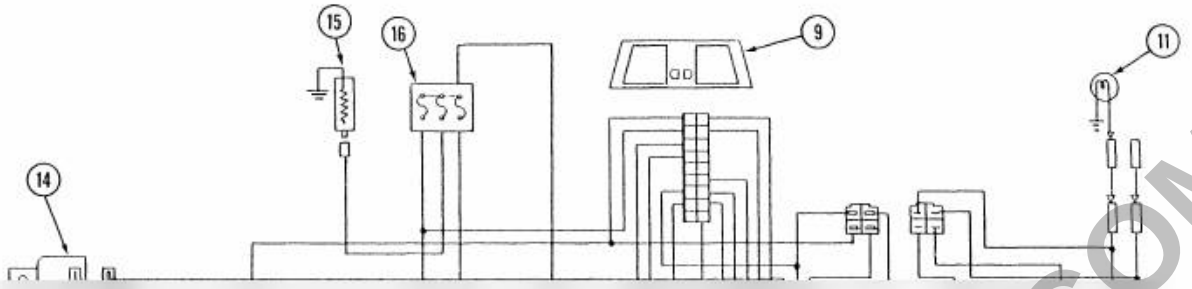

Blurred on purpose. The manual you buy has this page in full quality.

PREVIEW - YOUFIXTHIS.COM

Download full manual at youfixthis.com

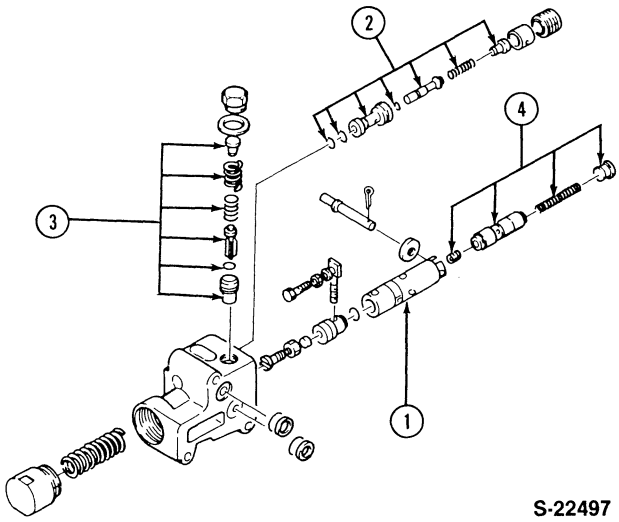

Figure 7
Draft Control Valve Assembly Components

1. Control Valve Spool
2. Lowering Valve
3. Check Valve
4. Shut-Off Valve

OIL FLOW — CONTROL SYSTEM
NEUTRAL POSITION
Reference — Figure 8

In the neutral position the control valve spool (1) is centered in the valve body. Oil from the hydraulic pump is directed through a small passage in the valve spool to the rear face of the control valve plunger (2). The oil pressure moves the plunger compressing the plunger spring (3) and aligns the passages (4) in the control valve and plunger. Oil flows from the pump through the passages (4) and returns to sump.

Oil trapped in the lift cylinder, under pressure caused by the weight of the implement on the lift arms, exerts pressure on the cylinder side of the check valve (5), keeping it in a closed position. The lowering valve spool (6), positioned by the spring (7), retains the oil in the lift cylinder and maintains the implement in a fixed position.

RAISING POSITION
Reference — Figure 9

When the draft control lever is moved to the "raise" position, the control valve spool (1) is moved inward (rearward). The oil passages in the control valve spool and plunger (2) are no longer aligned and oil flows around the control valve and lowering valve spool (3), through passage (4), to the check valve (5). The oil pressure against the check valve overcomes the check valve spring (6), and lift cylinder oil static pressure on the check valve, raising the check valve off its seat and allowing oil to flow to the lift cylinder to raise the implement.

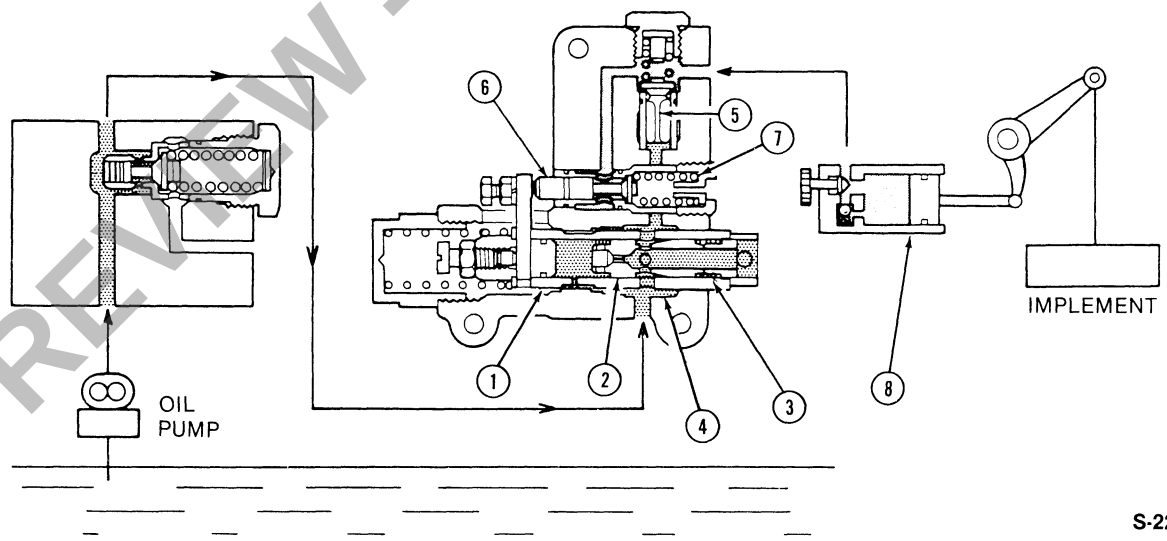

Figure 8
Oil Flow — Neutral Position
(Position Control Valve)

1. Control Valve Spool
2. Plunger
3. Plunger Spring
4. Oil Passage Ports
5. Check Valve
6. Lowering Valve Spool
7. Lowering Valve Spool Spring
8. Lift Cylinder

PREVIEW - YOUFIXTHIS.COM

Download full manual at youfixthis.com

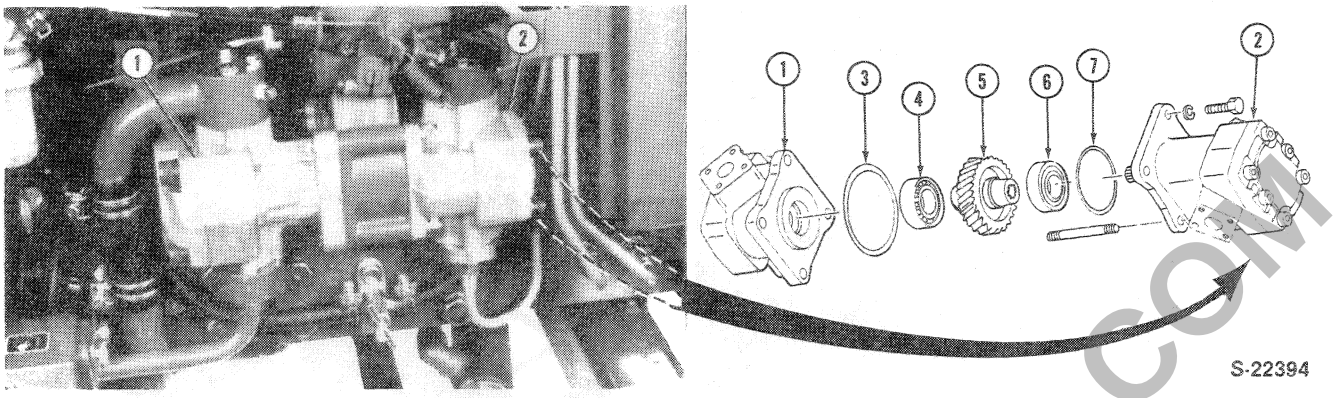

Figure 41
Hydraulic Pump Drive Gear Removal

1. Hydraulic Pump Assembly
2. Power Steering Pump Assembly
3. O-Ring
4. Bearing
5. Drive Gear
6. Bearing
7. O-Ring

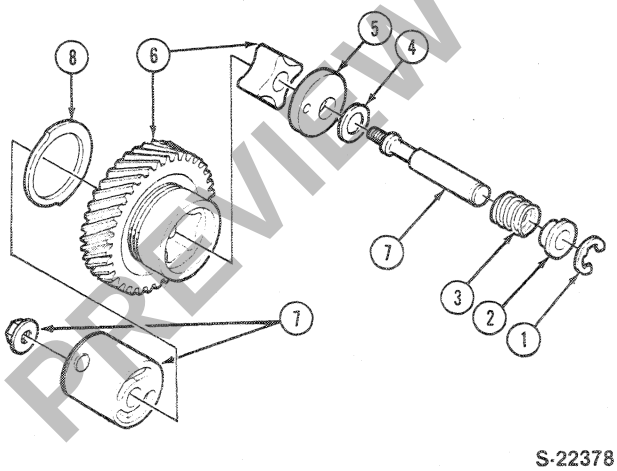

Figure 42
Engine Oil Pump Components — Model 1720

1. "E" Snap Ring
2. Collar
3. Spring
4. Shim
5. Cover
6. Rotor and Gear Assembly
7. Port Block and Shaft Assembly
8. Thrust Washer

1. Install a new gasket and the front adaptor plate to the engine block.

2. Install the tachometer drive shaft and plate, Figure 47.

3. Position the two spacers, tachometer drive gear, camshaft gear, key, flyweight assembly, pins and slider on the camshaft, Figure 48.

4. Assemble the pump drive gear and retaining spring. Position the assembly on the port block, Figure 49. Turn the crankshaft to align the timing marks between the crankshaft and camshaft gears with the injection pump drive gear and install the pump drive gear.

5. Position the oil pump inner rotor on the shaft inside the idler gear and install the cover, shim, spring, collar and "E" snap ring, Figure 42.

PREVIEW - YOUFIXTHIS.COM

Download full manual at youfixthis.com

PART 1
ENGINE SYSTEMS
MODELS 1320-1520-1720

Chapter 1
ENGINE AND LUBRICATION SYSTEM

Section		Page
A.	DESCRIPTION AND OPERATION	1
B.	ENGINE OVERHAUL	2

Chapter 2
COOLING SYSTEM

Section		Page
A.	DESCRIPTION AND OPERATION	33
B.	OVERHAUL	34

Chapter 3
TROUBLE SHOOTING, SPECIFICATIONS AND SPECIAL TOOLS

Section		Page
A.	TROUBLE SHOOTING	41
B.	SPECIFICATIONS	45
C.	SPECIAL TOOLS	52
D.	COMPRESSION TEST AND TOOLS	53

PREVIEW - YOUFIXTHIS.COM

PRINTED IN U.S.A.

Download full manual at youfixthis.com

PRODUCTION DATE CODES AND SERIAL NUMBERS

The Tractor Identification Plate is located on the left side of the transmission case on the Ford 1320-1520 and 1720 Tractors and is stamped with the following information:

Production Identification Number — Two letter prefix followed by the Tractor Serial Number.

Whenever effecting repair or overhaul the relevant series information should be noted and used when referring to Service Bulletins and/or the Parts Catalog.

Model — Production Model Code

Unit — Production Unit Date Code*

Engine — Serial Number and Engine Production Date Code

TRACTOR SERIES IDENTIFICATION PLATE

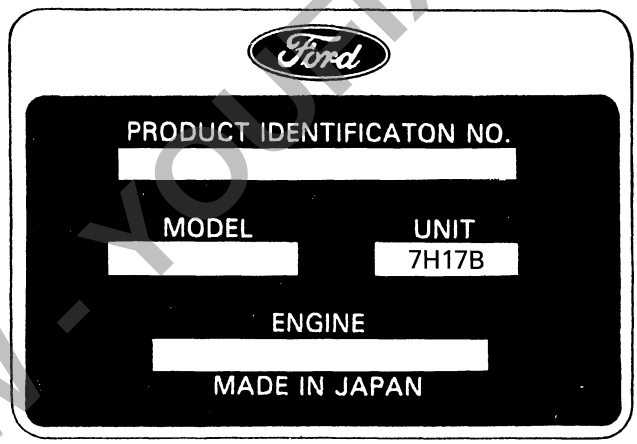

First Number YEAR	First Letter MONTH		Second Number DAY OF MONTH	Second Letter PRODUCTION SHIFT
4 — 1984	A—Jan.	G—July	01/28/29/30/31	A—Midnight
5 — 1985	B—Feb.	H—Aug.		B—Day
6 — 1986	C—March	J—Sept.		C—Afternoon
7 — 1987	D—April	K—Oct.		
8 — 1988	E—May	L—Nov.		
	F—June	M—Dec.		

*Example of Production Unit Date Code 7 H 17 B

- 7 — Year of Final Assembly 1987
- H — Month of Year August
- 17 — Day of Month (Seventeen)
- B — Shift Period Day

PREVIEW - YOUFIXTHIS.COM

Download full manual at youfixthis.com

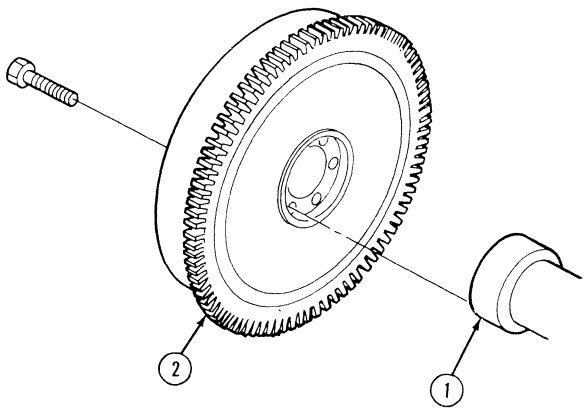

S-22384

Figure 69
Flywheel Removal
1. Crankshaft 2. Flywheel

3. To install a new ring gear, heat the new ring gear to 245-300ºF. (120-150ºC) from the inside only. Be careful not to overheat the ring gear teeth. Use a temperature sensitive crayon to mark the inside of the ring gear. Quench the ring gear quickly to obtain a good shrink fit onto the flywheel.

INSTALLATION

Installation follows the removal procedure in reverse.

Tighten the flywheel retaining bolts or crankshaft nut to the specified torque. See "Specifications," Chapter 3.

CRANKSHAFT — REMOVAL

1. Remove the engine from the tractor. See "Separating the Tractor," Part 12.

2. Remove the cylinder head assembly, front timing gear cover, clutch, flywheel, pistons and rods as previously described.

   - Remove the rear plate, Figure 70.
   - Remove the crankshaft rear oil seal, Figure 71.
   - Remove the crankshaft bearing holder retaining bolts, Figure 72.

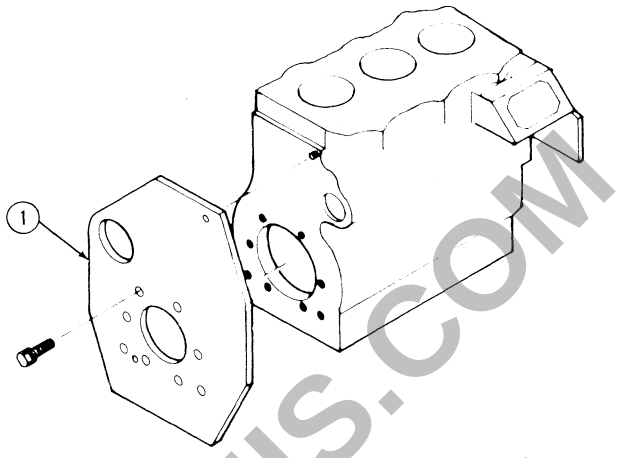

S-17975

Figure 70
Engine Rear Plate Removal — Model 1720
1. Rear Plate

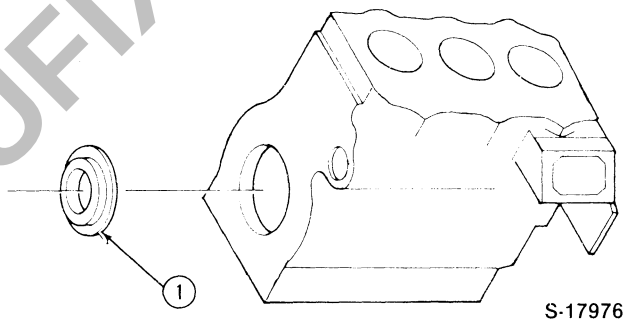

S-17976

Figure 71
Rear Oil Seal Removal — Model 1720
1. Oil Seal

   - Remove the crankshaft through the rear of the engine.

INSPECTION AND REPAIR

1. Inspect the crankshaft gear teeth for wear or damage and replace if necessary.

2. Using a micrometer, measure the crankshaft journals for size, runout, and taper Figure 73.

3. The amount of taper in a journal is the difference in the measurements taken at points 1 and 2 on a journal, Figure 73.

PREVIEW - YOUFIXTHIS.COM

Download full manual at youfixthis.com

5. Remove the injection pump.

NOTE: *If there are shims between the pump mounting flange and the engine block, carefully remove the shims and retain for reinstallation.*

INJECTION PUMP — REPAIR

If an injection pump is suspected of being faulty, it should be tested and repaired by an authorized Diesel Service Repair Station only.

INSTALLATION

Installation generally follows the removal procedure in reverse. If the pump is being replaced, or if the timing is not known, see "Injection Pump Timing and Governor Adjustments," Section C, this chapter.

Bleed the air from the fuel system. See "Bleeding the Fuel System," page 7.

C. TIMING AND GOVERNOR ADJUSTMENT

INSTALLATION USING ORIGINAL PUMP AND DRIVE COMPONENTS

NOTE: *The engine stop solenoid must be removed before installing the pump.*

1. Position the injection pump in the block using the original shim gasket or a new one of the same thickness, Figure 8.

   Connect the governor link to the pump control rack and secure with the spring pin, Figure 7.

2. Install the pump mounting bolts and tighten to the specified torque. See "Specifications," Chapter 3.

   If necessary to verify correct pump timing, spill time the pump as outlined in "Spill Timing Procedure," this section.

INSTALLING A NEW PUMP OR DRIVE COMPONENT

NOTE: *The engine stop solenoid must be removed before installing the pump.*

(Engine block, camshaft gear, camshaft assembly, idler gear, crankshaft gear, or injection pump.)

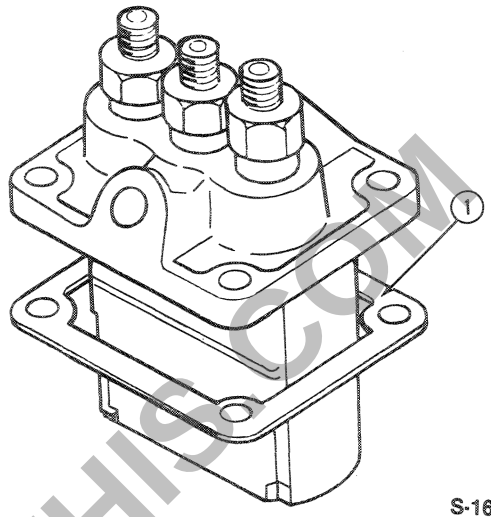

Figure 8
Injection Pump Installation — Model 1720
1. Shim Gasket

1. Position the injection pump in the block using a new shim gasket of 0.012 in. (0.5 mm) thickness, Figure 8.

2. Connect the governor link to the pump control rack and secure with the spring pin, Figure 7.

   NOTE: *Check the control rack for any binding conditions by moving the pump control lever back and forth.*

3. Install the pump mounting bolts and tighten to the specified torque. See "Specifications," Chapter 3.

SPILL-TIMING PROCEDURE

1. Remove the No. 1 delivery valve holder, spring and delivery valve piston, Figure 9.

2. Reinstall the delivery valve spring and holder. Tighten the holder finger tight.

3. Remove the valve rocker cover, Figure 10.

4. Remove the rocker shaft support assembly, Figure 11.

5. Rotate the crankshaft to align the pulley timing mark with the timing pointer, Figure 12.

   NOTE: *No. 1 cylinder must be on compression stroke. (Intake and exhaust valve rocker arms will be loose).*

PREVIEW - YOUFIXTHIS.COM

Download full manual at youfixthis.com

3. Use only a 12-volt battery with sufficient capacity for jump starting.

4. Check that all electrical switches are off and that the tractors are not touching one another.

5. Attach the end of one jumper cable to the positive terminal of the booster battery and the other end of the same cable to the positive terminal of the discharged battery.

6. Attach one end of the remaining cable to the negative terminal of the booster battery, and the other end to a solid engine ground at least 12 inches from the battery of the tractor being started — DO NOT CONNECT DIRECTLY TO THE NEGATIVE TERMINAL OF THE DEAD BATTERY.

7. Start the engine of the tractor that is providing the jump start and turn off all electrical switches.

8. Start the engine in the tractor with the discharged battery.

9. Reverse these procedural steps exactly when removing the jumper cables. The first cable to be disconnected should be the negative cable from the ground on the tractor that was being jump started.

MAINTENANCE CHECKS

During scheduled maintenance checks, the battery should be given careful attention. The life of the battery can be extended and service problems related to the battery can be reduced by regularly performing the following maintenance procedure.

1. Visually inspect the battery for damage or incorrect assembly. Repair or replace components as necessary, Figure 28.

2. Inspect the alternator drive belt condition and for proper tension. Replace or tighten the belt if necessary, Figure 29.

3. Check the electrolyte level. Add distilled water if necessary. Do not use well water, Figure 30.

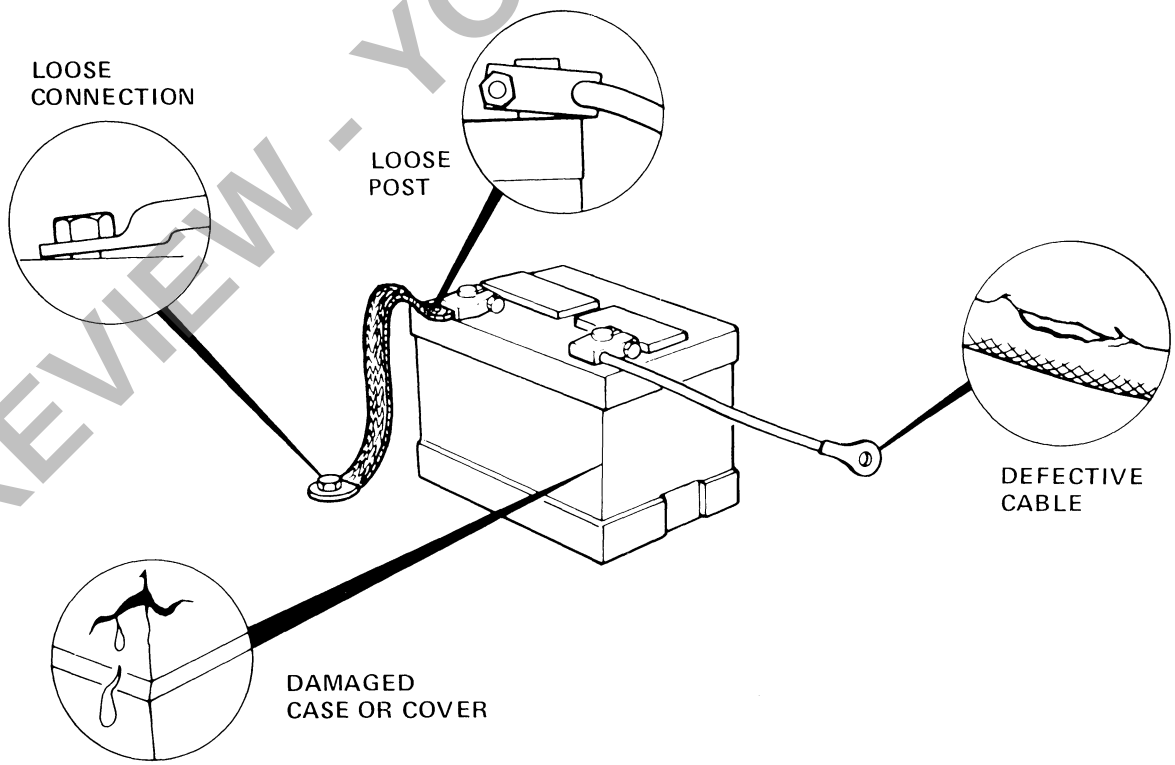

Figure 28
Battery Inspection Checks

PREVIEW - YOUFIXTHIS.COM

Download full manual at youfixthis.com

B. OVERHAUL

REMOVAL

Reference — Figure 101

1. Disconnect the wiring of the engine stop solenoid.
2. Using a pair of pliers, remove the solenoid from the injection pump.

INSPECTION

1. With the solenoid de-energized, measure the protrusion distance "A" of the plunger as shown, Figure 102.

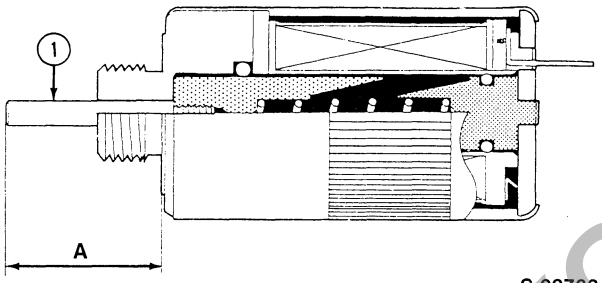

S-22763

Figure 102
Solenoid Shut-Off Position

1. Plunger Distance "A" = 1.004-1.04 in (25.5-26.4 mm)

If the measurement is not within the specified limit replace the solenoid.

PROTRUSION DISTANCE — "A", 1.004-1.04 in. (25.5-26.4 mm)

2. Connect a jumper wire from the solenoid terminal to the battery positive terminal and connect a second jumper from the battery negative terminal to the solenoid body. The solenoid plunger then will retract. Measure the protrusion distance "B", Figure 103.

If the measurement is not within the specified limit replace the solenoid.

PROTRUSION DISTANCE — "B", 0.453-0.571 in. (11.5-14.5 mm)

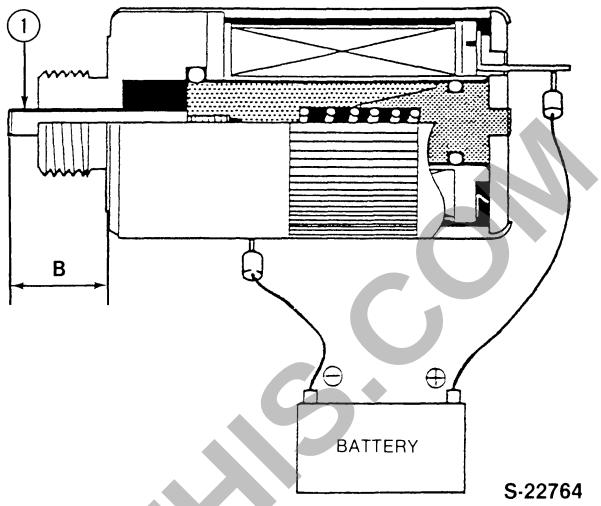

S-22764

Figure 103
Plunger Retracted Position

1. Plunger Distance "B" = 0.453-0.571 in. (11.5-14.5 mm)

3. Check the solenoid wiring continuity as follows:

- Disconnect the wiring from the solenoid spade connector.
- Using a voltmeter, touch one voltmeter lead to the wire connector and the other voltmeter lead to a good ground.
- Turn the key switch to the "ON", "START" or "HEAT" position and observe the voltmeter reading.

Test Results

Voltmeter Reading

9.0 or more volts = Good.
8.9 volts or under = Check for short, or open circuit in wiring, faulty battery, or faulty fuse.

ASSEMBLY

Assembly of the engine stop solenoid follows the disassembly procedure in reverse order.

NOTE: *Use a new sealing washer on assembly.*

PREVIEW - YOUFIXTHIS.COM
Download full manual at youfixthis.com

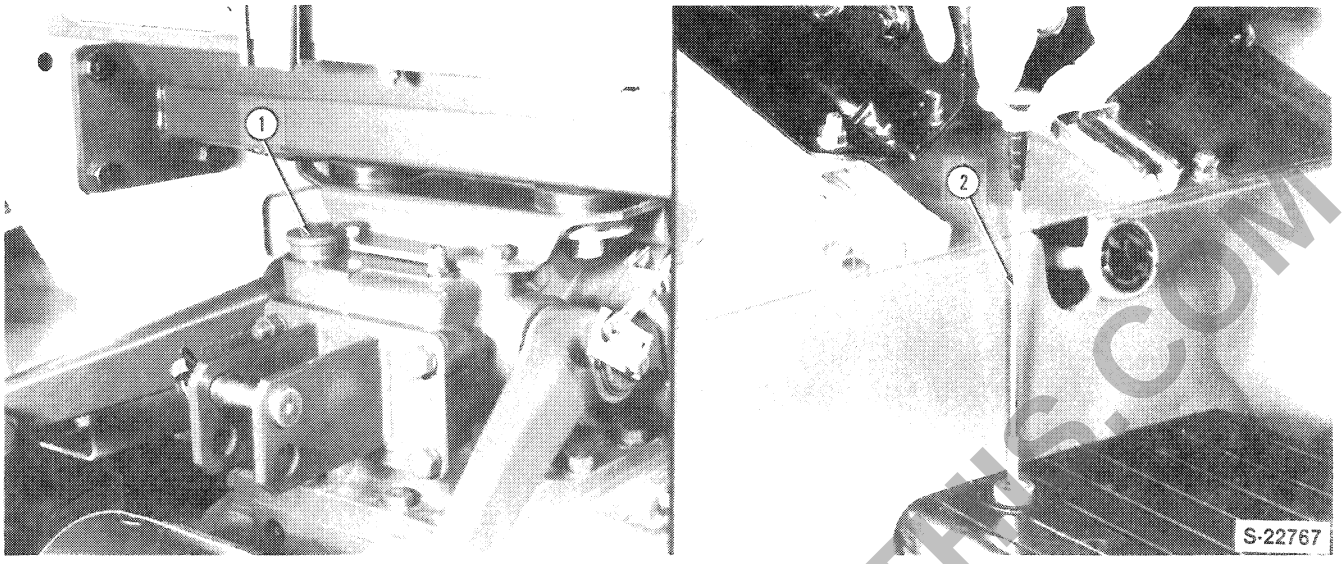

Figure 3
Transmission Hydraulic Rear Axle Oil Fill and Level Check Location
1. Oil Filler Plug
2. Dipstick

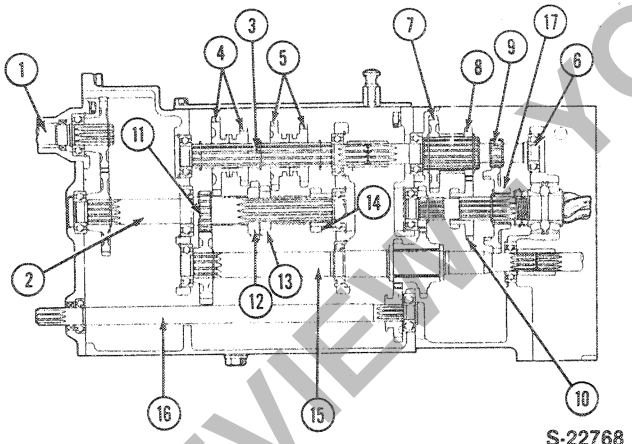

Figure 4
9 x 3 Gear Transmission — Cross-Sectional View and Identification
1. Input Shaft
2. Countershaft
3. Front Main Shaft
4. Sliding Gear (1-3)
5. Sliding Gear (2-R)
6. Rear Main Shaft
7. High Range Gear — Fixed
8. Mid-Range Gear — Fixed
9. Low Range Gear — Fixed
10. Sliding Gear (High, Middle, Low)
11. 1st Gear — Fixed
12. 3rd Gear — Fixed
13. 2nd Gear — Fixed
14. Reverse Gear — Fixed
15. PTO Countershaft
16. 4WD Drive Shaft
17. Low Range Gear — Fixed

A transmission cross-section view with gear identification is shown in Figure 4.

Power flows through the transmission are shown in Figures 5 through 16.

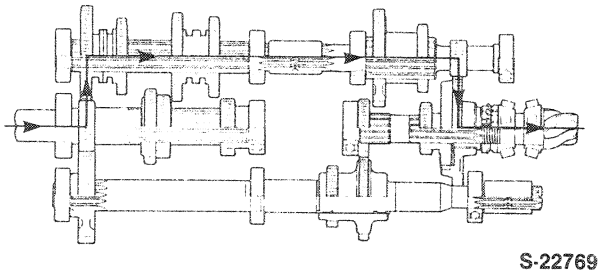

Figure 5
Power Flow — 1st Gear — Low Range

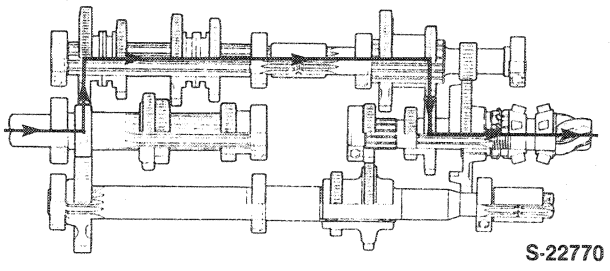

Figure 6
Power Flow — 1st Gear — Mid-Range

PREVIEW YOUFIXTHIS.COM

Download full manual at youfixthis.com

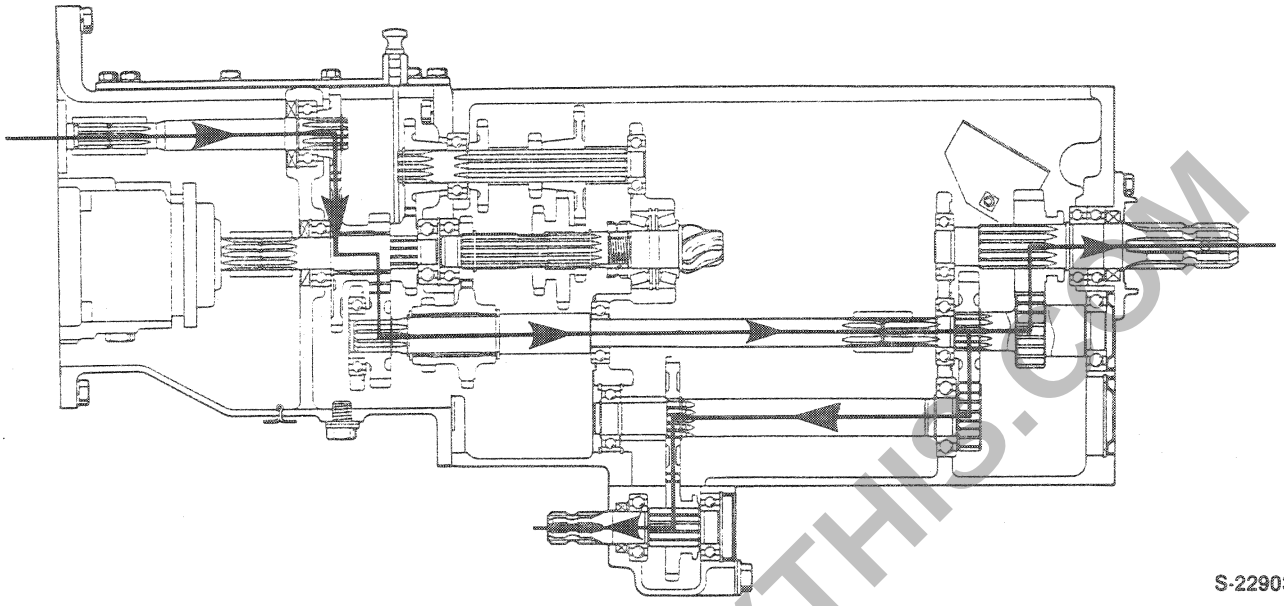

Figure 86
Power Flow — Hydrostatic Transmission — Power Take-Off

3. Remove the bearing retaining ring (8).

4. Gently drive the PTO input shaft (5) forward and remove the shaft and bearing assembly from the case.

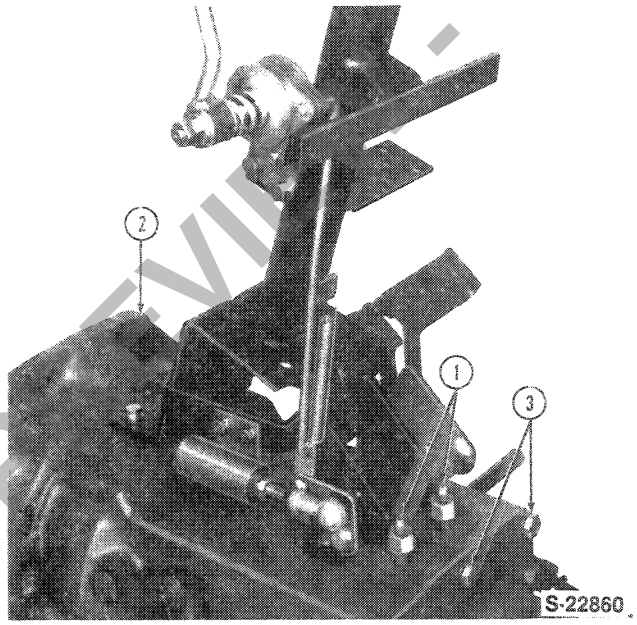

Figure 87
Clutch Housing Removal

1. Adaptors — Pressure Test Ports
2. Clutch Housing
3. Clutch Housing Attaching Bolts

TRANSMISSION INPUT SHAFT — REMOVAL

Reference — Figure 91

1. Remove the input shaft oil seal (1), Figure 91.

2. Remove the bearing retaining snap ring (2).

3. While supporting the gears, slide the input shaft and front bearing out the front of the case.

4. Remove the counter gear (7), needle bearings (6), spacer (8), and fixed gear (9), out through the top of the case.

5. If necessary, use a suitable puller and remove the bearing from the shaft.

4WD SHIFT ROD — REMOVAL

Reference — Figure 92

1. Drive the roll pin (11), Figure 92, out of the lever (7) and remove the lever.

2. Remove the shift rod (5) from the rear.

   NOTE: *Use care to not lose the detent ball and spring when separating the rod from the fork.*

3. Remove the shift fork (1) and arm (2), from the case.

Download full manual at youfixthis.com

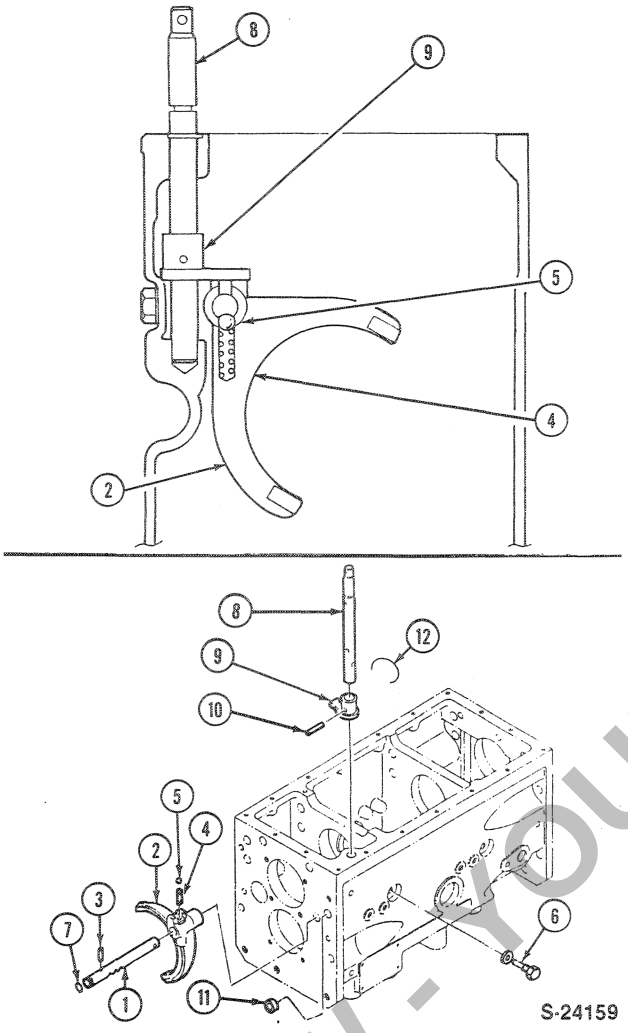

Figure 155
Shuttle Shift Fork and Rail Assembly

1. Shift Rail
2. Fork
3. Roll Pin
4. Detent Spring
5. Detent Ball
6. Retaining bolt
7. O-Ring
8. Shaft — Shift Arm
9. Shift Arm
10. Roll Pin
11. Plug
12. Locking Wire

INPUT SHAFT ASSEMBLY
Reference — Figure 157

1. Using a suitable size installer, install a new oil seal (12), in the input shaft.

2. If removed, install the snap ring (9) in the case web.

3. Insert the input shaft into the front of the case and position the gear (4) and the two snap rings (10) on the shaft.

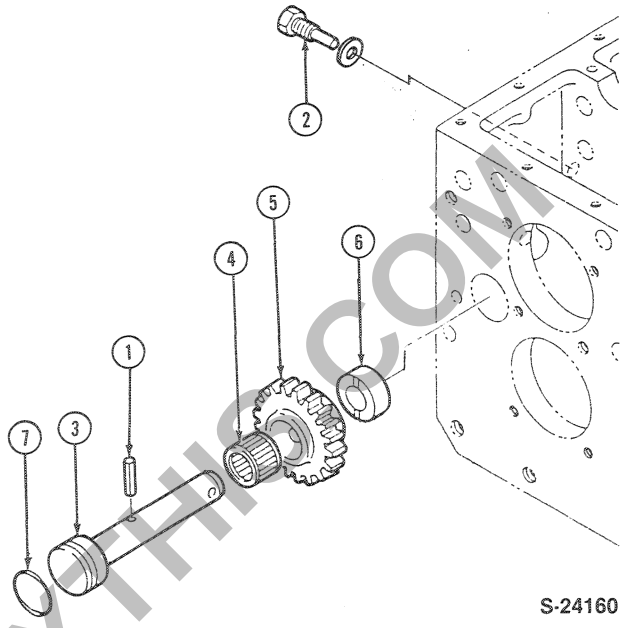

Figure 156
Reverse Idler Gear Shaft Assembly

1. Roll Pin
2. Locking Bolt
3. Reverse Idler Gear Shaft
4. Needle Bearing
5. Counter Gear
6. Thrust Washer
7. O-Ring

4. Position the gear (3) and bearing (2) on the shaft and install the two snap rings (10) in their shaft grooves.

5. Position the assembled shaft all the way into the case and install the gear (4) and front bearing (5) on the forward end of the shaft.

6. Using a suitable size installer, install a new oil seal (13) in the retainer housing.

7. With the main countershaft positioned fully rearward, determine the position of the main countershaft front bearing in relation to the front face of the transmission case. Add or subtract shims (3), Figure 158, as required to obtain zero end float of the main countershaft assembly. Shims are available in .003, .008 and .020 in (0.1, 0.2 and 0.5 mm) sizes.

8. Using a new gasket, install the retainer assembly on the front of the case.

NOTE: *Use new seal washers (8) on the retainer mounting bolts, Figure 157.*

PREVIEW - YOUFIXTHIS.COM

Download full manual at youfixthis.com

4. Install a new seal (5) in the output shaft retainer (4) and install the retainer assembly using a new gasket.

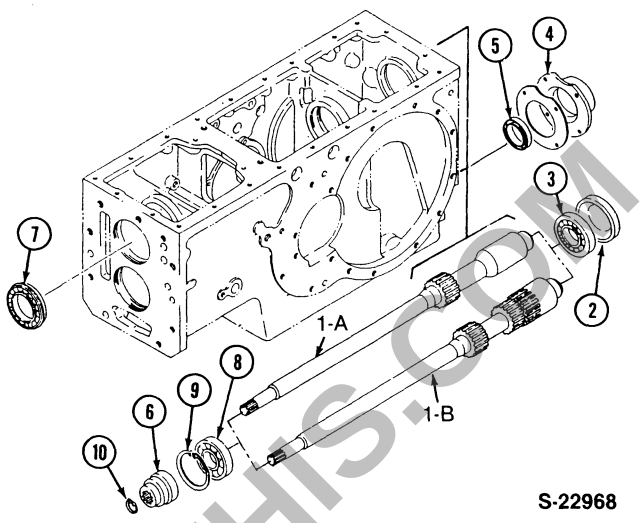

Figure 25
PTO Countershaft Assembly

1-a. PTO Countershaft — one-speed
1-b. PTO Countershaft — two-speed
2. Seal Cover
3. Bearing
4. Seal Retainer
5. Oil Seal
6. Coupling
7. Bearing
8. Bearing
9. Snap Ring
10. Snap Ring

PREVIEW - YOUFIXTHIS.COM

Download full manual at youfixthis.com

FLOW CONTROL VALVE
Reference — Figure 11

Oil flow from the pump enters the lift cylinder via the check ball and the flow control valve needle and seat, Figure 11. When the needle valve is closed or severely restricted, oil pressure opens the check valve and flows to the lift cylinder during the raising cycle. When the needle valve is closed, the one-way check valve prevents oil from returning from the lift cylinder and the lift arms remain at their set height.

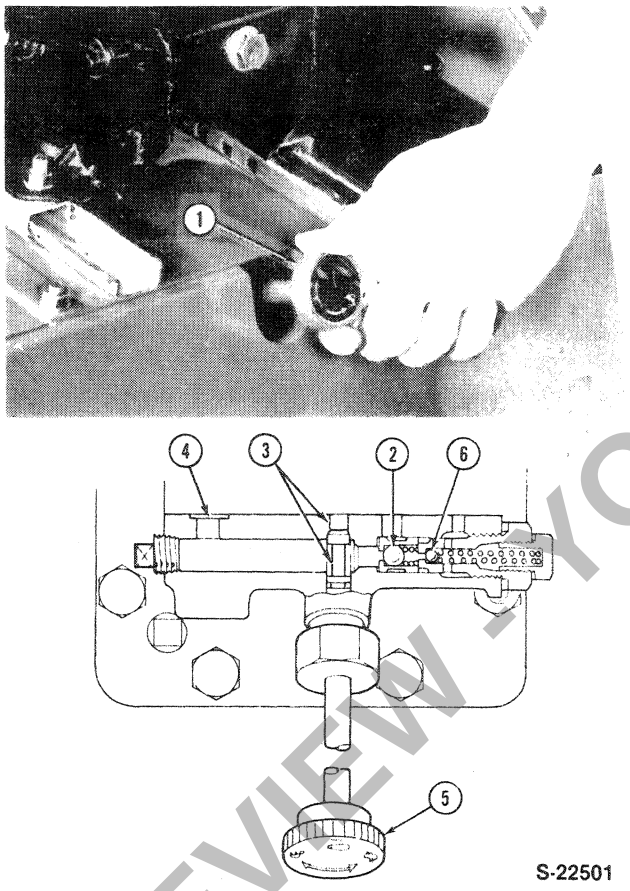

Figure 11
Flow Control Valve Assembly
(Needle Valve Shown in Closed Position)

1. Flow Control Valve Assembly
2. Check Ball
3. Needle and Seat
4. Inlet Passage
5. Needle Valve Control Knob
6. High Pressure Safety Valve

During the lowering cycle, the oil being exhausted from the lift cylinder must return to the reservoir via the needle valve and seat. To obtain the desired rate of drop, adjust the needle valve control knob to achieve the desired effect.

The high pressure safety valve located in the flow control valve body protects the lift cylinder against shock loads. When cylinder pressure exceeds 3625 ± 290 psi (250 ± 20 bars), the safety valve opens and allows the cylinder oil to escape to sump.

LINKAGE OPERATIONS — SINGLE LEVER — POSITION CONTROL MODELS
Reference — Figue 12

The single lever hydraulic system, Figure 12, consists of the single quadrant control lever (1), connected by internal linkage to the control valve spool and, when moved, determine a raise, lower, or neutral condition for the hydraulic system.

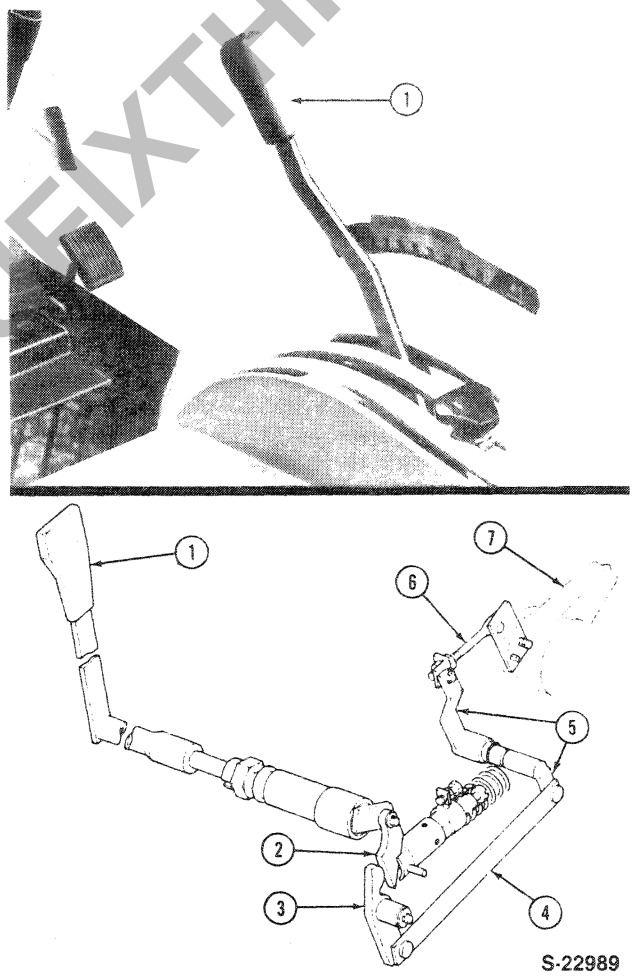

Figure 12
Position Control (Single Lever)
Linkage Operation — Model 1720 Shown

1. Position Control Lever
2. Position Control Lever Cam
3. Feedback Link Cam
4. Feedback Link (Internal)
5. Feedback Link Shaft
6. Feedback Rod
7. Lift Arm

PREVIEW - YOUFIXTHIS.COM

Download full manual at youfixthis.com

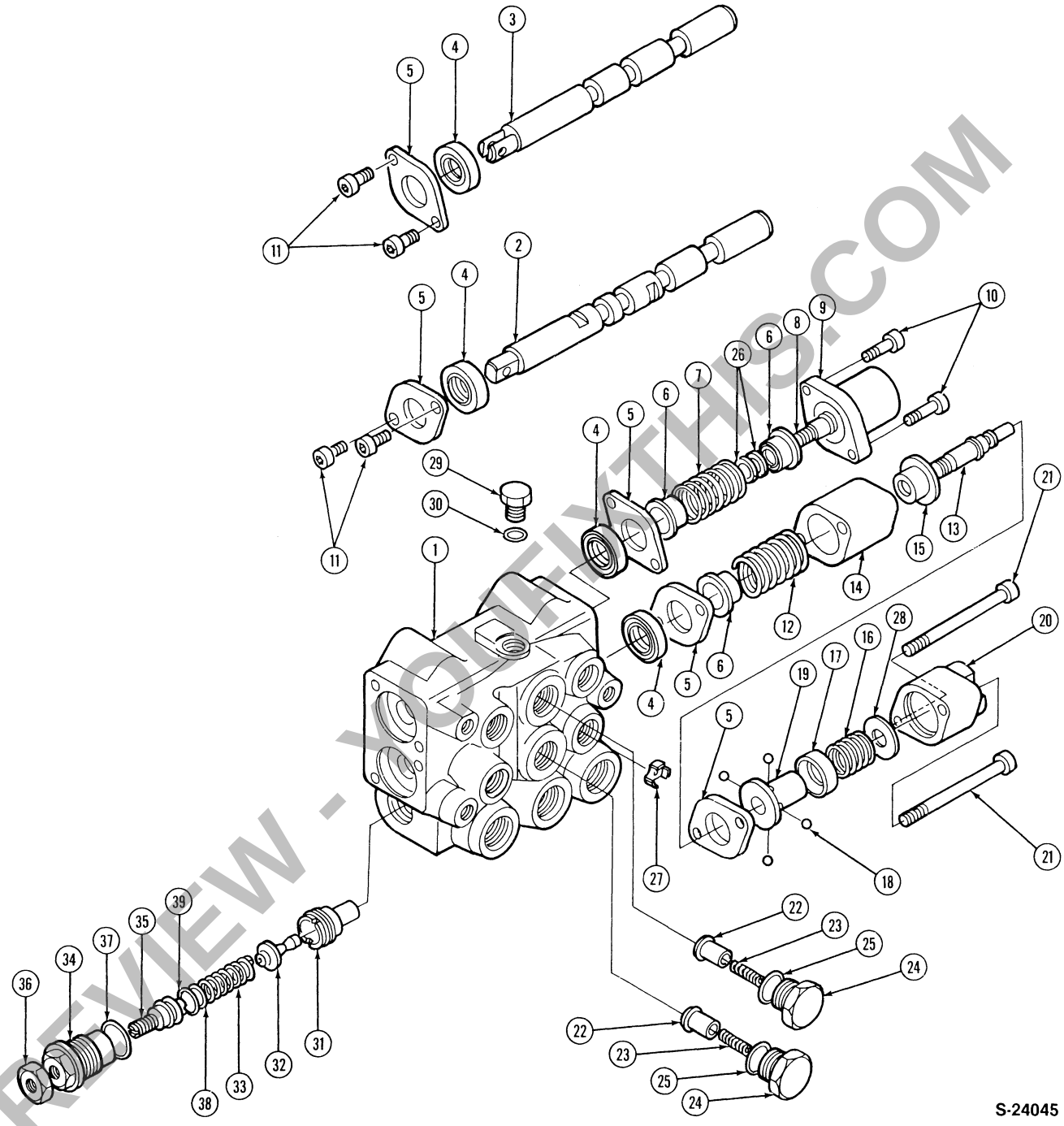

Figure 72
Two Spool Remote Valve Components

1. Housing
2. Spool — Lift Control
3. Spool — Bucket Control
4. Seal — Oil
5. Plate
6. Seat — Spring
7. Spring
8. Bolt
9. Cap
10. Bolt
11. Bolt
12. Spring
13. Bolt
14. Spacer
15. Seat — Spring
16. Spring
17. Bushing
18. Ball
19. Guide
20. Cap Nut
21. Bolt
22. Valve
23. Spring
24. Plug
25. O-Ring
26. Shim
27. Orifice — d = 2.75 mm
28. Shim
29. Plug
30. O-Ring
31. Body
32. Valve
33. Spring
34. Plug
35. Screw
36. Nut
37. O-Ring
38. O-Ring
39. Back-Up Ring

PREVIEW - YOUFIXTHIS.COM

Download full manual at youfixthis.com

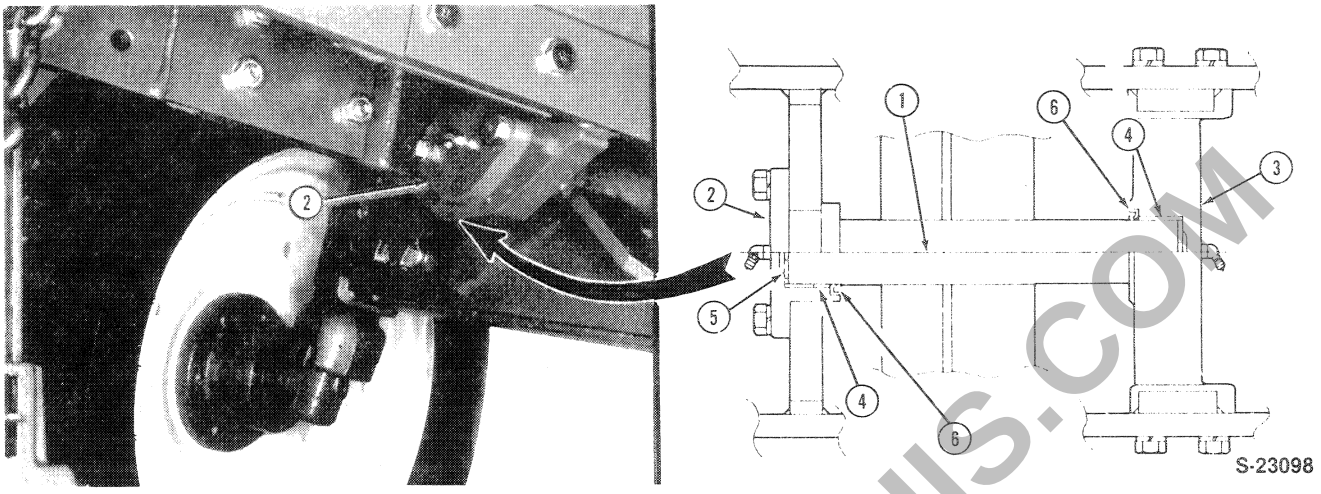

Figure 7
Front Axle Pivot (Model 1720 Shown)

1. Pivot Pin
2. Casing — Front
3. Casing — Rear
4. Bushing
5. Shims
6. Oil Seal

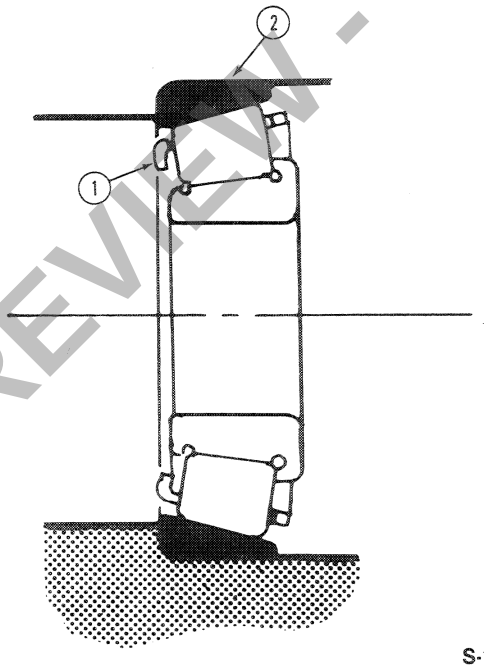

Figure 8
Wheel Hub Taper Bearing Wear Check

1. Taper Bearing
2. Race

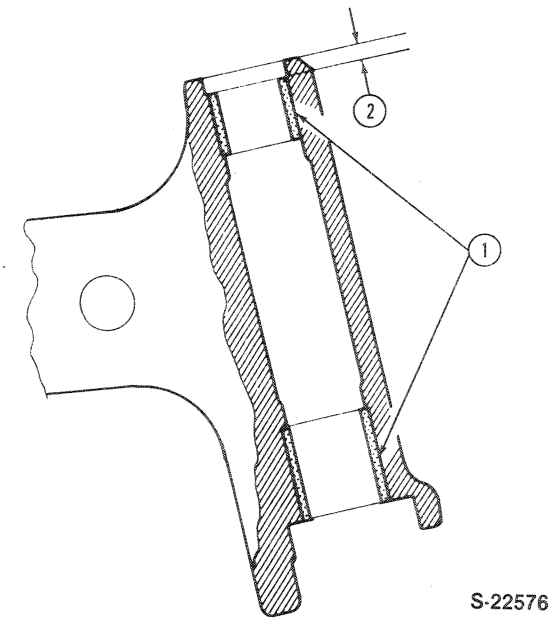

Figure 9
Outer Axle Spindle Bushings

1. Bushings
2. Recess depth — .197 in. (5 mm) 1320/1520 .275 in. (7 mm) 1720

PREVIEW - YOUFIXTHIS.COM
Download full manual at youfixthis.com

FOUR WHEEL DRIVE

1. Place a floor jack and safety stands under the transmission housing to support the front end of the tractor.

2. Remove the boot clamps (2), Figure 3, and slide the rubber boot rearward to obtain access to the front universal joint.

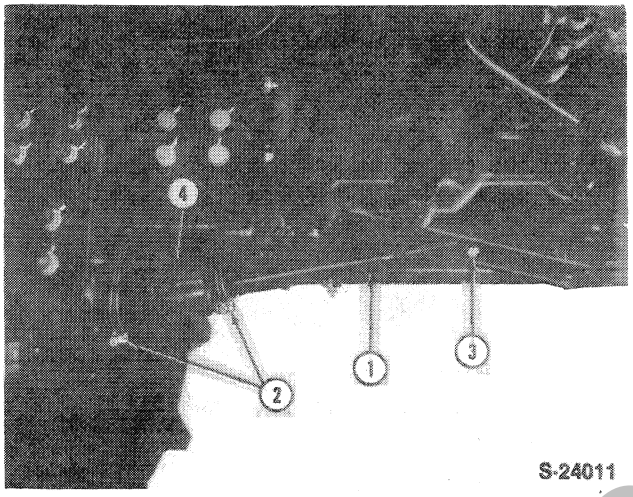

Figure 3
FWD Drive Shaft Removal

1. FWD Drive Shaft
2. Boot Clamps
3. Bolt — Universal Joint
4. Rubber Boot

3. Remove the universal joint retaining bolt from each end of the drive shaft, Figure 3. Disconnect the drive shaft from the transmission end.

4. Remove the drive shaft front universal from the axle drive pinion shaft.

5. Disconnect the power steering cylinder hoses (1) and cap all openings, Figure 4.

6. Remove the front and rear pivot support bolts, Figure 5.

7. Carefully roll the front axle forward out from under the tractor.

B. SEPARATING THE TRACTOR BETWEEN THE FRONT AXLE SUPPORT AND ENGINE

1. Drain the radiator and block coolant and collect in a clean container, Figure 6.

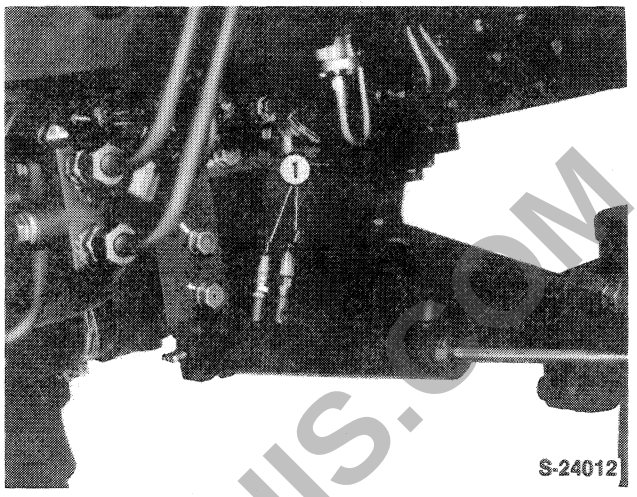

Figure 4
FWD Front Axle Removal

1. Hoses — Power Steering Cylinder

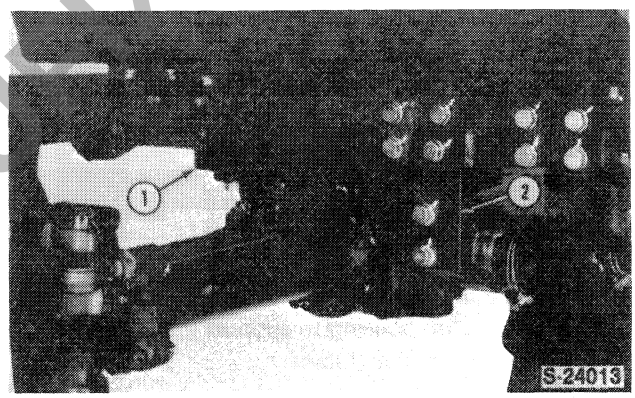

Figure 5
FWD Front Axle Removal

1. Pivot Bearing Support — Front
2. Pivot Bearing Support — Rear

2. Open the hood and remove the side screens and panels, Figure 7.

3. Disconnect the headlamp wiring connectors, Figure 8.

4. Disconnect the battery ground strap.

5. Remove the hood pivot pin cotter pins and remove the hood, Figure 8.

6. Loosen the upper and lower radiator hose clamps and remove the hoses from the radiator.

PREVIEW - YOUFIXTHIS.COM
Download full manual at youfixthis.com

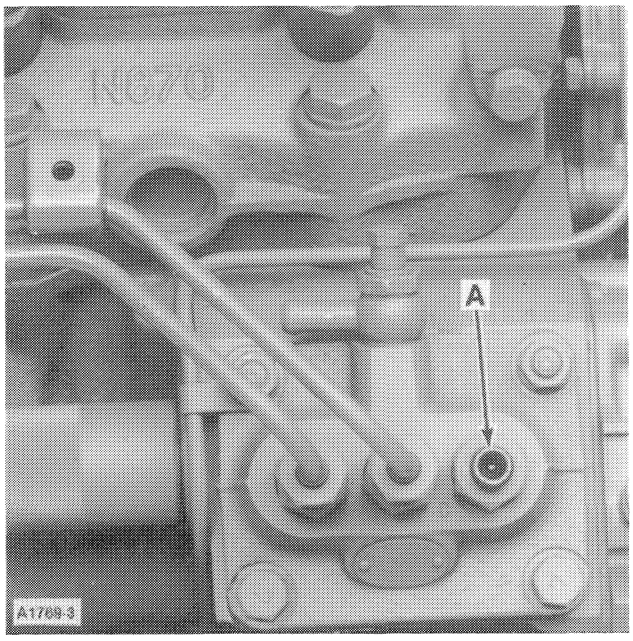

No. 1 Injection Pump Port **Figure 2-8**
A No. 1 Port

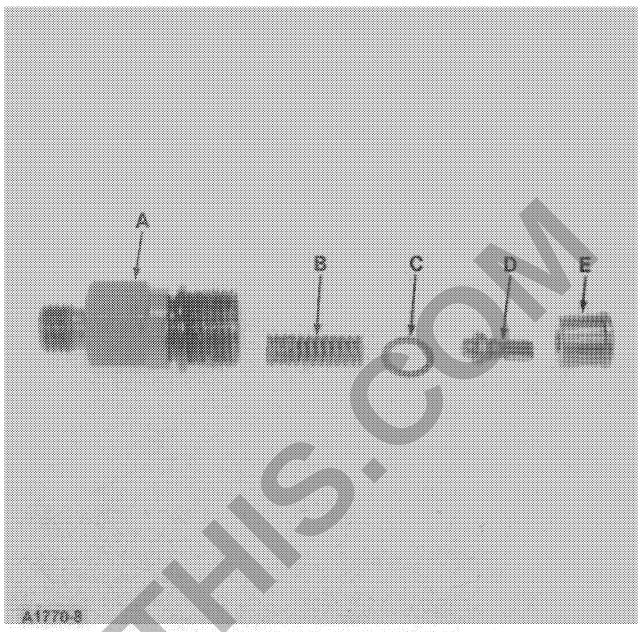

Delivery Valve Parts Identification **Figure 2-10**
A Holder
B Spring
C Washer
D Piston
E Delivery valve seat

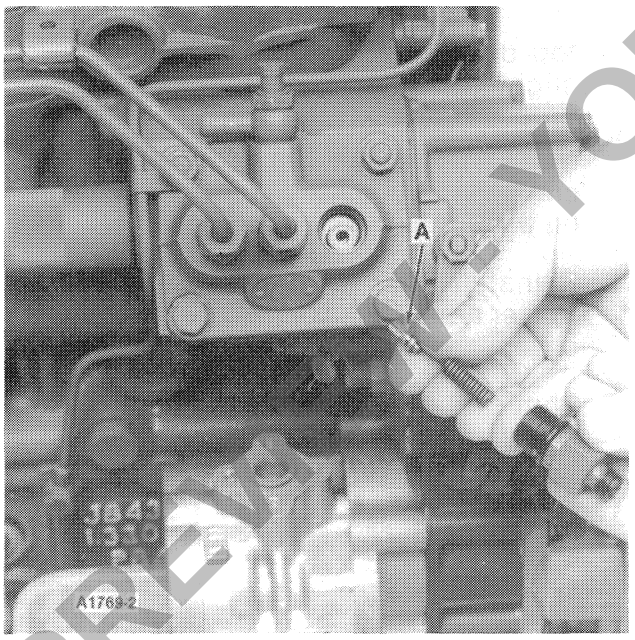

Delivery Valve Piston **Figure 2-9**
A Piston

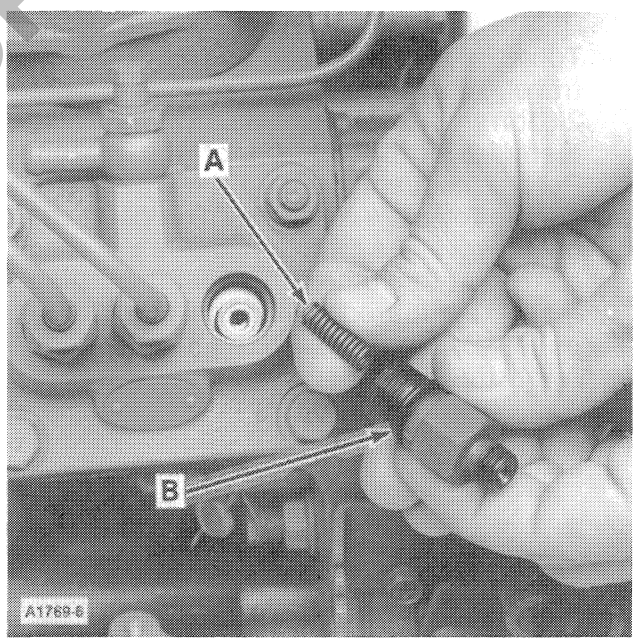

Spring and Holder **Figure 2-11**
A Spring
B Holder

8. Remove the No. 1 injection line, Figure 2-8.
9. Remove the delivery valve piston, A, Figure 2-9, from No. 1 delivery valve.
10. Refer to Figure 2-10 for parts identification.
11. Reinstall the spring, A, Figure 2-11, and holder, B, into the injection pump and tighten the holder securely.

Download full manual at youfixthis.com

CONTENTS

Section 1 — Engine Systems 1-1

Section 2 — Fuel System 2-1

Section 3 — Electrical System 3-1

Section 4 — Clutch System 4-1

Section 5 — Transmission System 5-1

Section 6 — Power Take-Off Systems 6-1

Section 7 — Differential · Rear Axle and Brake Systems 7-1

Section 8 — Hydraulic System 8-1

Section 9 — Steering Systems 9-1

Section 10 — Front Axle and Related Parts 10-1

Section 11 — Wheels and Tires 11-1

Section 12 — Separating the Tractor 12-1

PREVIEW - YOUFIXTHIS.COM

Download full manual at youfixthis.com

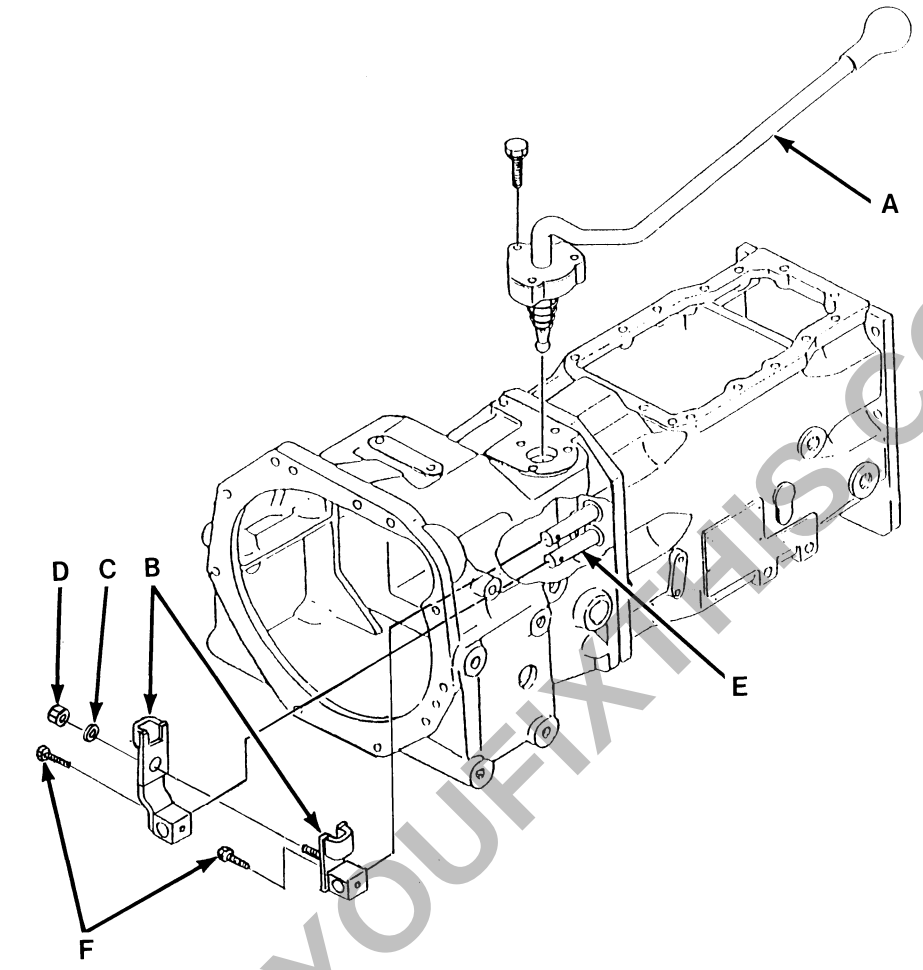

Shift Linkage **Figure 5-5**

A	Shift lever	C	M10 flat washer	E	Shift rods
B	Shift arms	D	M10 locknut	F	Retaining bolt

ADJUSTMENT OF SHIFT ARMS

1. Install shift arms, B, on rods, E. Secure with bolts, F.

2. Install flat washer, C, and locknut, D, on the stud of the shift arm. Tighten locknut, D, until a gap of 0.080″ (2 mm) is obtained between the two shift arms.

PREVIEW - YOUFIXTHIS.COM

Download full manual at youfixthis.com

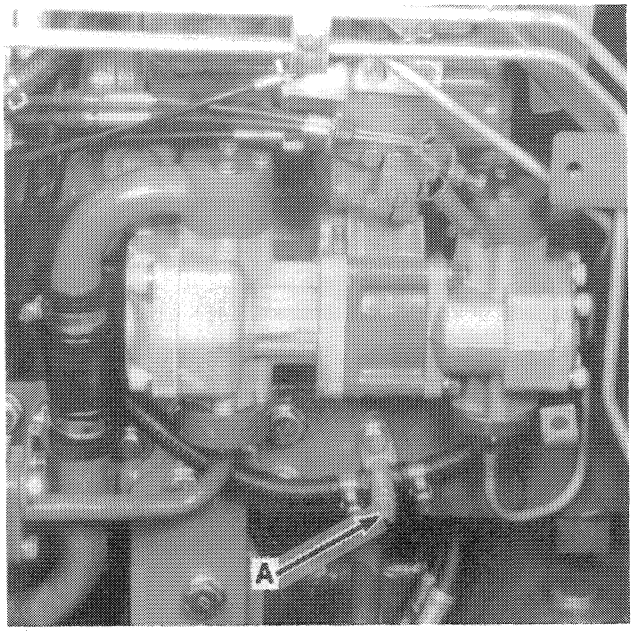

Radiator and Block Drain — FWD **Figure 12-3**
A Drain cock



Engine Side Covers Removal **Figure 12-4**
A Side cover

SEPARATING THE TRACTOR BETWEEN THE FRONT AXLE SUPPORT AND ENGINE

1. Drain the coolant into a clean container, Figure 12-3, (radiator and block).
2. Open the hood and remove the side covers, Figure 12-4.
3. Disconnect the headlamp wiring connectors, Figure 12-5.
4. Disconnect the battery ground strap.
5. Remove the hood pivot pin cotter pins and remove the hood, Figure 12-5.
6. Loosen the upper and lower radiator hose clamps and remove the hoses from the radiator.
7. Remove the radiator upper brace, Figure 12-5.
8. On FWD models, disconnect the power steering tubes, A, from the front axle support and cap all openings.
9. On FWD models, disconnect the FWD drive shaft.
10. Using a floor jack and safety stands under the clutch housing, raise the tractor to support the weight of the front end.

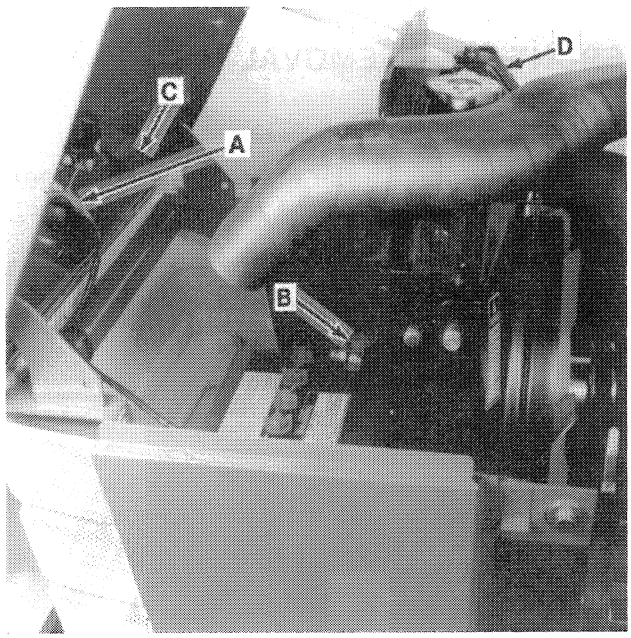

Hood Removal **Figure 12-5**
A Headlamp connectors
B Battery ground strap
C Pivot pins — hood
D Radiator support

PREVIEW - YOUFIXTHIS.COM

Download full manual at youfixthis.com

PREVIEW ONLY

You're viewing 25 of 594 pages

The full manual includes:

- All 594 pages, complete
- Searchable PDF (find any keyword)
- No watermarks
- Instant download
- Print-ready quality

GET FULL MANUAL NOW

Ford 1320, 1520, 1620, 1715, 1720 Service Manual

Scan or click anywhere
youfixthis.com

Click anywhere on this page to get the full manual