LUBRICATION AND MAINTENANCE

This section gives full details of the service procedures necessary to maintain your tractor at peak efficiency while the lubrication and maintenance chart on page 5 provides a ready reference to these requirements. Each operation is numbered for easy reference. Where illustrations are provided, these have the same Figure number as the operation to which they refer.

In addition to the regular service operations listed, the following items should be checked every 10 hours or daily during the first 50 hours of operation:

- Transmission/hydraulics/rear axle oil level
- Wheel nuts for tightness
- Front axle hub oil levels (four wheel drive)

At the first 50 hour service, ensure that the following additional service operations are carried out:

- Check and adjust engine valve clearance
- Check and adjust fan belt tension
- Change hydraulic filter(s) and clean low pressure circuit strainer
- Change front differential oil (four wheel drive)
- Change front axle hub oil (four wheel drive)
- Check torque of front end weight clamp bolts (where fitted)
- Clean, inspect and grease front wheel bearings (two wheel drive)
- Check and adjust brakes

IMPORTANT: *Ensure that the tractor is on level ground and that all rams are extended, where applicable, before checking oil levels.*

To prevent contamination when changing oils, filters, etc., always clean the area around filler, level and drain plugs, dipsticks and filters. Before connecting remote cylinders, ensure that oil contained within them is clean, has not degenerated due to long storage and is of the correct grade.

PREVIEW - YOUFIXTHIS.COM

Download full manual at youfixthis.com

SPECIFICATION

PREVIEW - YOUFIXTHIS.COM

The specifications on the following pages are given for your information and guidance. For further information concerning your tractor or equipment, consult your authorised New Holland dealer.

New Holland policy is one of continuous improvement, and the right to change prices, specification or equipment at any time without notice is reserved.

All data given in this book is subject to production variations. Dimensions and weights are approximate only and the illustrations do not necessarily show tractors in standard condition. For exact information about any particular tractor, please consult your New Holland dealer.

Download full manual at youfixthis.com

A five-position key-start switch is installed, as shown in Figure 4. The key-start switch is used to turn on accessories, to activate the warning lights and instruments and actuate the Thermostart and starting motor.

IMPORTANT: *Never push or tow the tractor to start the engine. Doing so may overstress or damage the drive train.*

NOTE: *A neutral start switch will prevent operation of the starting motor unless the transmission range lever is in the neutral position (N).*

Before starting the engine, always carry out the following procedure:

- Sit in the driver's seat.
- Ensure that the parking brake is firmly applied.
- Push the stop control knob (where fitted) fully in.
- Ensure that both gearshift levers are in neutral and that the P.T.O. lever is in the disengaged position.
- Place the remote control valve levers (where fitted) in the neutral position.
- Ensure that the A.S. C. valve is set to direct oil to the three-point linkage.
- Move the hydraulic lift control lever fully forward.

⚠ **WARNING:** *Check the area beneath the equipment to ensure that no injury or damage will be caused when equipment is lowered.*

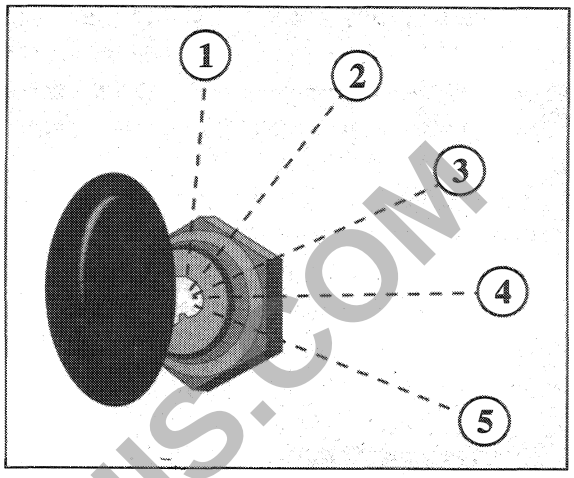

Fig. 4. At Key-start Switch

1. Electrical equipment off
2. Accessories on
3. Warning lights and instruments on
4. Thermostart heater activated
5. Starting motor operates

Starting in warm weather or when the engine is hot

- Open the hand throttle halfway, depress the clutch and turn the key-start switch fully clockwise to position (5) to operate the starting motor. Crank the engine until it starts but do not operate the starting motor for more than 60 seconds. When the engine fires, allow the key to return to position (3).

NOTE: *Once the starting motor has been operated, it is necessary to return the key-start switch back to the 'off' position before the starting motor can be re-activated.*

- Return the throttle to the idle position and check that all warning lights extinguish and gauge readings are normal.

Starting in cold weather - below 4°C (40°F) with a cold engine

- Open the hand throttle fully and turn the keystart switch clockwise to position (4). (In this position, the warning lights on the instrument panel will go out). Hold for 30 seconds, then turn the key fully clockwise to position (5) to

PREVIEW - YOUFIXTHIS.COM

Download full manual at youfixthis.com

De Luxe Seat - Figure 1

The suspension is adjusted by means of a knob (1) on the back of the seat frame. Turn the knob clockwise to increase suspension stiffness and provide a firmer ride. Turn the knob anti-clockwise and the seat suspension will become softer. The optimum suspension setting is achieved when the indicator (2) registers your approximate weight, when seated.

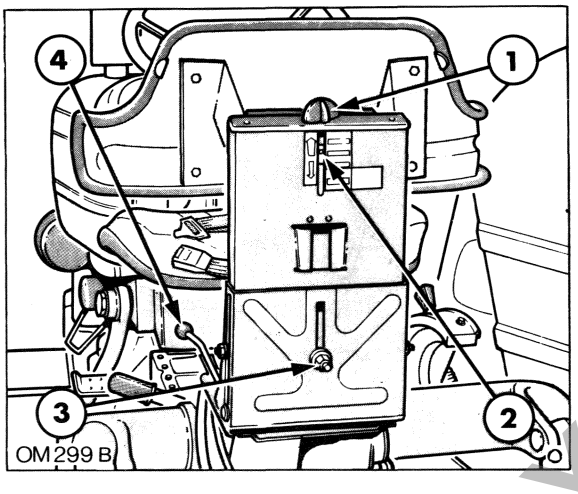

Fig. 1. De Luxe Seat (where fitted)

1. Suspension adjuster
2. Weight indicator
3. Ride height adjuster
4. Travel adjustment lever

To adjust seat height, loosen the nut (3) and raise or lower the seat, as required. Tighten the nut.

The lever (4) controls seat travel. Lift the lever and slide the seat forward or backward, as required. When the lever is released, the seat will lock in the position selected.

Further travel is possible after loosening the two bolts securing the seat frame to the hydraulic top cover.

Seat Belt (where fitted)

WARNING: *In some countries, tractors equipped with a safety frame or rollbar (ROPS) are also fitted with a seat belt. Always use the seat belt with a safety frame or rollbar installed. Do not use a seat belt if the tractor is not equipped with a safety frame or rollbar, or with folded rop's in lowered position.*

The seat belt is of the static type. To fasten the belt, pull the belt from the reel, insert the tongue into the buckle until a 'click' indicates it is properly engaged. Press the red button on the buckle to release the belt.

To lengthen the belt, lift up the buckle and pull to your left. To tighten, pull on the free end of the belt.

The belt [illegible] with clean, soapy water. Do not use solvents, bleach or dye on the belt as these chemicals will weaken the webbing. Replace the belt when it shows signs of fraying, damage or general wear.

INSTRUMENT PANEL-GAUGES AND WARNING LIGHTS

General

The instrument panel, Figure 2, comprises of three gauges and four coloured lights which provide operating information or give warning of system malfunction.

The instruments are illuminated when the tractor lights are turned on.

Proofmeter

The proofmeter (1) consists of a tachometer and hour meter. The tachometer indicates engine revolutions per minute. Each division on the scale represents 100 rev/min., therefore with the needle indicating '20' the engine is running at 2000 rev/min.

PREVIEW - YOUFIXTHIS.COM

Download full manual at youfixthis.com

Hours Operated		Service Requirements	Check	Clean	Lube	Change	Adjust	Drain	Wash
Every 10 hours or daily		Engine oil level	X				X		
		Radiator and oil cooler (where fitted)	X	X					
		Radiator coolant level	X				X		
		Pre-Filter		X					
		Hydrostatic steering oil level	X				X		
When warning light glows		Dry air cleaner (where fitted)		X					
Every 50 hours		Clutch pedal free play	X				X		
		Fuel filter/sediment separator						X	
		Wheels and tires	X				X		
		Belt pulley oil level (where fitted)	X				X		
		Transmission/hydraulics rear axle oil level	X				X		
		Four wheel drive oil levels	X				X		
		All grease fittings			X				
	*	Battery (tractors operating in tropical climates only)	X						
Every 300 hours		Battery (tractors operating in temperate climates only)	X						
	**	Engine oil and filter				X			
		Hydraulic oil filter				X			
		Brakes	X				X		
		Safety frame bolts	X				X		
		Fan/alternator belt	X				X		
		Dry air cleaner outer element					•		X
Every 600 hours		Dry air cleaner outer element				X			
	#	Starter motor pinion	X	X	X				
		Hydrostatic steering oil and filter					X		
		Front wheel bearings (two wheel drive)	X	X	X		X		
		Valve tappet clearance	X				X		
		Rocker cover ventilation filter				X			
		Fuel filter/sediment separator		X		X			
Every 1200 hours or annually		Fuel injectors	X	X			X		
		Transmission/rear axle oil				X			
		Four wheel drive oils				X			
		Dry air cleaner inner element				X			
Every 1200 hours or two years		Engine coolant				X			
As required		General Maintenance							

* Tractors operating in tropical climates only. Batteries on tractors operating in temperate climates need only be checked every 300 hours. See operation 33.

** Oil change interval will be reduced if the diesel fuel has a high sulphur content, if rape seed fuel is used or if the tractor is operated in extremely cold temperatures. See page 16 of this section.

\# Frequency depends upon clutch useage. See operation 43.

PREVIEW - YOUFIXTHIS.COM

Download full manual at youfixthis.com

GENERAL DIMENSIONS (two wheel drive)		5610S	6610S	7610S	7810S
Height to top of roll bar (2-post ROPS)	in	95.7	95.7	95.7	97.9
	mm	2432	2432	2432	2478
Height to top of 4-post safety frame	in	95.7	95.7	95.7	97.9
	mm	2432	2432	2432	2478
Height to top of exhaust	in	108.0	108.0	108.0	110.0
	mm	2742	2742	2742	2793
Height to top of hood	in	61.7	61.7	61.7	62.7
	mm	1568	1568	1568	1592
Crop clearance under front axle	in	19.0	19.0	19.0	20.0
	mm	483	483	483	507
Crop clearance under rear axle	in	15.3	15.3	15.3	17.4
	mm	388	388	388	443
Minimum ground clearance (under drawbar)	in	14.8	14.8	14.8	17.0
	mm	376	376	376	431
Minimum width (at minimum track)	in	69.6	69.6	69.6	69.6
	mm	1767	1767	1767	1767
Maximum width (at maximum track)	in	93.6	93.6	93.6	93.6
	mm	2377	2377	2377	2377
Overall length (to end of lower links)	in	147.0	147.0	147.0	158.3
	mm	3734	3734	3734	4020
Wheelbase	in	87.7	88.7	88.7	99.1
	mm	2253	2253	2253	2516
Minimum turning radius	in	142	142	142	174*
	mm	3590	3590	3590	4410*

*Without brakes

The above dimensions are based on standard tractors with tires as shown:	Front	----------	7.50 – 16	----------	10.00 – 16
	Rear	----------	13.6 – 38	----------	16.9 – 38

NOTE: *If your tractor has tires of a different size then the above dimensions will vary due to the difference in the rolling radius and section width of the tires fitted.*

PREVIEW - YOUFIXTHIS.COM

Download full manual at youfixthis.com

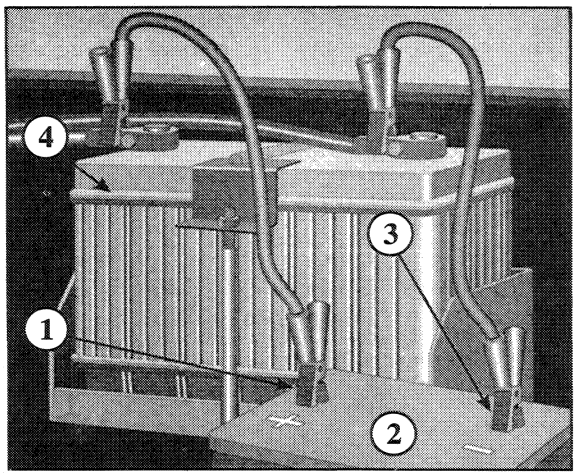

Fig. 8. Connecting Up an Auxiliary Battery

1. Positive jump lead (red)
2. Auxiliary battery
3. Negative jump lead (black)
4. Tractor battery (low-mounted type illustrated)

STARTING THE TRACTOR WITH JUMP LEADS (booster cables)

WARNING: *Operate the starting motor only from the driver's seat. If the key—start switch is by-passed, the engine may start inadvertently with a gear selected and cause sudden and unexpected movement of the tractor or a tractor runaway. Wear eye protection when starting the tractor with jump leads or when charging the battery.*

If it is necessary to use jump leads (booster cables) to start the tractor, use only heavy duty leads. Refer to Figure 8 and proceed as follows:

- Connect one end of the red jump lead to the tractor battery positive (+) terminal and the other end to the auxiliary battery positive (+) terminal.
- Connect one end of the black jump lead to the tractor battery negative (-) terminal and the other end to the auxiliary battery negative (-) terminal. Follow the starting procedure previously described.
- When the engine starts allow it to run at idle speed, turn on all electrical equipment (lights, etc.) then disconnect the jump leads in the reverse order to the connecting procedure. This will help protect the altemator from possible damage due to extreme load changes.

NOTE: *When using an auxiliary battery to start the engine, ensure that the polarity of the jump leads is correct -* ***positive to positive, negative to negative****, otherwise the alternator may be damaged.*

Your tractor has electrical shut-off. The action of turning the key-start switch off will automatically cut off the supply of fuel to the injectors.

- Turn the key-start switch off.
- Place the remote control valve levers (where fitted) in the neutral position.
- Move the hydraulic lift control lever fully forward to lower all hydraulic equipment to the ground.

WARNING: *Check the area beneath the equipment to ensure that no injury or darnage will be caused when equipment is lowered.*

PREVIEW YOUFIXTHIS.COM

Download full manual at youfixthis.com

A P.T.O. symbol on the tachometer scale indicates the engine speed at which the standard P.T.O. speed of 540 rev/min is obtained.

The proofmeter also records the total number of hours that the tractor has operated. The hours recorded should be used as a guide to determine hourly servicing intervals. (See Section B of this - Manual).

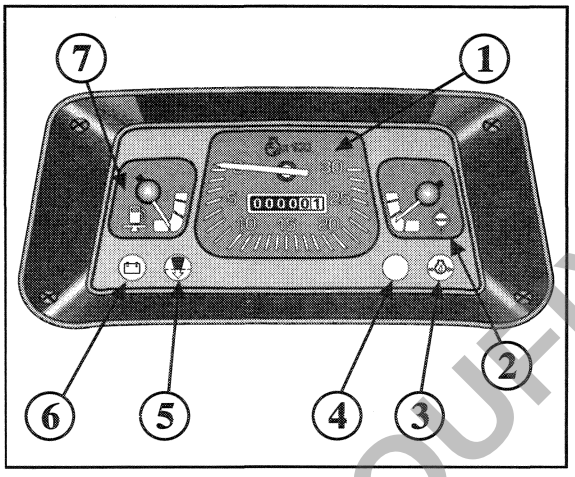

Fig. 2. Instrument Panel.

1. Proofmeter
2. Engine coolant temperature gauge
3. Engine oil pressure warning light
4. Not used
5. Dry air cleaner restriction warning light
6. Alternator warning light
7. Fuel gauge

Engine Coolant Temperature Gauge

The gauge (2) indicates the temperature of the engine coolant. If the needle enters the red section of the gauge while the engine is running, stop the engine and investigate the cause.

NOTE: *When the key-start switch is turned off, the gauge needle will assume a random position.*

Engine Oil Pressure Warning Light

The light (3) indicates low engine oil pressure. If the light comes on while the engine is running, stop the engine and investigate the cause.

Dry Air Cleaner Warning Light

The light (5) indicates that the air cleaner is blocked or partially blocked. If the light comes on while the engine is running, stop the tractor and service the air cleaner to prevent damage to the engine. See Section B for servicing requirements.

Alternator Warning Light

The light (6) indicates that the alternator is not charging. The light should extinguish when the engine speed is increased above idle.

Fuel Gauge

The gauge (7) indicates the level of fuel in the tank and is only operative with the key-start switch turned on.

NOTE: *When the key-start switch is turned off, the gauge needle will assume a random position and may well indicate a fuel level in excess of the true level. Always check the fuel level with the key-start switch turned on.*

HAND CONSTROLS AND SWITCHES

Hand Throttle Lever

Pull the lever (1) Figure 3, rearwards to progressively increase engine speed.

Four Wheel Drive Switch (where fitted)

Press the green section of the switch (2) to engage the drive to the front wheels. Press the black section of the switch to revert to rear wheel drive only.

When the key-start switch is turned on, the rocker switch will be internally illuminated. When four wheel drive is engaged the switch is brightly lit. The light intensity is reduced when four wheel drive is disengaged. See **FOUR WHEEL DRIVE** for correct operating procedure.

PREVIEW - YOUFIXTHIS.COM

Download full manual at youfixthis.com

EVERY 10 HOURS OR DAILY (whichever occurs first) carry out the following checks:

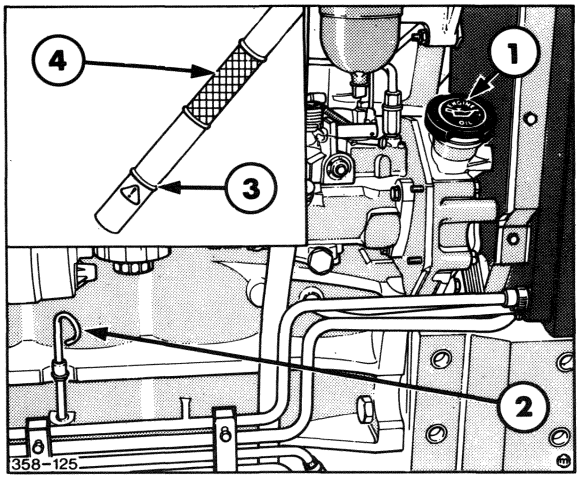

Fig. 5. Engine - Right-hand Side

1. Engine filler plug
2. Engine dipstick
3. Low or danger level
4. Hatched area = satisfactory fill level

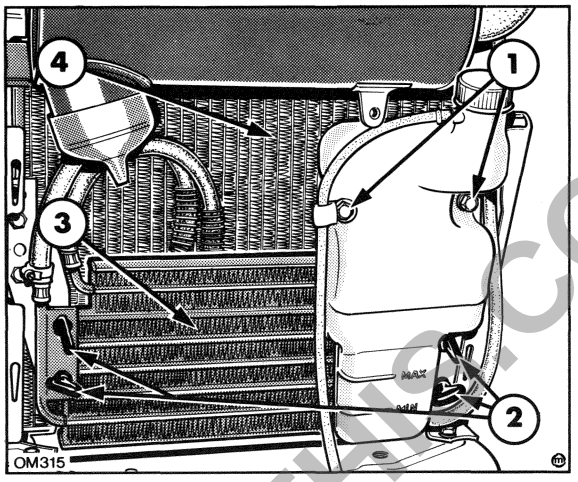

Fig. 6. Radiator and Oil Cooler

1. Retaining screws (coolant recovery bottle)
2. Retaining thumbscrews (oil cooler)
3. Engine oil cooler
4. Engine coolant radiator

CHECKING ENGINE OIL LEVEL

See Figure 5

Before checking the oil level, stop the engine and wait for a short period to allow the oil to drain back into the sump.

Check the oil level by means of the dipstick. If necessary, remove the filler plug and top up with fresh oil so the level is within the hatched area on the dipstick. The quantity of oil represented by the upper and lower lines of the hatched area is approximately 3.0 Imp. pints 3.6 U.S. pints (1.8 litres) in 4 cylinder models.

Do not fill above the upper line of the hatched area. Excessive oil will be burned off within a short time and give a false impression of oil consumption.

Oil Specification: WSE-M2C906-A (preferred) or ESN-M2C121-B, C, D

RADIATOR AND OIL COOLER

See Figure 6

For improved access, the oil cooler may be removed from the operating position after removal of the four retaining thumbscrews. Remove and support the coolant recovery bottle, if necessary.

Clean the radiator and oil cooler matrix with com pressed air not exceeding 100 PSI (7 bar). Fins blocked with oily substances may be cleaned with a detergent solution, preferably applied with a high pressure washer.

ENGINE COOLANT RECOVERY SYSTEM

Peak power operation, followed by a rapid reduction in power requirement and engine speed, may cause the coolant to boil and be expelled from the radiator overflow tube. Normally, this loss of coolant is small and of little consequence, but repeated occurrence can significantly lower the coolant level and necessitate topping up.

PREVIEW - YOUFIXTHIS.COM
Download full manual at youfixthis.com

GENERAL DIMENSIONS (four wheel drive)		5610S	6610S	7610S	7810S
Height to top of roll bar (2-post ROPS)	in	95.7	95.7	95.7	97.9
	mm	2432	2432	2432	2478
Height to top of 4-post safety frame	in	95.7	95.7	95.7	97.9
	mm	2432	2432	2432	2478
Height to top of exhaust	in	114.2	114.2	114.2	116.7
	mm	2900	2900	2900	2965
Height to top of hood	in	67.9	67.9	67.9	69.6
	mm	1725	1725	1725	1767
Crop clearance under front axle	in	19.0	19.0	19.0	21.9
	mm	483	483	483	557
Crop clearance under rear axle	in	15.3	15.3	15.3	18.4
	mm	388	388	388	468
Minimum ground clearance (under drawbar)	in	14.8	14.8	14.8	18.0
	mm	376	376	376	456
Minimum width (at minimum track)	in	69.6	69.6	69.6	69.6
	mm	1767	1767	1767	1767
Maximum width (at maximum track)	in	93.6	93.6	93.6	93.6
	mm	2377	2377	2377	2377
Overall length (to end of lower links)	in	147.0	147.0	147.0	158.3
	mm	3734	3734	3734	4020
Wheelbase	in	87.5	87.5	87.5	99.2
	mm	2223	2223	2223	2520
Minimum turning radius	in	162	162	162	185*
	mm	4115	4115	4115	4700*

*Without brakes

The above dimensions are based on standard tractors with tires as shown:	Front	----------	12.4 – 24	----------	14.9 – 24
	Rear	----------	13.6 – 38	----------	16.9 – 38

NOTE: *If your tractor has tires of a different size then the above dimensions will vary due to the difference in the rolling radius and section width of the tires fitted.*

PREVIEW - YOUFIXTHIS.COM

Download full manual at youfixthis.com

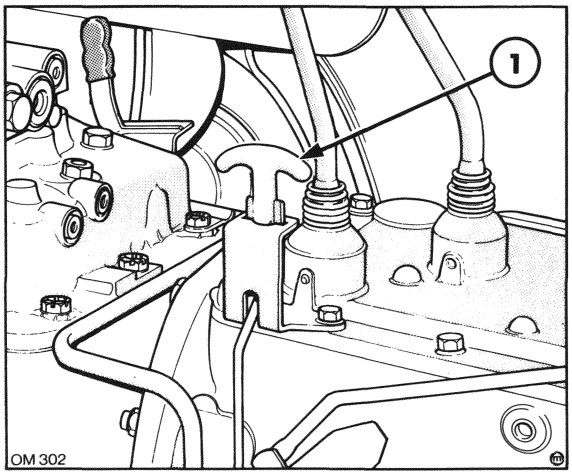

Fig. 9. Parking Brake

1. Parking brake latch

PARKING BRAKE AND FOOT CONTROLS

Parking Brake

The standard parking brake is a latch in the form of a T-handle, Figure 9, which is used to secure the footbrakes in the applied position.

To operate the latch, lock the footbrakes together, pull up the latch and rotate one quarter turn. Apply the footbrakes which will lock in the applied position.

To free the parking brake, rotate the latch one quarter turn and release. Momentarily depress the footbrakes to disengage the ratchet.

IMPORTANT: *Ensure that the parking brake is fully released before driving off.*

Footbrakes

The left and right footbrakes (1) Figure 10, may be operated independently, to aid turning in confined spaces or together for normal stopping. When operating in the field, the brake pedals may be unlocked. However, due to the close proximity of the pedals to one another, it is still possible to apply both brakes together, when required.

WARNING: *For your safety, always lock the brake pedals together when travelling at transport speeds or if a trailer is attached to the tractor. To lock the pedals together, slide the bolt (4) across to engage the hole in the underside of the right-hand pedal.*

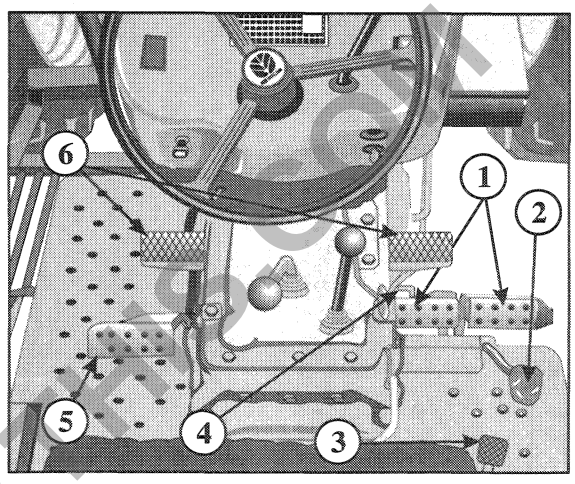

Fig. 10. Foot Controls

1. Brake pedals
2. Foot throttle
3. Differential lock pedal
4. Locking bolt
5. Clutch pedal

Foot Throttle

The foot throttle (2) may be used independently of the hand throttle to control the speed of the tractor. it is recommended that you use the foot throttle when driving on the highway.

IMPORTANT: *When it is required to use the foot throttle, set the hand throttle to the idle position (fully forward).*

Differential Lock

In field conditions inducing wheel slip, hold down the differential lock pedal (3) with your foot until the lock is felt to engage. The lock will automatically disengage when traction at the rear wheels equalises.

If conditions cause a wheel to spin at speed, reduce the engine speed to idle before engaging the differential lock.

WARNING: *Never use the differential lock at speeds above 5 MPH (8km/h) or when turning the tractor. When engaged, the differential lock will prevent the tractor from turning.*

PREVIEW - YOUFIXTHIS.COM
Download full manual at youfixthis.com

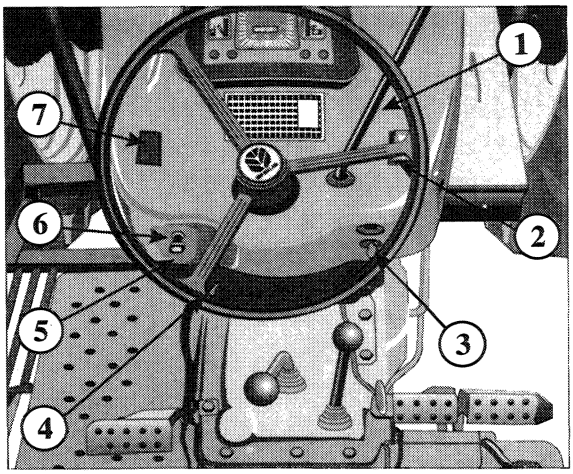

Fig. 3. Hand Controls and Switches

1. Hand throttle lever
2. Four wheel drive switch (where fitted)
3. Key-start switch & engine stop control
4. Hazard warning lights switch (where fitted)
5. Horn push (where fitted)
6. Tractor lights switch
7. Dual Power switch (where fitted)

Key-Start Switch

The key-start switch (3) activates the Thermostart cold start device and the starting motor. See the following text entitled **STARTING THE ENGINE.**

Hazard Warning Lights Switch (where fitted)

For Mexico and North America, the hazard warning lights (4-way flasher) are operated by means of a toggle switch (4) beneath the instrument panel.

Horn Push (where fitted)

Press the knob (5) to sound the horn. The horn will only operate with the key-start switch turned on.

Tractor Lights Switch

Turn the switch (6) clockwise to operate the tractor lights. The switch has three or four positions:

Tractors without dipping headlights:

1. Lights off.
2- Instrument and rear lights on.
3. Instrument, rear and headlights on.

Turn Signal Switch

The stalk type switch (8) operates the turn signals,

NOTE: *The turn signals will only operate with the key-start switch turned on.*

Dual Power switch (where fitted)

Press the amber section of the switch (7) (tortoise symbol) to engage the Dual Power. Press the green section of the switch (hare symbol) to revert to direct drive.

See **DUAL POWER TRANSMISSION** for correct operating procedure.

Work Lamp

The switch for the work lamp is on the back of the lamp body.

NOTE: *The work lamp is only operative with the tractor lights switched on.*

STARTING THE ENGINE

WARNING: *Your tractor is equipped with the Thermostart cold weather starting aid. Do not use ether with Thermostart installed. If, in an emergency, it is necessary to use ether, disconnect the Thermostart terminal wire from the heater plug on the front of the intake manifold and insulate the free end of the wire.*

The Thermostart, which is effective in ambient temperatures down to -18°C (0°F), consists of a heating element installed in the inlet manifold. When operated by the key-start switch, the Thermostart will ignite fuel in the manifold, heating indrawn air Prior to it being drawn into the combustion chamber.

If temperatures below -18°C (0°F) are encountered, a coolant immersion heater is available as an accessory. The coolant immersion heater is effective in ambient temperatures down to -29°C (-20°F) when used in conjunction with Thermostart.

PREVIEW - YOUFIXTHIS.COM

Download full manual at youfixthis.com

PREVIEW ONLY

You're viewing 12 of 122 pages

The full manual includes:

- All 122 pages, complete
- Searchable PDF (find any keyword)
- No watermarks
- Instant download
- Print-ready quality

GET FULL MANUAL NOW

New Holland 5610S, 6610S, 7610S, 7810S Operator Manual

Scan or click anywhere
youfixthis.com

Click anywhere on this page to get the full manual