SERVICE MANUAL

9050L / 9070L / 9070M

Grape Harvester

PREVIEW - YOUFIXTHIS.COM

Part number 51697921
English
November 2019

NEW HOLLAND AGRICULTURE

© 2019 CNH Industrial France S.A.S. All Rights Reserved.

Engine identification

Each engine has an ID tag that identifies its engine type and serial number. This tag is located on the top of the engine. On 9090X models, this plate is located on the lower cover of the engine, it is in sticker form.

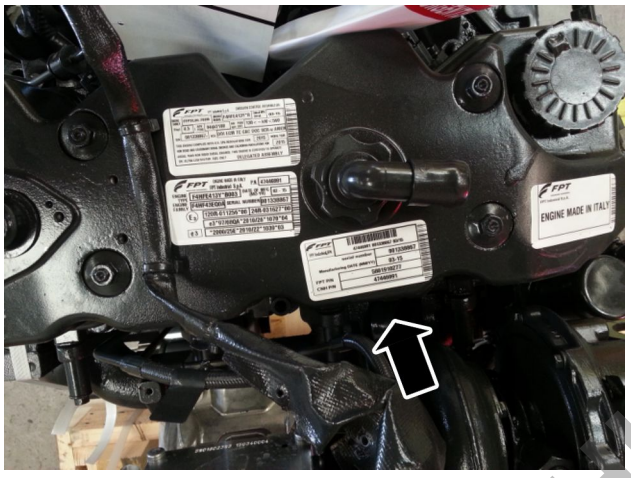

COIL15GR01353QA 4

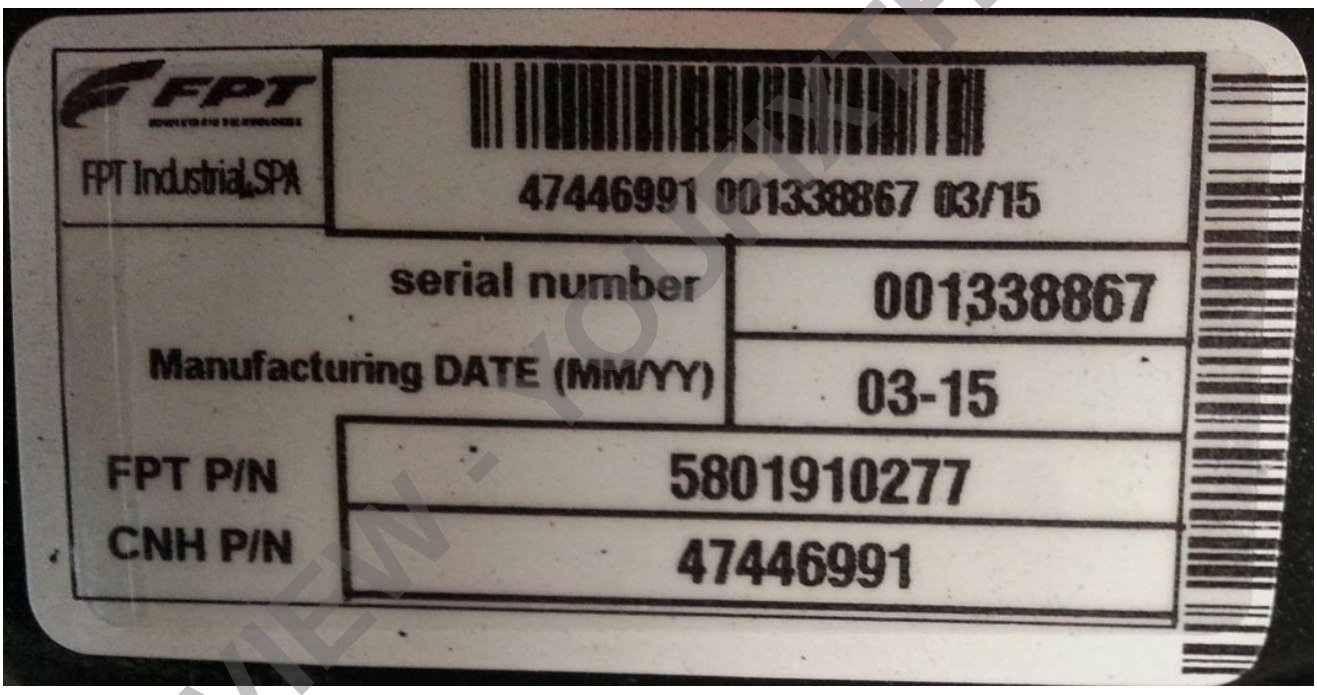

COIL15GR01766TA 5

Serial number on destemmer/Opti-grape™ options

Destemmers and **Opti-grape™** have a different serial number to the machine. The ID tag can be found on the flap of the destemmer box.

FAMILY	CODE LETTER	SERIAL NUMBER	MANUFACTURING ORDER
690 (9000ML T3 destemmer) 691 (9000ML T3 **Opti-grape™**) 710 (7030M destemmer) 711 (7030M **Opti-grape™**) 730 (8030L destemmer) 740 (9000ML T4 destemmer) 741 (9000ML T4 **Opti-grape™**) 780 (9000N destemmer)	T	XXX	XXX

Download full manual at youfixthis.com
PREVIEW - YOUFIXTHIS.COM

Engine and crankcase - Overview - GENERAL COMBUSTION ENGINE

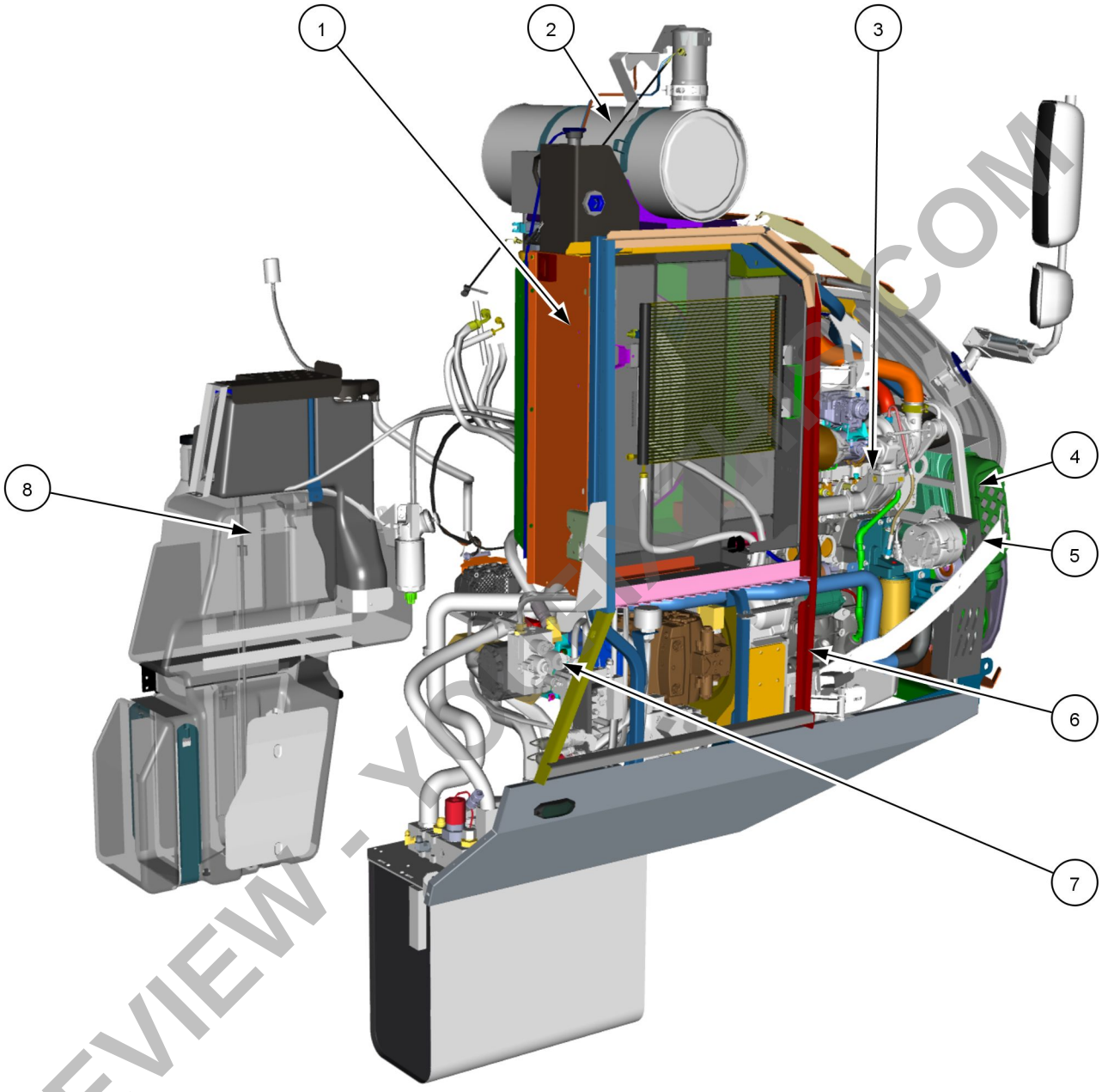

COIL17GR00851UA 1

1	Cooling system	**Radiator - Detailed view - Engine cooling (10.400)**
2	Exhaust gas after treatment - SCR	**Selective Catalytic Reduction (SCR) exhaust treatment - Detailed view (10.500)**
3	Engine – General specifications	**Engine and crankcase - Detailed view - Engine general information (10.001)**
4	Air cleaner	**Engine and crankcase - Detailed view - Air filter (10.001)**
5	Servo belt	**Engine and crankcase - Detailed view - Servo belt (10.001)**
6	Engine mount	**Engine and crankcase - Detailed view of the engine frame - 9000 M & L (10.001)**
7	Pumps	**Engine and crankcase - Detailed view - Pumps (10.001)**
8	Fuel system	**Fuel tanks - Detailed view - Fuel System (10.216)**
9	Flector	**Engine and crankcase - Detailed view - The flex disc (10.001)**

Download full manual at youfixthis.com

Pump - General specification - Pump openings

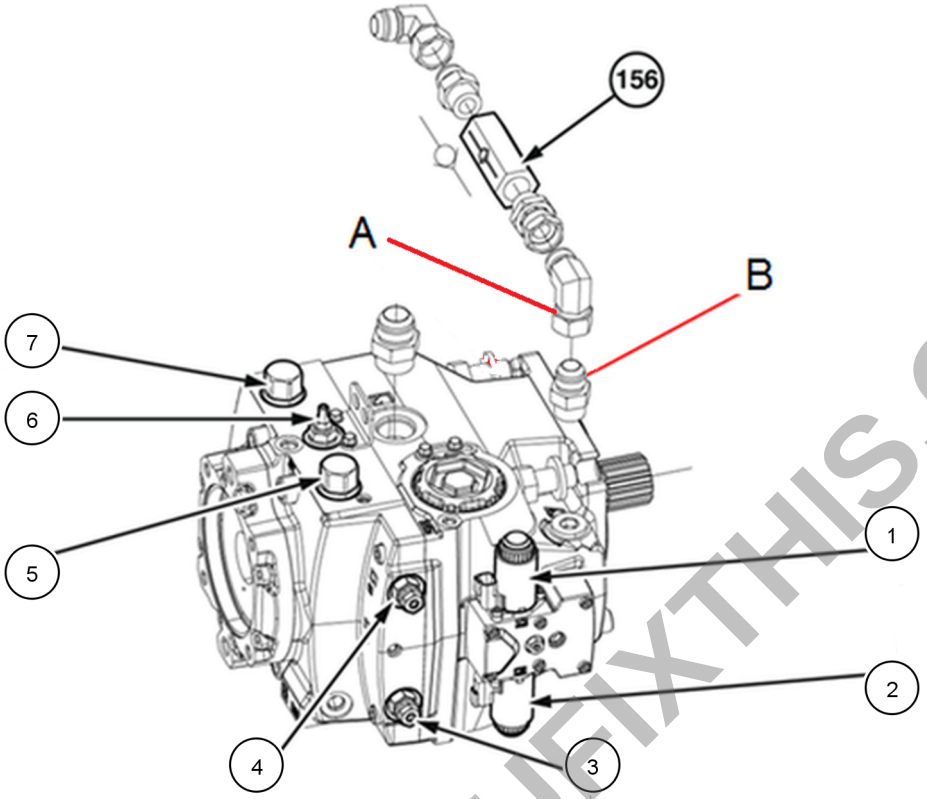

COIL15GR01790TA 1

(1). Y–004. Forward travel control solenoid

(2); Y–005. Reverse travel control solenoid

(3). Reverse travel displacement counterbalance limiter (tightening torque of **52 N·m** (**38.4 lb ft**)

(4). Forward travel displacement counterbalance limiter (tightening torque of **52 N·m** (**38.4 lb ft**)

(5). Reverse travel HP limiter (not adjustable), multifunction valve with tightening torque of **11 N·m** (**8.1 lb ft**)

(6). Boost pressure limiter (tightening torque of **52 N·m** (**38.4 lb ft**)

(7). Forward travel HP limiter (not adjustable), multifunction valve with tightening torque of **11 N·m** (**8.1 lb ft**)

(156). Non-return valve calibrated to **3.0 bar** (**43.5 psi**)

(A). Connection to be loosened to drain the pump before start-up

(B). The tightening torque must be **200 N·m** (**147.5 lb ft**)

PREVIEW - YOUFIXTHIS.COM

Download full manual at youfixthis.com

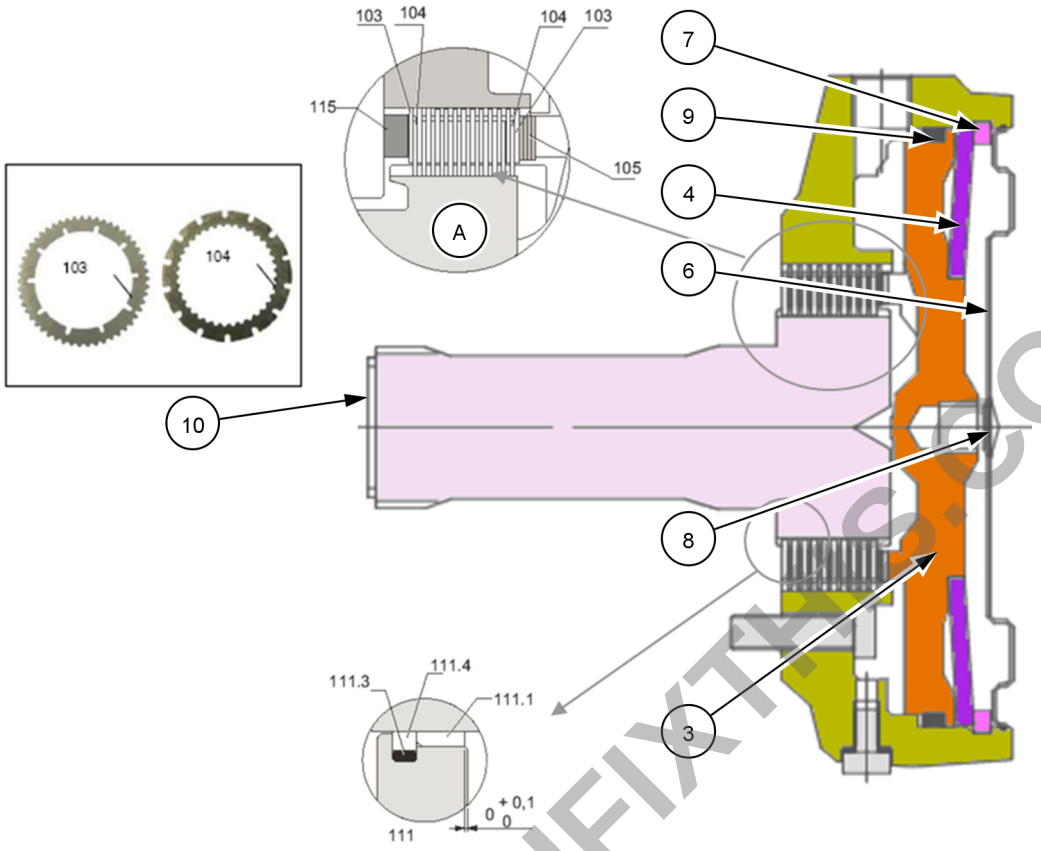

(A). Steel discs without wear rate, with nominal travel of **1.4 mm** (**0.1 in**):
32 inner discs
33 outer discs

(1). Cap for bleeding the crankcase (fill the crankcase before running the engine)
(3). Brake piston
(4). Spring washer
(6). Cover, shield
(7). Circlip
(8). Plastic cap
(9). O–ring
(10). Hub

PREVIEW - YOUFIXTHIS.COM

Download full manual at youfixthis.com

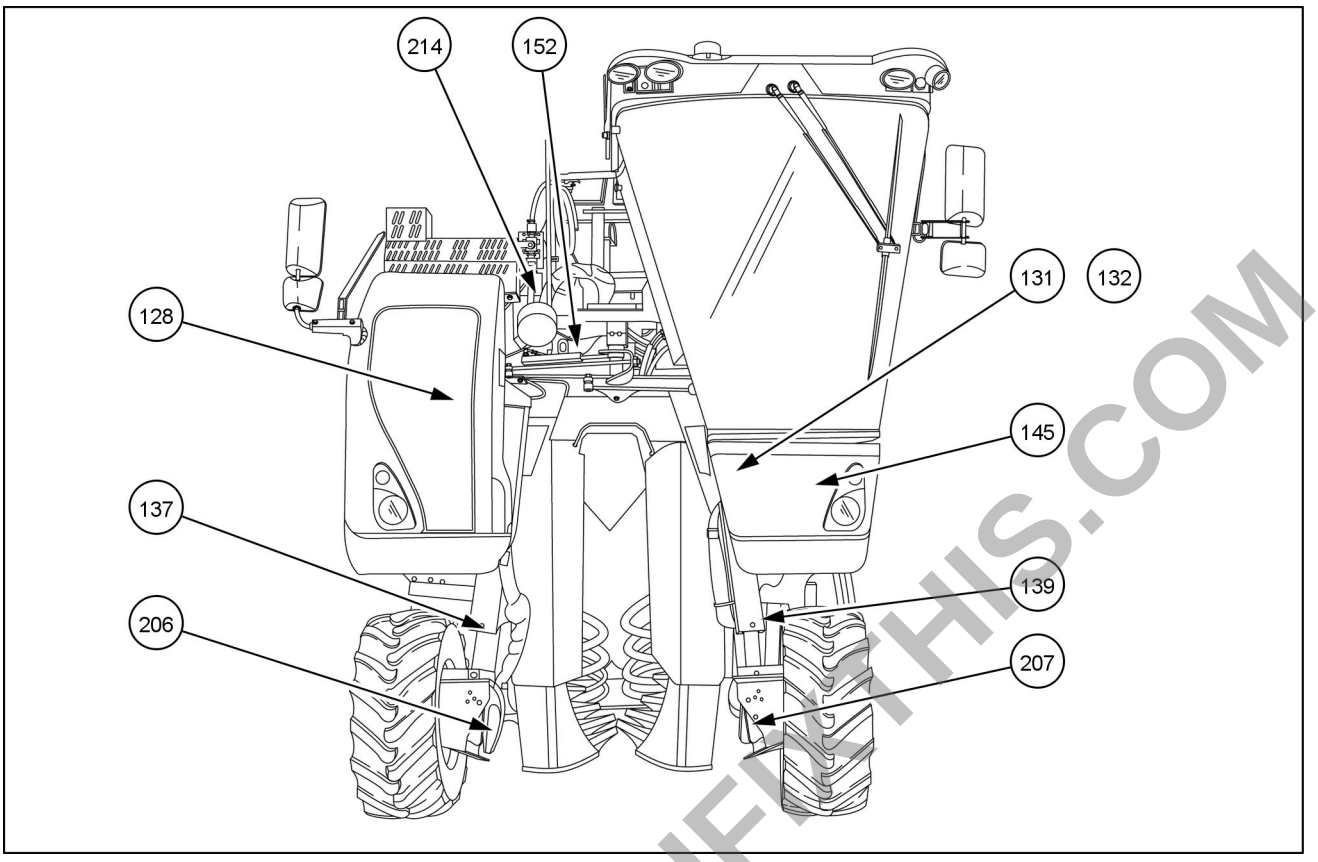

COIL14GR00174FA 1

Hydraulic components — front view

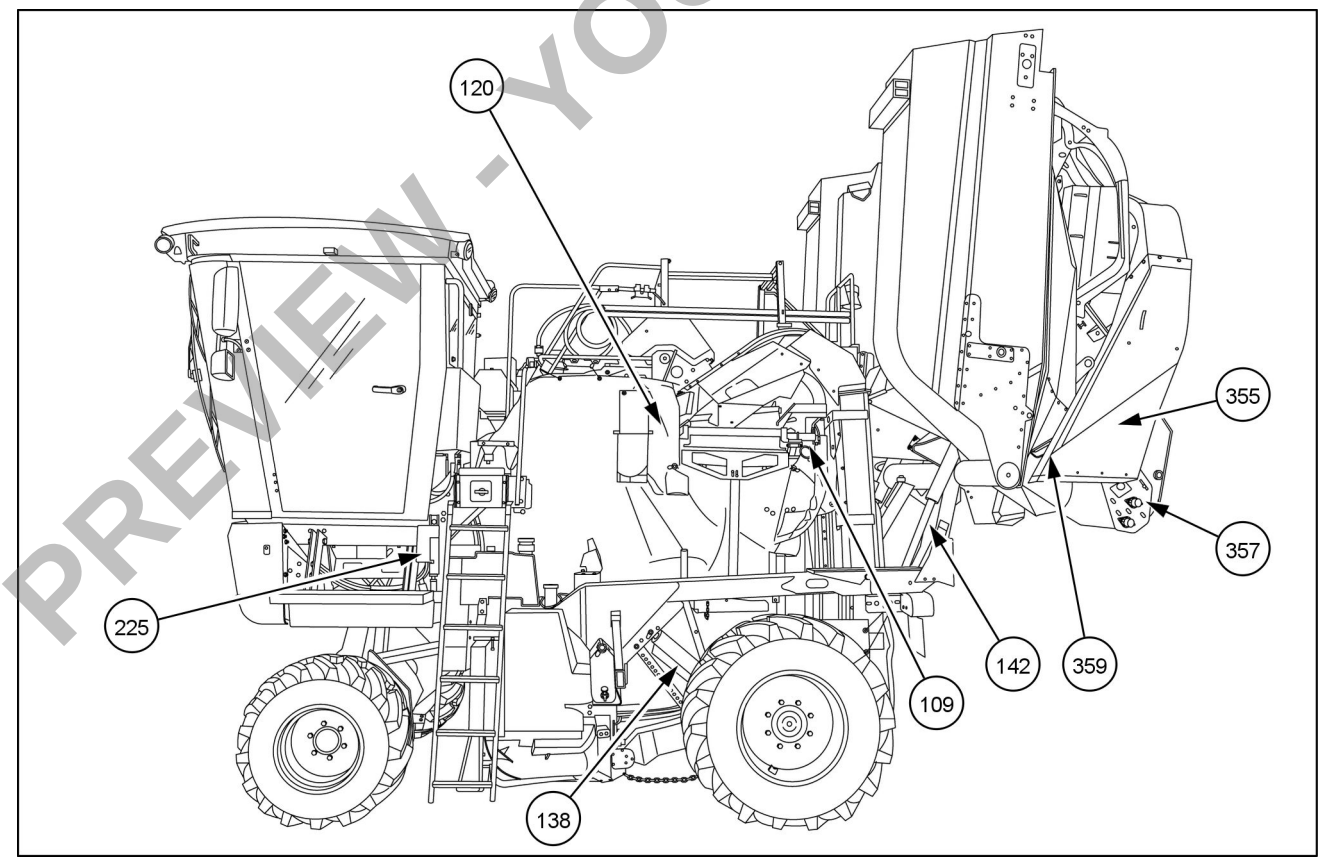

COIL14GR00172FA 2

Hydraulic components — left-hand view

PREVIEW - YOUFIXTHIS.COM

Download full manual at youfixthis.com

Frame - General specification 7030M and 8030L

General data

The machine chassis comprises the structure that will bear all the components, as well as the front wheel struts and rear wheel arms.

CHASSIS ON A 7030M

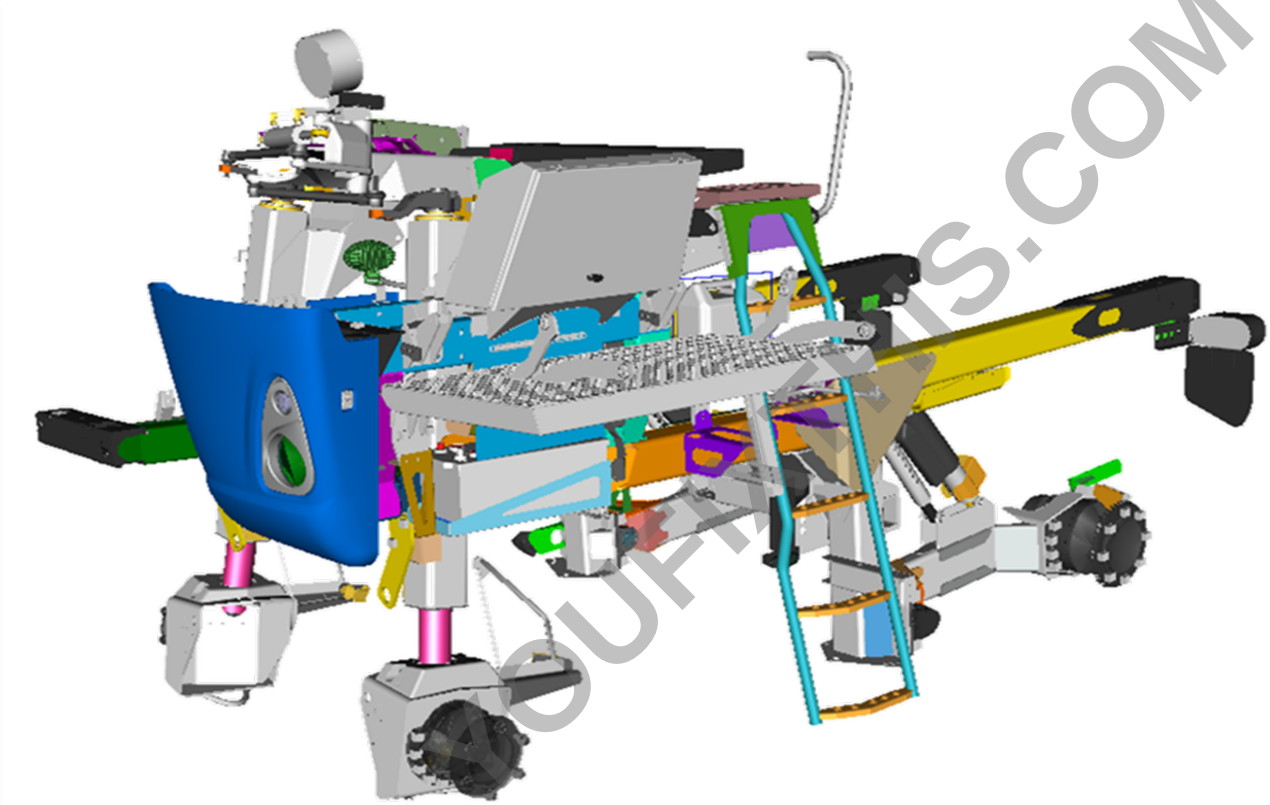

COIL15GR01196TA 1

PREVIEW - YOUFIXTHIS.COM

Download full manual at youfixthis.com

Heater core - Remove

⚠ WARNING

Hot surface possible!
Wait for all components to cool before performing any operation.
Failure to comply could result in death or serious injury.

W0251A

1. Remove the filter outer cover.

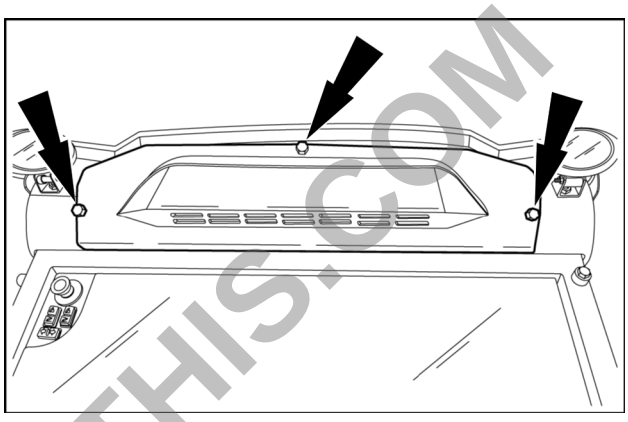

COIL15GR00275AA 1

2. Raise the roof panel.

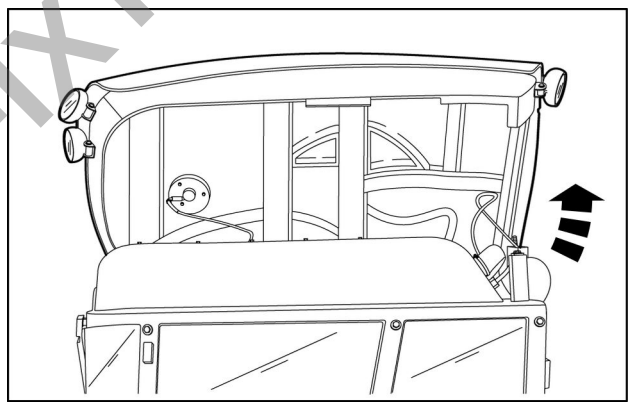

COIL15GR00272AA 2

3. Remove the cab roof access panel retaining screws.

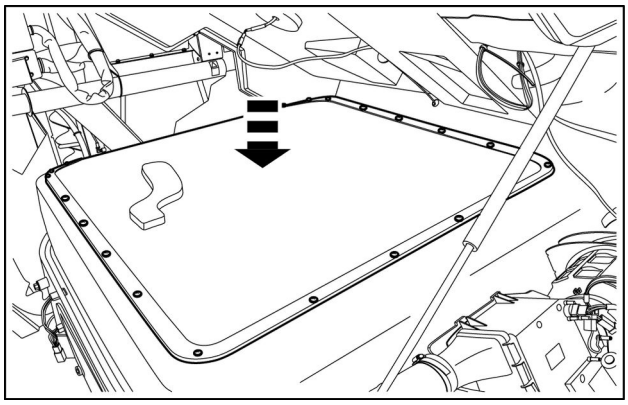

COIL15GR00273AA 3

PREVIEW - YOUFIXTHIS.COM

Download full manual at youfixthis.com

Electrical system - General specification

Fuses

Fuses protect circuits with thin pieces of metal and wire that heat up and melt to open the circuit when too much current flows through them. The machine fuse board is located inside the cab behind the operator's seat, in the electric power board.

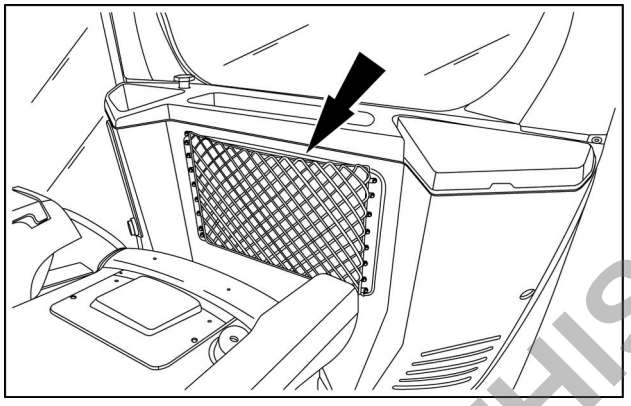

COIL15GR00839AA 1

Fuses are used to protect the circuit from overload. This can occur in the event of a short circuit or when connecting equipment that demands a current greater than the circuit is designed to carry.
There are several types of fuses, but they all consist of a metal conductor that is capable of carrying a limited current. If the specified current is exceeded, the metal conductor overheats, causing it to melt and break. This in turn causes an open circuit.
The rating of the fuse relates to the current that the fuse can carry continuously.
Replace blown fuses with a fuse of the same nominal value. If the fuse blows again, look for the cause of the problem.
Two types of fuses are fitted:
- Standard **1 A** to **25 A** fuses
- Maxi **30 A** to **60 A** fuses

When a fuse has blown, a LED will illuminate to identify the location.
To test a fuse, check the continuity of the fuse on the two exposed terminals, or place it in the holder; a green LED lights if it is in good condition.

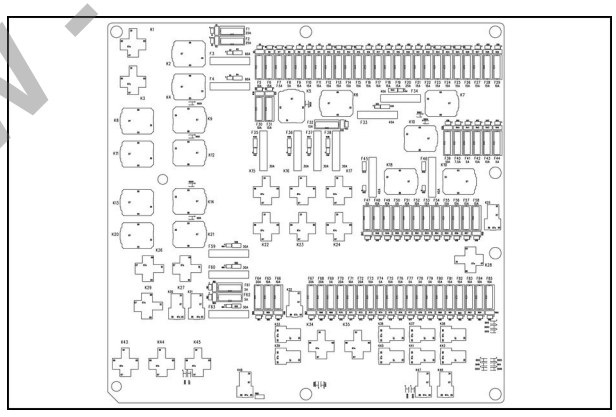

COIL15GR00167FA 2

Switches

Switches are a vital part of electric circuits, providing a method of controlling the circuit. One switch can control a number of different circuits at the same time. This is achieved with several connections and/or multiconnector switches (several switch positions). There are several types of switches, and they may incorporate warning lights.

PREVIEW - YOUFIXTHIS.COM
Download full manual at youfixthis.com

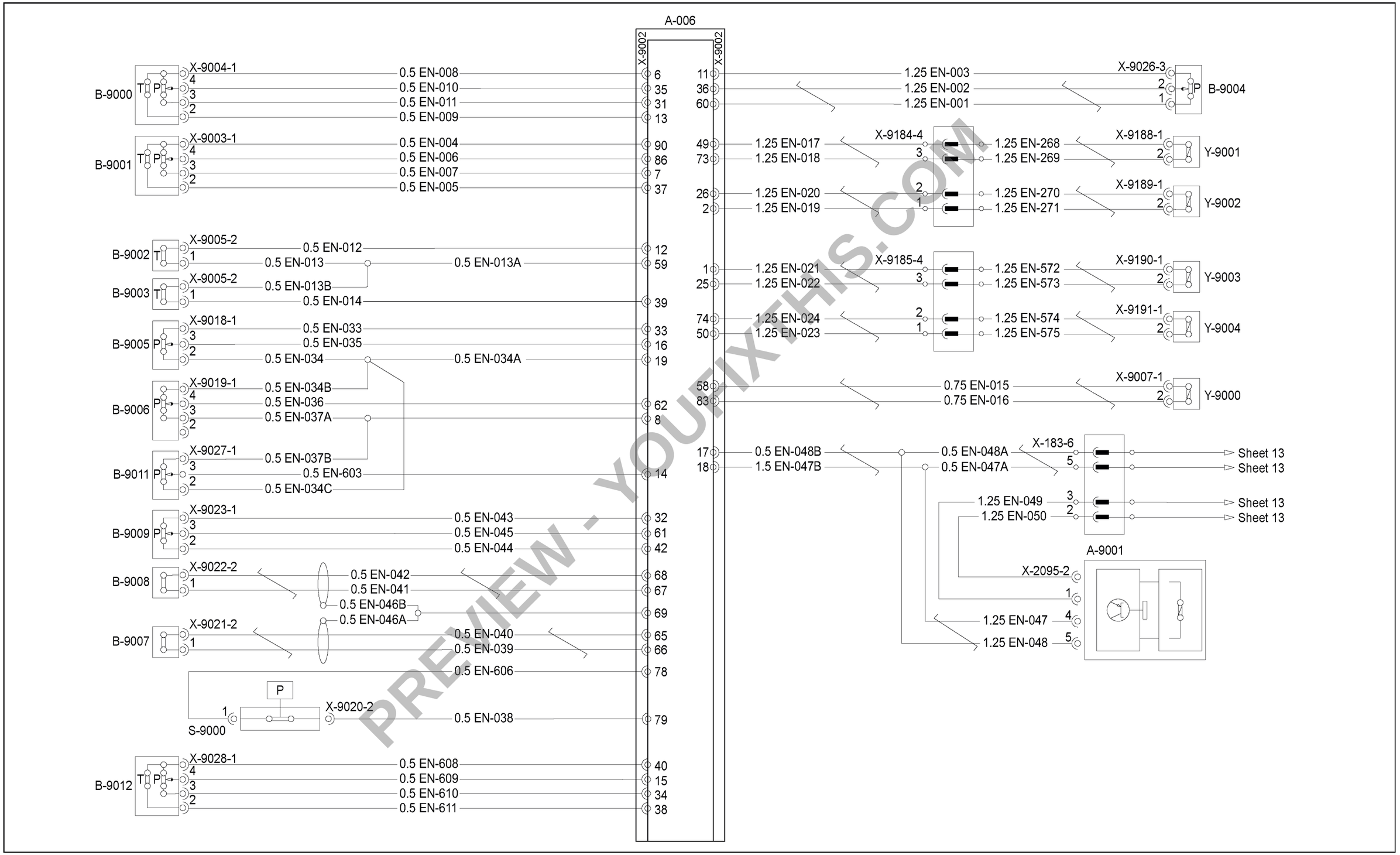

COIL15GR00873JB 1

PREVIEW - YOUFIXTHIS.COM

Download full manual at youfixthis.com

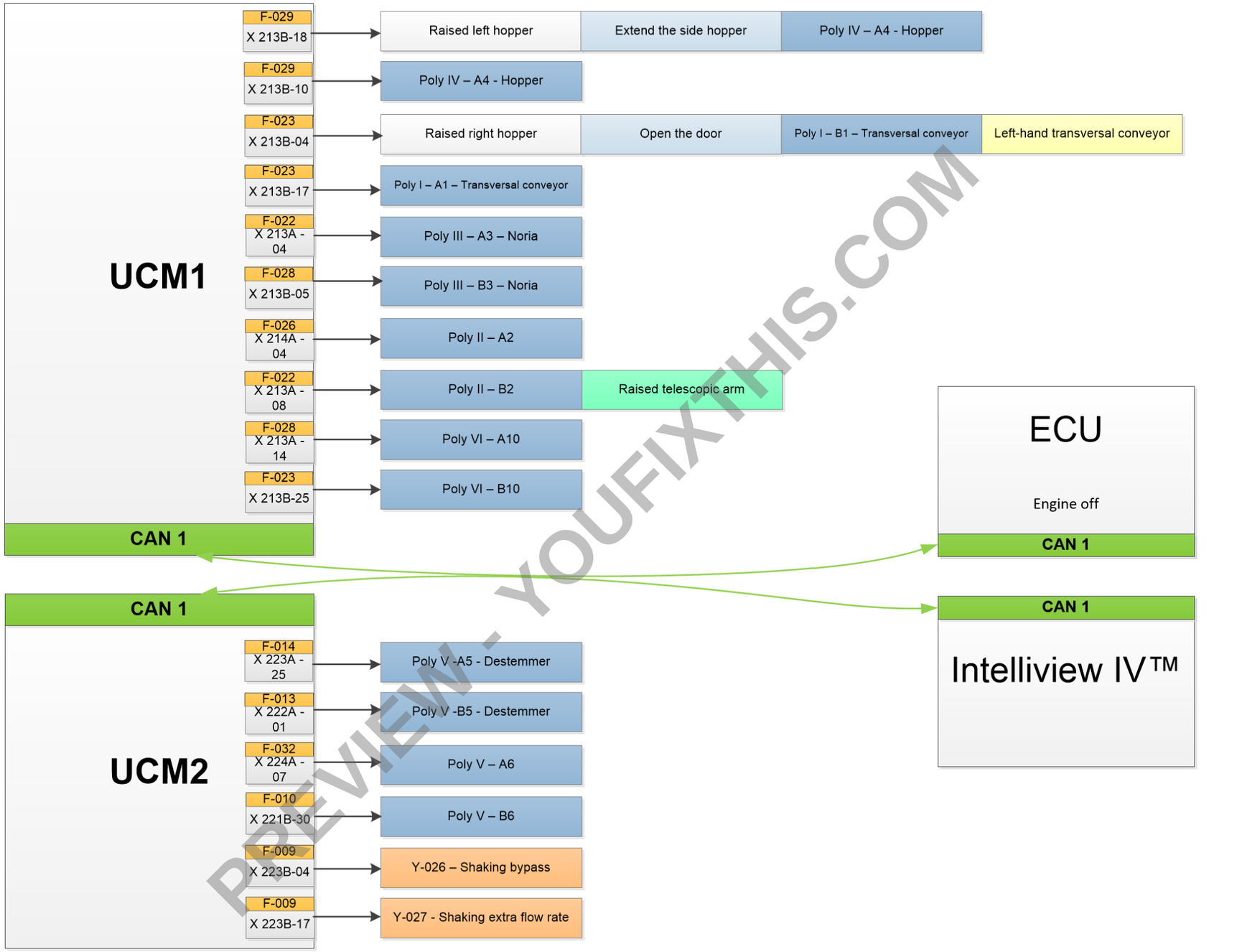

Key:

MLX machines	Telescopic arm	Side hopper machine	N machine	Grand Export machine	All machines

COIL17GR03184JA 2

PREVIEW - YOUFIXTHIS.COM

Download full manual at youfixthis.com

Electrical systems - 55

FAULT CODES - DTC

9050L
9070L
9070M

PREVIEW - YOUFIXTHIS.COM

Download full manual at youfixthis.com

E0005-03 - Rev drive pressure HP - Voltage above normal or shorted to high source

Control Module: UCM1

NOTE: *When the cause of the fault code has been rectified, refresh the fault code list and test the system for normal operation.*

NOTE: *For additional information on using the instrument cluster service mode, see* ***Instrument cluster - Detailed view (55.408)****.*

Cause:
The Universal Control Module (UCM) 1 **A-002** has detected a short circuit to a voltage greater than **5.5 V** at connector **X-213B (Female) pin 13**, wire 1270A (YE) from the HP pressure transmitter rearward sensor **B-090**.

Possible failure modes:

1. Faulty connector.
2. Faulty wiring harness.
3. Faulty **B-090**.
4. Faulty **A-002** software.
5. Faulty **A-002**.

Solution:

1. Verify the fault code is still present.
   Using the instrument cluster service mode, record all the fault codes present.
   Refresh the fault codes list and check for correct operation of the machine.

   A. If the fault code is not present, the fault may be intermittent. Operate the machine and check for an intermittent fault.

   B. If the fault code is still present, continue to Step **2**.
2. Inspect the **B-090** condition.
   Visually inspect the **B-090** condition, checking for security, damage, contamination and blockages.

   A. If the **B-090** is insecure, damaged, contaminated or operation blocked, repair the fault. Refresh the fault codes list and check for correct operation of the machine.

   B. If there is no visual fault with the **B-090**, continue to Step **3**.
3. Inspect the wiring harness and connectors.
   Check the **A-002** connector **X-213B**, the wiring harness connector **X-039-ET4** / **X-039-MB** and the **B-090** connector **X-007**.
   Make sure the connectors are connected, not damaged, the pins are in the correct position and that the fit is tight.

   A. If a fault is indicated, repair or replace as required.

   B. If the connectors are okay, continue to Step **4**.
4. Check for a short circuit.
   Turn the ignition switch OFF.
   Disconnect the connector **X-007**.
   Turn the ignition switch ON.
   Use a multimeter to perform the following voltage check:

From	To	Result
X-007 (Female) pin A, wire 3090F (PK)	Ground	Should be approximately **12 V**

   A. If the voltage indicated is greater than **15.5 V**, check for a charging system fault.

PREVIEW - YOUFIXTHIS.COM
Download full manual at youfixthis.com

Index

Electrical systems - 55

FAULT CODES - DTC

DTC 1113 - Engine coolant temperature sensor voltage is higher than expected 49
DTC 1113 - Engine coolant temperature sensor voltage is higher than expected 51
DTC 1113 - Engine coolant temperature sensor voltage is higher than expected 53
DTC 1145 - Fuel pressure relief valve reached maximum allowed opening count 55
DTC 1145 - Fuel pressure relief valve reached maximum allowed opening count 56
DTC 1145 - Fuel pressure relief valve reached maximum allowed opening count 57
DTC 115D - ECU temperature sensor 1 is too high 58
DTC 115D - ECU temperature sensor 1 is too high 59
DTC 115D - ECU temperature sensor 1 is too high 60
DTC 1161 - Battery voltage is higher than expected 61
DTC 1161 - Battery voltage is higher than expected 62
DTC 1161 - Battery voltage is higher than expected 63
DTC 119A - DEF/AdBlue tank level sensor voltage too high 64
DTC 119A - DEF/AdBlue tank level sensor voltage too high 66
DTC 119A - DEF/AdBlue tank level sensor voltage too high 68
DTC 11C-Max - Water detected in fuel - Shorted to high source 48
DTC 11CE - Upstream NOx sensor self-diagnosis result is higher than the limit 70
DTC 11CE - Upstream NOx sensor self-diagnosis result is higher than the limit 71
DTC 11CE - Upstream NOx sensor self-diagnosis result is higher than the limit 72
DTC 11E3 - Oil temperature sensor voltage is higher than expected 73
DTC 11E3 - Oil temperature sensor voltage is higher than expected 75
DTC 11E3 - Oil temperature sensor voltage is higher than expected 77
DTC 1225 - Rail pressure sensor value is above maximum offset 79
DTC 1225 - Rail pressure sensor value is above maximum offset 80
DTC 1225 - Rail pressure sensor value is above maximum offset 81
DTC 125D - ECU temperature sensor 2 is too high 82
DTC 125D - ECU temperature sensor 2 is too high 83
DTC 125D - ECU temperature sensor 2 is too high 84
DTC 1338 - Over boost failure 85
DTC 1338 - Over boost failure 87
DTC 1338 - Over boost failure 89
DTC 1361 - Battery voltage is higher than expected 91
DTC 1361 - Battery voltage is higher than expected 92
DTC 1361 - Battery voltage is higher than expected 93

PREVIEW - YOUFIXTHIS.COM

Download full manual at youfixthis.com

Shaking frame - General specification

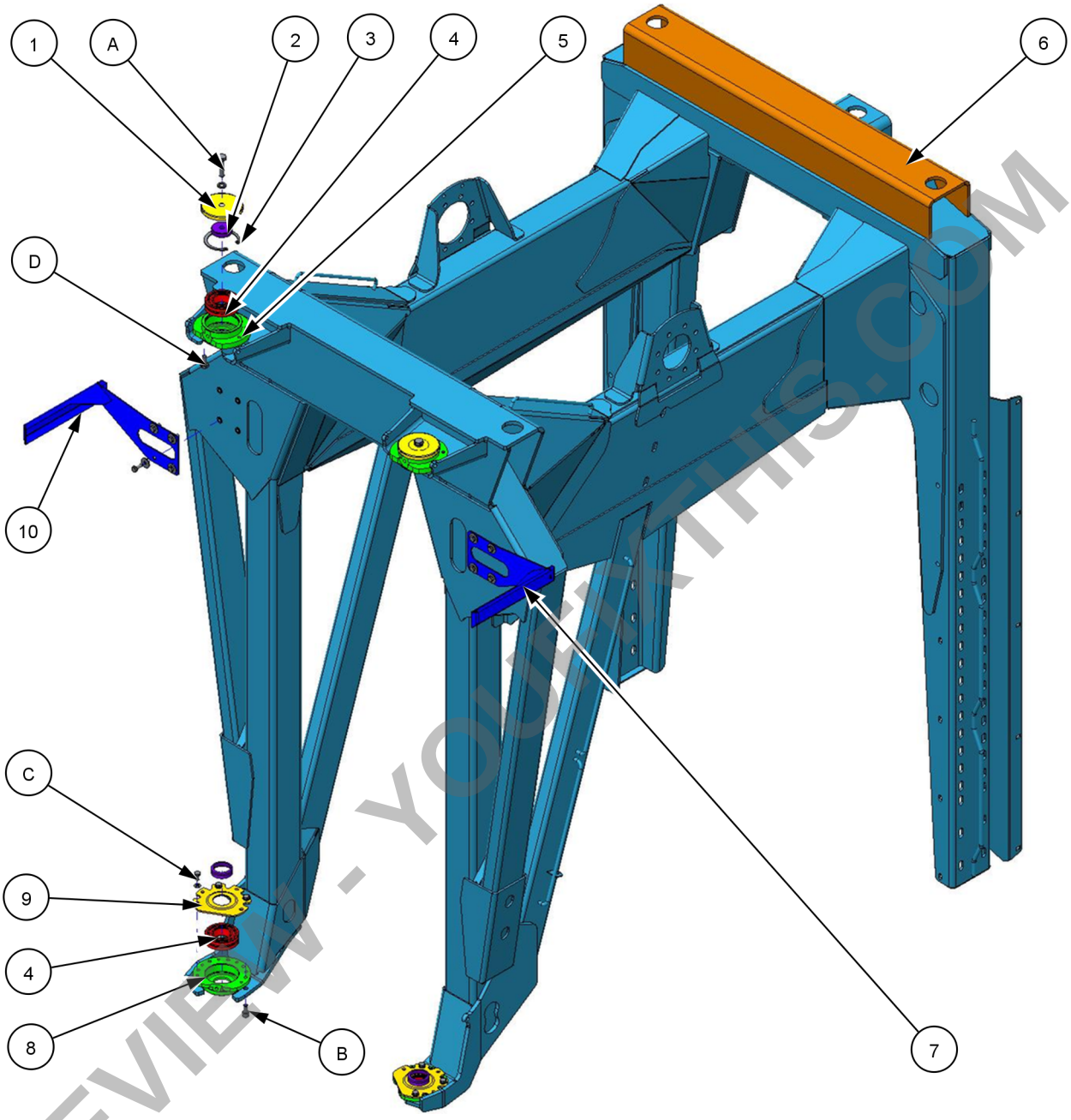

COIL17GR00875UA 1

	DESCRIPTION
1	Retaining cup
2	Flat washer
3	Circlip
4	Swivelling roller bearing
5	Upper bearing
6	Fixed shaker frame
7	Left-hand tarpaulin spreader
8	Lower bearing support
9	Lower bearing cap
10	Right-hand tarpaulin spreader
A	**LOCTITE® 243™** medium thread lock, tightening torque **110.0 N·m** (**81.1 lb ft**)
B	**LOCTITE® 273** strong thread lock, tightening torque **65 N·m** (**0.0 lb ft**)
C	Tightening Torque **33.0 N·m** (**24.3 lb ft**)

PREVIEW - YOUFIXTHIS.COM

Download full manual at youfixthis.com

Conveyor belt replacement

NOTE: *These instructions depict the removal of the left-hand conveyor belt, the removal of the right-hand conveyor belt is the same.*

1. Raise the hoppers.

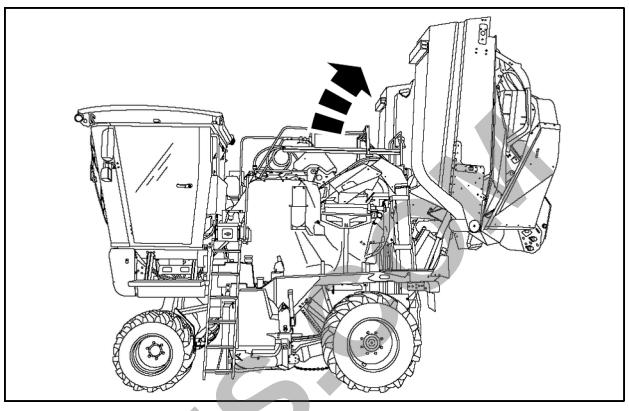

COIL14GR00172AA 1

2. Install the left-hand and right-hand hopper cylinder locks.

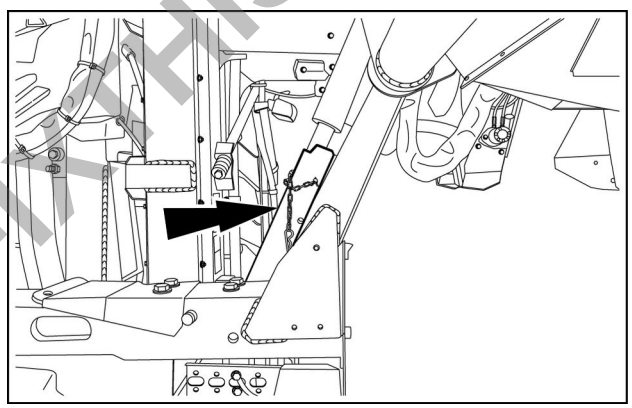

COIL15GR00350AA 2

Compact

3. Open the conveyor door.

NOTICE: *The conveyor door must be closed when lowering the hoppers.*

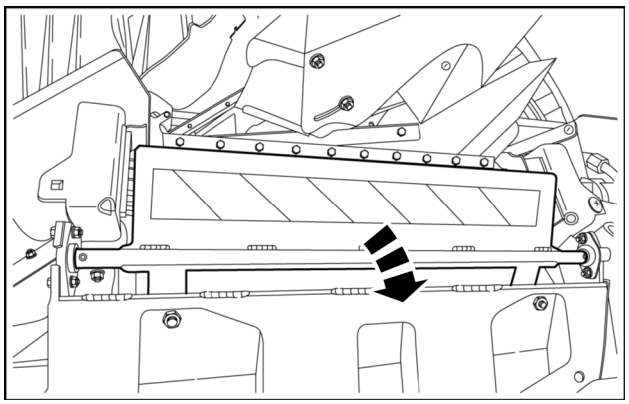

COIL15GR00561AA 3

9070M, 9050L, 9050LH, 9070L, 9070LH models

4. Start the engine.

PREVIEW - YOUFIXTHIS.COM

Download full manual at youfixthis.com

Upper extractors - Overview - The upper intakes

General data

Installed above each hopper, the upper intakes consist of several sub-assemblies.

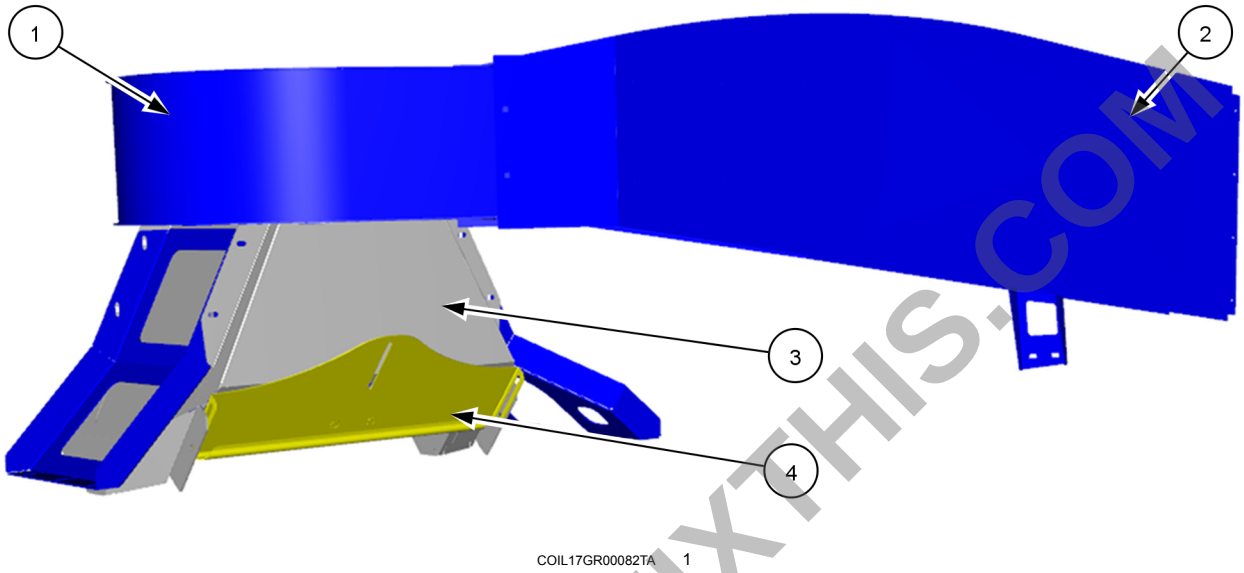

COIL17GR00082TA 1

(1) Stator
(2) Discharge chute
(3) Hood
(4) Adjustable flap

The extractor's suction capacity depends on the quantity of air that can be drawn in and the quantity of air that can be expelled. Make sure that the ejection chute is well-cleaned daily to maintain a good cleaning capacity.

The suction capacity can be altered using the adjustable flap (4). The further the flap is raised, the higher the suction capacity. The further the flap is lowered, the more limited the suction capacity (for instances where juice is being drawn in, for example).

The flap can be adjusted depending on the yield to optimise air flow.

Intake chutes for a hopper auger machine:

The ejection chutes on hopper auger machines go to the centre of the machine.

PREVIEW - YOUFIXTHIS.COM

Download full manual at youfixthis.com

Sorting table (Opti-grape™) - Overview - Opti-Grape™

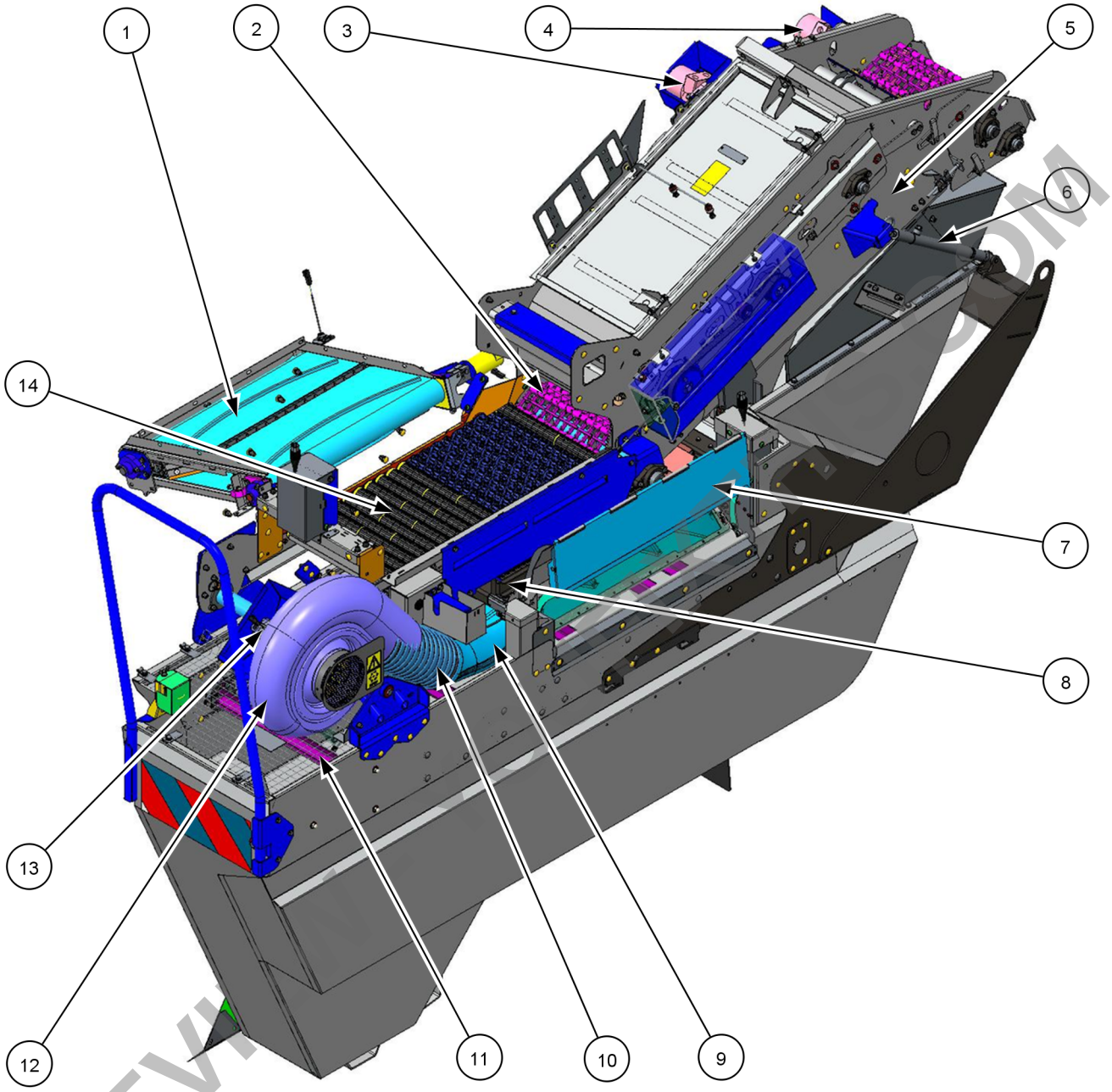

COIL17GR00879UA 1

	DESCRIPTION
1	Feeder
2	Destemmer sieve
3	Destemmer drive motor
4	Sieve drive motor
5	Destemmer box
6	Destemmer lift cylinder
7	Side flap
8	Sorting table
9	Air box
10	Corrugated duct
11	Distributor chain
12	Impeller
13	Turbine drive motor

Download full manual at youfixthis.com

Bin - General specification - The hopper augers

General data

The hopper augers are driven hydraulically.

Each hopper auger has a spiral, which sends the crop to the rear of the hopper.

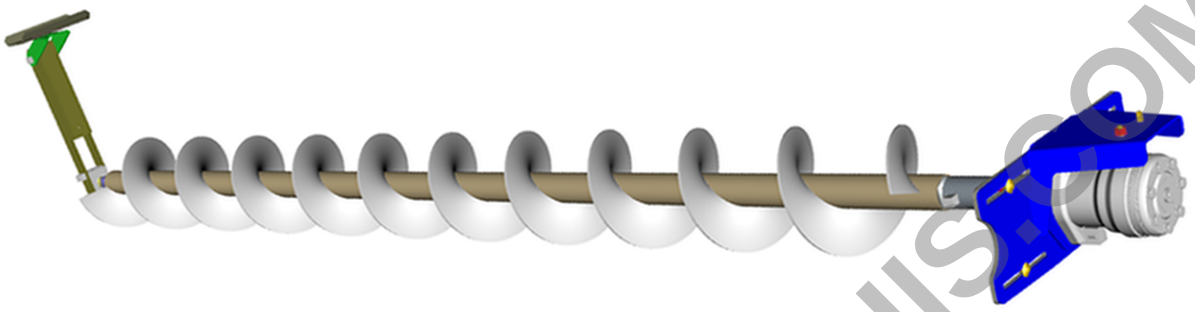

COIL16GR02860SA 1

Position of the hopper auger

The position of the hopper auger can be adjusted in the hopper:

- Forwards to back
- Sideways

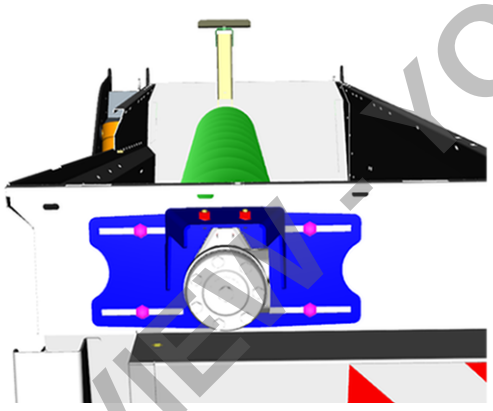

COIL17GR01362PA 2

Side adjustment at the front

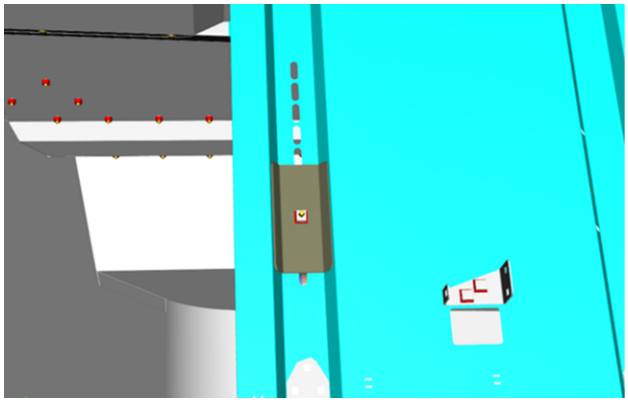

COIL17GR01364PA 3

Side adjustment at the rear

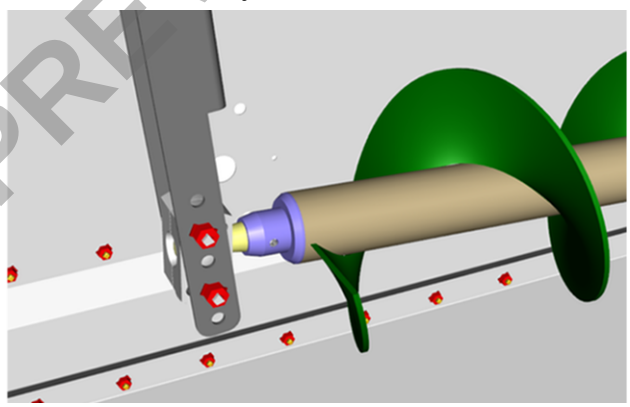

COIL17GR01363PA 4

Height adjustment at the rear

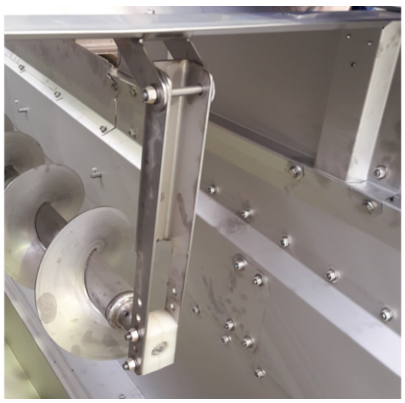

COIL17GR01365PA 5

To adjust the screw position: **Bin - Operating (80.300)**

PREVIEW - YOUFIXTHIS.COM
Download full manual at youfixthis.com

Accessories - Detailed view - Berthoud new features

Disabling the VECs

It is now possible to open and close the VECs on either side of the ramp based on the shape of the plot.

When the operator enters a row, it is possible that the rows to be worked do not all start in the same place. In this case, the operator can decide to open the VECs, one by one, from right to left or from left to right.

The same is also possible when closing the VECs, if the rows do not all finish in the same place.

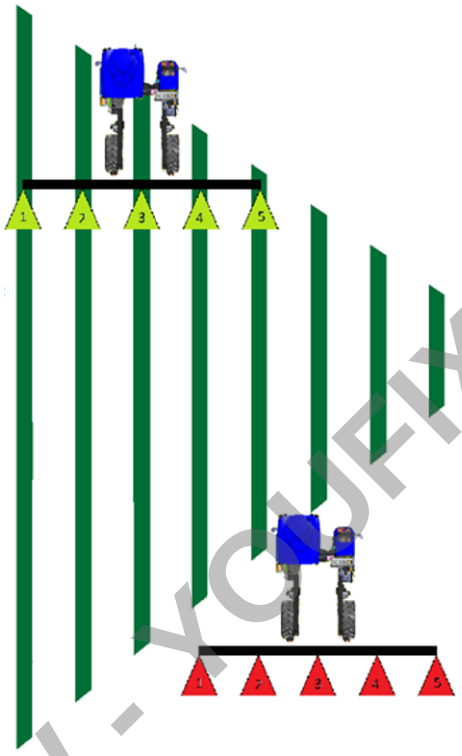

COIL18GR01514TA 1

This system is called VEC sequencing. The VEC sequencing installation must be configured in the **IntelliView™ IV** to be able to use it. This setting is performed in the **IntelliView™ IV** configuration menu where it is indicated if VEC sequencing is installed or not.

To operate the system, first of all the operator must activate the ACS by pressing B2 (or Auto on 9080N machines). The ACS takes several seconds to activate and during this activation time you must press the M button on the multi-function handle twice. By double pressing the M button a window will appear for **60 s**.

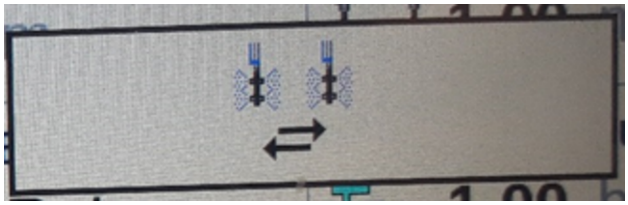

COIL17GR01545PA 2

Whilst this window is displayed, using "+" or "-", the operator can select the VECs they wish to open.

By pressing "+", the VECs open one by one, from right to left.

By pressing "-", the VECs open one by one, from left to right.

PREVIEW - YOUFIXTHIS.COM
Download full manual at youfixthis.com

Engine hood - Install

NOTE: *The hood weighs approximately* ***31 kg****, use suitable lifting equipment or the assistance of another person during this procedure.*

1. Using suitable lifting equipment, support the hood.

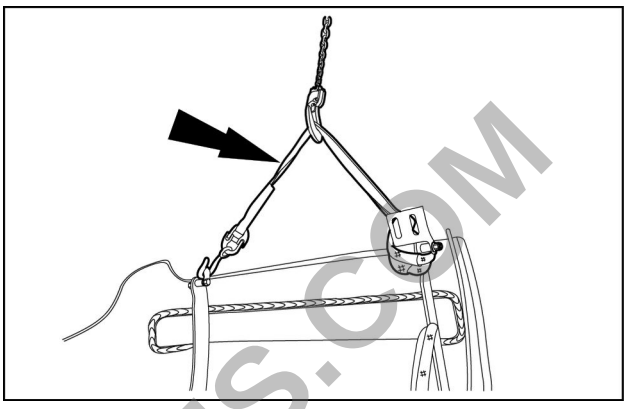

COIL16GR01340AA 1

2. Install the hood **(2)**.
3. Install the hood left-hand retaining bolts **(1)**.

NOTE: *Install the spacer.*

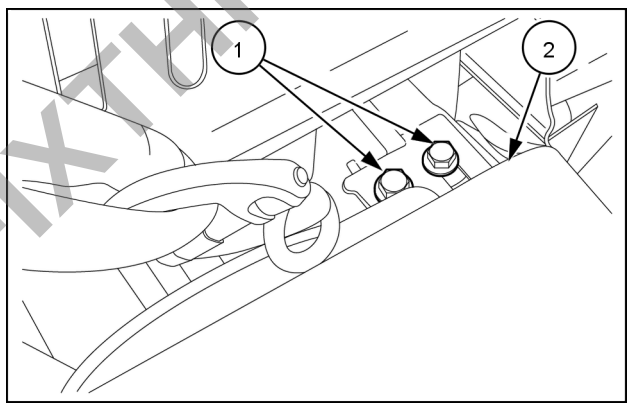

COIL16GR01339AA 2

4. Install the hood right-hand retaining bolts.

NOTE: *Install the spacer.*

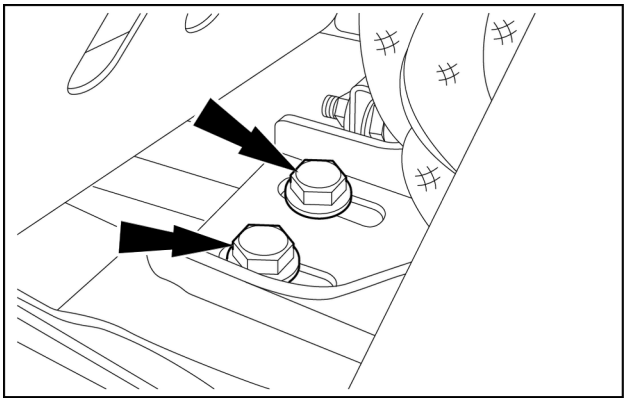

COIL16GR01338AA 3

5. Remove the lifting equipment.

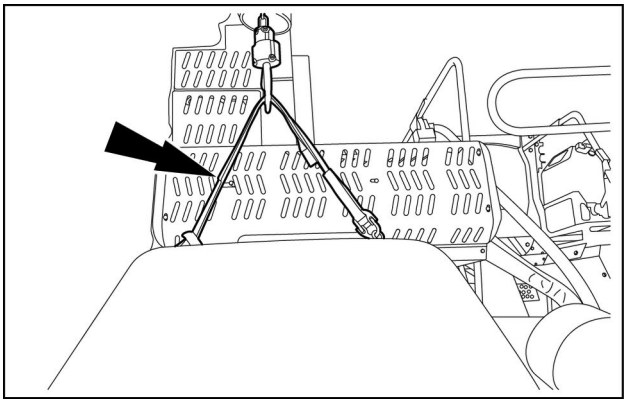

COIL16GR01337AA 4

PREVIEW - YOUFIXTHIS.COM
Download full manual at youfixthis.com

SPECIAL TOOL INDEX

Genuine	Reference	PAGE
380000558 [Vacuum / Charge Portable System]	Air conditioning - Special tools	50.2 / 4
380000315 [Recovery And Rrecharge Portable System (For Discharging And Recovering Of The Refrigerant)]	Air conditioning - Special tools	50.2 / 4
380000312 [Evaporator And Condenser Fin Cleaner]	Air conditioning - Special tools	50.2 / 4
380000314 [Electronic Gas Leakage Detector (R12 and R134a)]	Air conditioning - Special tools	50.2 / 4
380000333 [Sanden / Sankio Compressor Overload Kit]	Air conditioning - Special tools	50.2 / 4
380000333 [Sanden / Sankio Compressor Overload Kit]	Air-conditioning compressor - Filling	50.2 / 35
380000333 [Sanden / Sankio Compressor Overload Kit]	Air-conditioning compressor Magnetic clutch - Disassemble	50.2 / 36
380000333 [Sanden / Sankio Compressor Overload Kit]	Air-conditioning compressor Magnetic clutch - Assemble	50.2 / 39
380100057 [Pressure Gauge and Hose Assembly]	DTC 19B5 - Fuel Filter: Main fuel filter clogged	55.15 / 225
380100057 [Pressure Gauge and Hose Assembly]	DTC 19B5 - Fuel Filter: Main fuel filter clogged	55.15 / 227
380100057 [Pressure Gauge and Hose Assembly]	DTC 19B5 - Fuel Filter: Main fuel filter clogged	55.15 / 229
380100057 [Pressure Gauge and Hose Assembly]	DTC 1AB5 - Fuel Filter: Main fuel filter clogged	55.15 / 258
380100057 [Pressure Gauge and Hose Assembly]	DTC 31E5 - Fuel pre-filter clog or circuit failure	55.15 / 505

PREVIEW - YOUFIXTHIS.COM

Download full manual at youfixthis.com

[35.706] Fruit repartition system 35.7
[35.902] Harvesting hopper hydraulic system 35.8
[35.903] Shaking hydraulic system 35.9
[35.904] Cleaning hydraulic system 35.10
[35.952] Destemmer system 35.11
[35.930] Conveyor receiver system 35.12
[35.310] Distributor and lines 35.13
[35.106] Variable displacement pump 35.14
[35.204] Remote control valves 35.15
Frames and ballasting 39
[39.100] Frame 39.1
Steering 41
[41.101] Steering control 41.1
Wheels 44
[44.000] Wheels 44.1
Cab climate control 50
[50.100] Heating 50.1
[50.200] Air conditioning 50.2
[50.300] Cab pressurizing system 50.3
Electrical systems 55
[55.000] Electrical system 55.1
[55.050] Heating, Ventilation, and Air-Conditioning (HVAC) control system 55.2
[55.100] Harnesses and connectors 55.3
[55.640] Electronic modules 55.4
[55.019] Hydrostatic drive control system 55.5
[55.512] Cab controls 55.6
[55.924] Cab fruit harvesting controls 55.7
[55.927] Shaking control system 55.8

PREVIEW - YOUFIXTHIS.COM

Download full manual at youfixthis.com

Electronic module - Logical diagram -Using the soft shift

The soft shift is not installed by default.

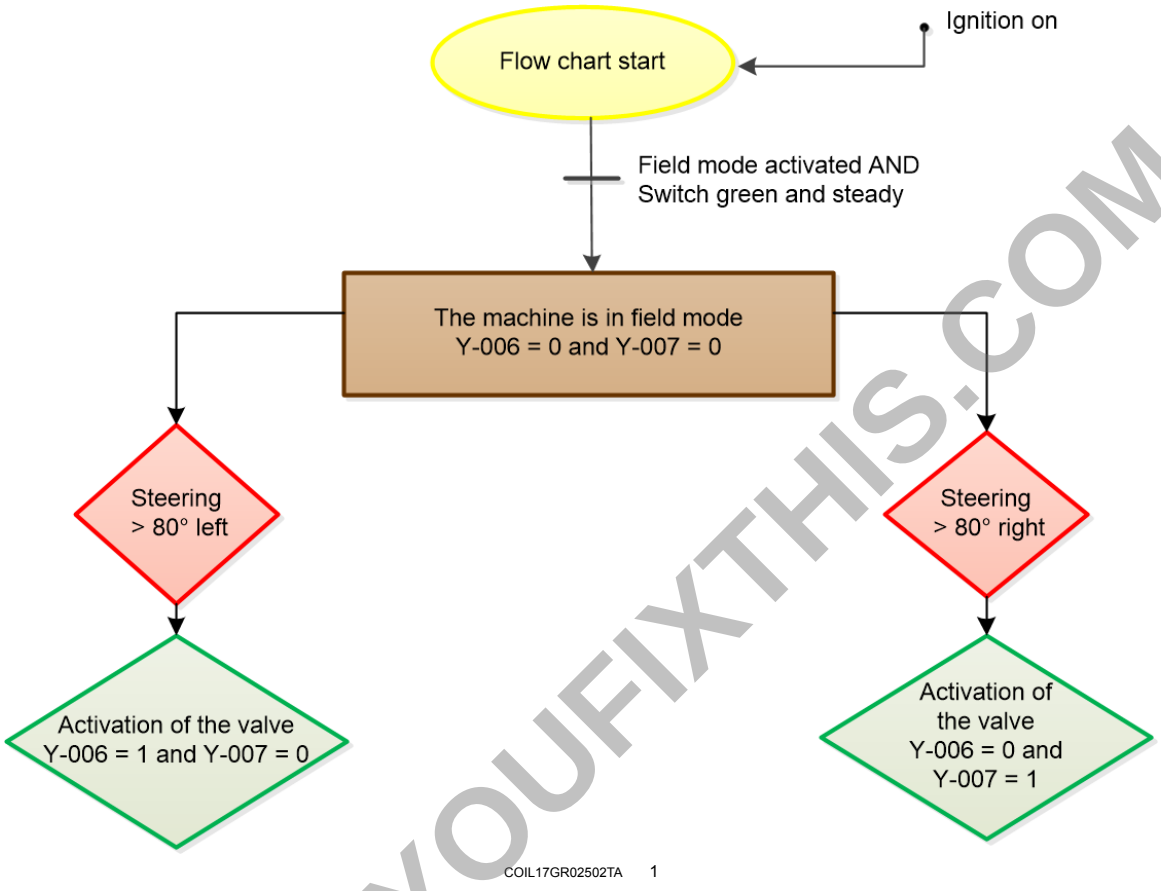

PREVIEW - YOUFIXTHIS.COM

Download full manual at youfixthis.com

DTC FABF - Remaining DEF/AdBlue is below the empty threshold

Control Module: ECU

NOTE: *Because this fault causes inducement, it is necessary to perform the Engine Restart Counter Reset / Unlock Inducement configuration with the Electronic Service Tool (EST) before you return the machine to service.*

Context:
For information regarding the functional operation of the Selective Catalytic Reduction (SCR) system see the engine manual. The Engine Control Unit (ECU) **A-006** monitors the level and temperature of the **Diesel Exhaust Fluid (DEF)/AdBlue®** fluid. If the level of the fluid becomes **0.0%** of full (empty), this fault will occur.

Cause:
The**DEF/AdBlue®** tank level and temperature sensor **B-070** level signal to the **A-006** is **0.0%** of full.

Possible failure modes:

1. **DEF/AdBlue®** fluid level, too low.
2. Faulty **B-070**, failed internally.
3. Faulty **A-006**, software.

Solution:

1. Fill the **DEF/AdBlue®** tank to the appropriate level.

   Then check to see that this fault has been resolved.

   A. If this fault is resolved, use the EST to perform the Engine Restart Counter Reset / Unlock Inducement configuration. Then return the machine to service.

   B. If this fault is not resolved, continue with Step **2**.
2. Verify the condition of the **B-070**.

   Disconnect the **B-070** at connector **X-182**.

   Use a multimeter to measure the resistance of the **B-070**:

From	To	Result
X-182 (Male) pin A	**X-182 (Male) pin B**	Should be greater than **12,000 Ω**

   A. If the measured resistance is greater than **12,000 Ω**, check the **A-006** for the appropriate software and re-flash, if necessary.

   B. If the measured resistance is less than **12,000 Ω**, the **B-070** has failed internally. Replace the **B-070** unit.

   NOTE: *Once the **B-070** has been removed, inspect the apparatus to determine if the filler spout magnet broke free of its mounting and became lodged causing a false reading.*

PREVIEW - YOUFIXTHIS.COM

Download full manual at youfixthis.com

PREVIEW ONLY

You're viewing 25 of 6463 pages

The full manual includes:

- All 6463 pages, complete
- Searchable PDF (find any keyword)
- No watermarks
- Instant download
- Print-ready quality

GET FULL MANUAL NOW

New Holland 9050L, 9070L, 9070M Service Manual

Scan or click anywhere
youfixthis.com

Click anywhere on this page to get the full manual