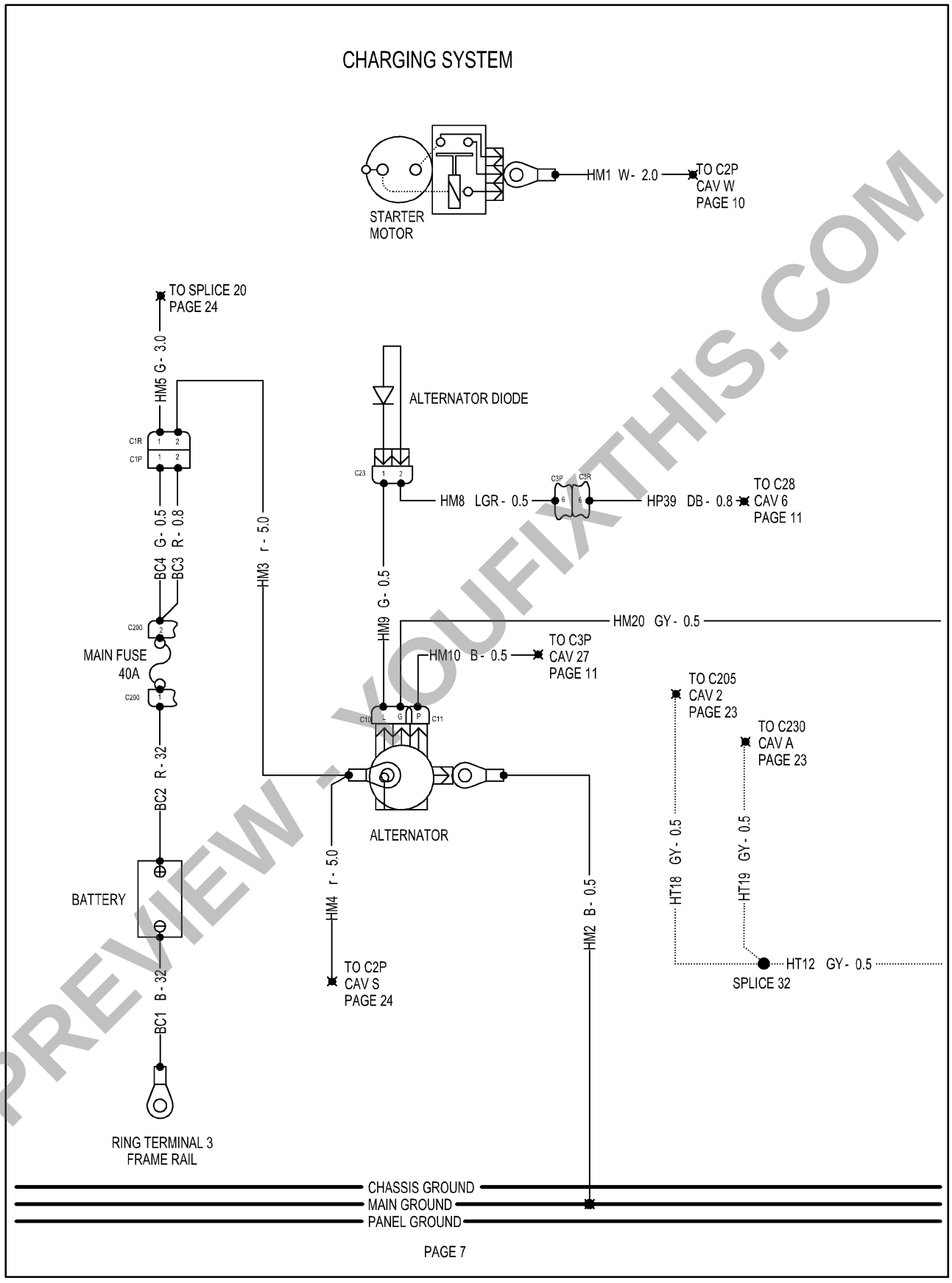

PREVIEW - YOUFIXTHIS.COM

Download full manual at youfixthis.com

SECTION 4
SPECIFICATIONS

	Model Boomer 4055	Model Boomer 4060
ENGINE		
Type/Model	Diesel/N844L-T	Diesel/844L-T
Engine Gross Horsepower	41.0 kw (55 HP)	44.7 kw (60 HP)
Cylinders	4	4
Bore	84 mm (3.31 in)	84 mm (3.31 in)
Stroke	100 mm (3.94 in)	100 mm (3.94 in)
Displacement	2.2 L (135.2 cu in)	2.2 L (135.2 cu in)
Compression Ratio	23.4:1	23.4:1
Firing Order	1-3-4-2	1-3-4-2
Low Idle Speed	1000 RPM (± 50)	1000 RPM (± 50)
Maximum Speed:		
High Idle	2900 RPM (± 50)	3000 RPM (± 50)
Rated	2700 RPM (± 50)	2800 RPM (± 50)
CAPACITIES		
Fuel Tank	60 liters/ 16 U.S. gals	60 liters/ 16 U.S. gals
Cooling System	9.0 liters/ 9.5 U.S. qts	9.0 liters/ 9.5 U.S. qts
Engine Crankcase:		
With Filter	7.0 liters/ 7.4 U.S. qts	7.0 liters/ 7.4 U.S. qts
Rear Axle & Transmission (Includes Hydraulics)	EHSS 46.0 liters/ 12.1 U.S. gals	EHSS 46.0 liters/ 12.1 U.S. gals
	SSS 38.0 liters/ 10 gals	SSS 38.0 liters/ 10 gals
Power Steering	1.8 liters/ 1.9 U.S. qts	1.8 liters/ 1.9 U.S. qts
Front Axle Final Reduction /Differential Gear Case	5.8 liters/ 6.1 U.S. qts	5.8 liters/ 6.1 U.S. qts

PREVIEW - YOUFIXTHIS.COM

Download full manual at youfixthis.com

LUBRICATION AND MAINTENANCE CHART
NEW HOLLAND BOOMER 4055, 4060 - FRONT-WHEEL DRIVE

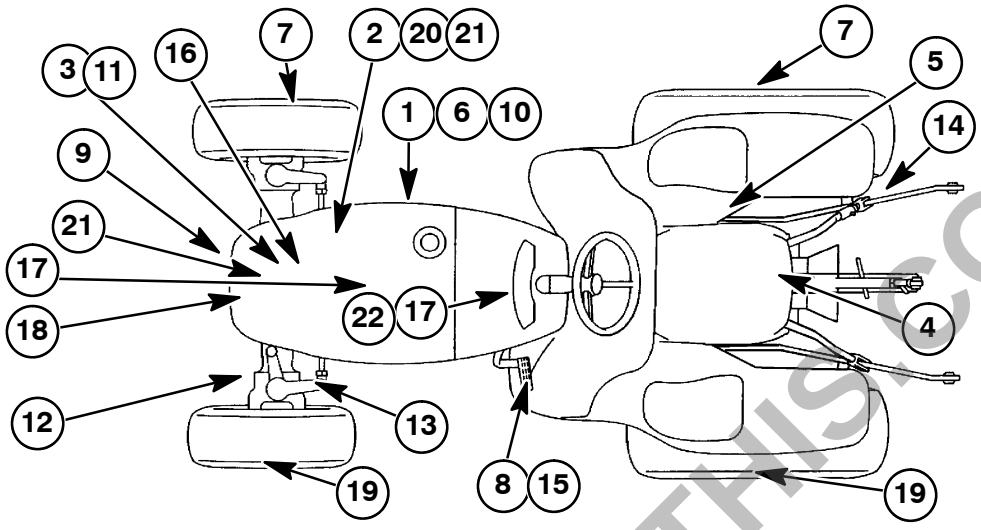

56065593

1

NO.	LUBRICATION & MAINTENANCE ITEMS	CHECK	CLEAN	LUBE	CHANGE	ADJUST	SERVICE INTER-VALS
1	Engine Oil Level	X					Every 10 Hours or Daily
2	Air Cleaner	X					
3	Radiator Coolant	X					
4	Transmission Oil Level	X					
5	Hydraulic Filter				X		First 50 Hours
1, 6	Engine Oil & Filter				X		
7	Tire Pressure	X					
10	Fuel Filter				X		
19	Wheel Bolt Torque	X					
—	All Fluid Levels	X					
8	Brake Pedal Free Play	X					
7	Tires	X					Every 50 Hours
8	Brake Pedal Free Play	X					
9	Battery	X					
11	Fan Belt	X					
12	Front Axle Oil Level	X					
	Lubrication Fittings:						
13	Steering Linkage			X			
14	3-Point Linkage			X			
15	Brake Pedal Shaft			X			
16	Power Steering Cylinder			X			
17	Drive Cover Shaft			X			
18	Axle Pivot Shaft			X			
22	Brake Pedal Cross Shaft			X			

NO.	LUBRICATION & MAINTENANCE ITEMS	CHECK	CLEAN	LUBE	CHANGE	ADJUST	SERVICE INTER-VALS
2	Air Cleaner Element		X				Every 100 Hours
10	Fuel Filter		X				
1, 6	Engine Oil & Filter				X		Every 200 Hours
8	Brake Pedal Free play					X	
11	Fan Belt					X	
19	Wheel Bolt Torque	X					
4	Transmission Oil				X		Every 300 Hours
5	Hydraulic Filter				X		
10	Fuel Filter Element				X		
12	Front Axle Oil				X		
20	Fuel Injector	X				X	Every 600 Hours
21	Valve Clearance	X				X	
2	Air Cleaner Element				X		Seasonal
3	Radiator Coolant				X		
2	Safety Air Filter Element				X		Every 3rd Primary Element Change or Every **1000** Hours, Whichever Comes First

PREVIEW - YOUFIXTHIS.COM

Download full manual at youfixthis.com

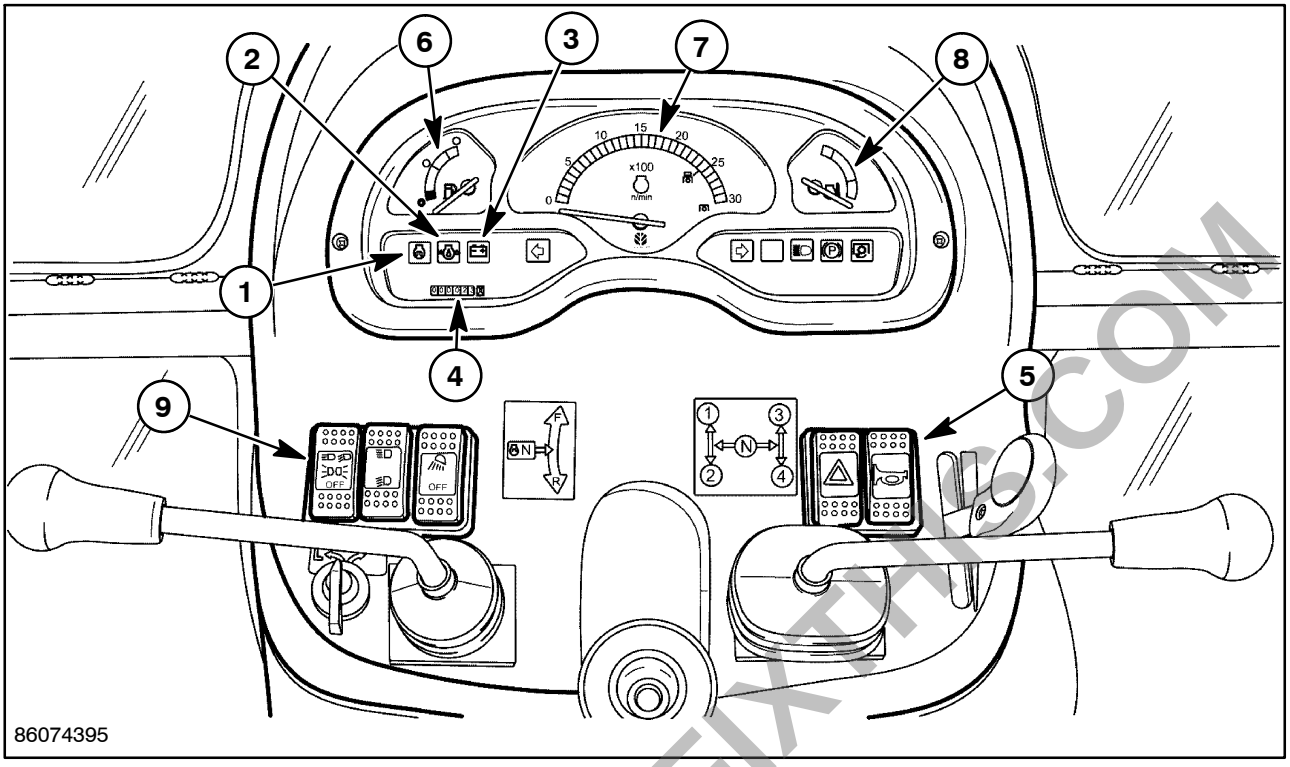

5

INSTRUMENT CONTROL PANEL

1. **Cold Starting Indicator Light** - Illuminates when the key switch is turned to the “ACC/RUN” position. It remains lit for approximately four seconds when the key is in position, during which time the glow plugs are heating the precombustion chambers of the cylinder head.
2. **Engine Oil Pressure Warning Light** - Illuminates with the key switch in the “ACC/RUN” position and remains lit for a short period of time after the engine is started. The light indicates oil pressure only, and goes out when sufficient oil pressure is present at the oil sender. If the bulb lights during operation, stop the tractor engine immediately and investigate the cause.
3. **Battery Charge Warning Light** - Illuminates when the key switch is in the “ACC/RUN” position and goes out when the engine is started. If this bulb lights during operation, it indicates that the charging system is not operating normally. As the battery can become fully discharged under these conditions, the problem should be investigated as soon as possible.
4. **Proof Meter** - Records the hours and portions of hours that your tractor has been operated, regardless of engine RPM. Use the proof meter as a guide to determine hourly service and maintenance intervals.
5. **Horn Switch** - Horn will be activated when switch is pushed into the front position, with the key in any position.
6. **Fuel Gauge** - Indicates the amount of diesel fuel remaining in the tank. The gauge is activated when the key switch is in the “ACC/RUN” position. It will resister “empty” with the key switch in the “STOP” position.
7. **Tachometer** - Registers engine RPM (Revolutions Per Minute) The gauge is marked in increments of 100 and will return to zero when the engine is not running.
8. **Temperature Gauge** - Indicates coolant temperature. It is activated when the key switch is turned to the “ACC/RUN” position. The gauge will register “cold” with the key switch in the “STOP” position. If the needle registers in the green range of the gauge, this indicates a normal operating temperature. If the needle moves to the red portion of the gauge, indicating an overheated condition, stop the tractor engine IMMEDIATELY and investigate the cause.
9. **Road Light Switch** - The lights will remain “OFF” with the switch in the rear position. When the switch is placed in the middle position, the instrument panel lamps and taillights will be illuminated, with the switch placed in the front position, the road lights (low beam) instrument panel lamps and taillights will be illuminated.

Download full manual at youfixthis.com

SECTION 2
OPERATION
CONTROLS AND INSTRUMENTS

SEAT, AND SEAT BELT

Adjusting the Tractor Seat

Your New Holland tractor is equipped with an adjustable suspension seat.

To move the seat fore and aft, raise the release lever, 1, and slide the seat forward or rearward to the desired position. Because the seat is on an inclined base, more effort is required to move the seat rearward.

To adjust the flotation of the seat, turn the knob, 2, clockwise for a firmer ride, or counter-clockwise for a softer ride. When the seat flotation is set as desired, fold the crank handle back into the knob.

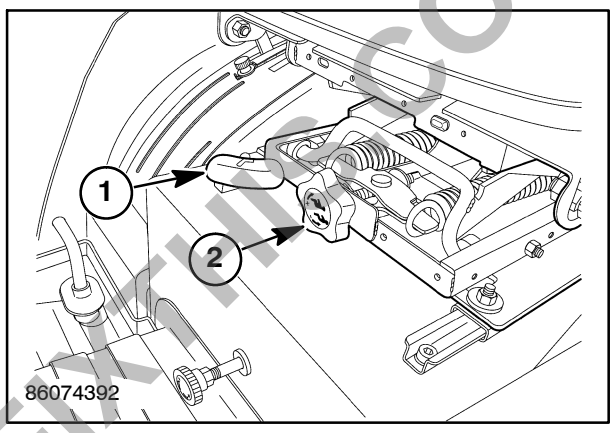

1

To swivel the seat, raise handle, 3, and rotate the seat **ONLY** to the right. The seat will rotate and lock at 10° or 20° **ONLY** to the right side.

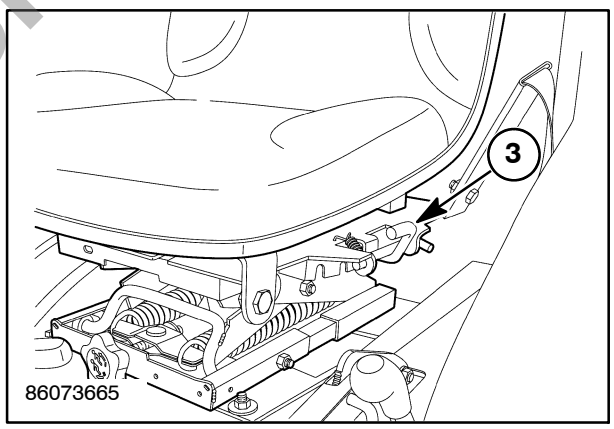

2

Adjusting the Seat Belt

The male end of the seat belt, 4, is part of a retraction mechanism, located on the right side of the seat. To extend length of seat belt, pull out on male end until correct length is obtained. To latch belt, insert male end, 4, into belt latch, 5, located on left side of seat. Be sure belt is securely latched and belt length is adjusted correctly for size of operator.

Use soap and water to clean the seat belt if necessary. Do not use carbon tetrachloride, naphtha, etc., as these substances will weaken the webbing. Additionally, do not bleach or re-dye the webbing, as these products will also weaken the webbing.

Replace the seat belt if it becomes damaged or worn.

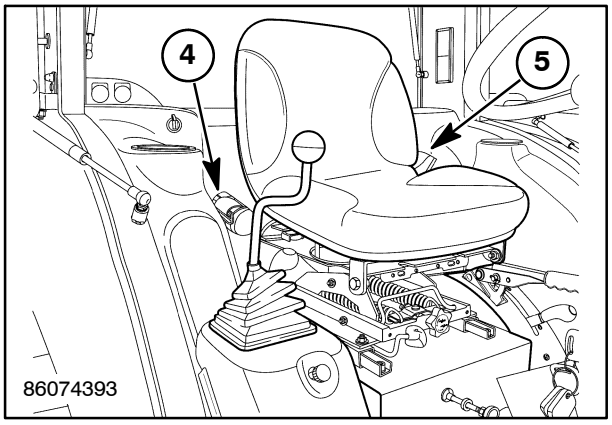

3

PREVIEW - YOUFIXTHIS.COM
Download full manual at youfixthis.com

MINIMUM HARDWARE TIGHTENING TORQUES

IN NEWTON-METERS (FOOT POUNDS) FOR NORMAL ASSEMBLY APPLICATIONS

METRIC NON-FLANGED HARDWARE AND LOCKNUTS

NOMINAL SIZE	CLASS 5.8		CLASS 8.8		CLASS 10.9		LOCKNUT CL.8 W/CL8.8 BOLT
	UNPLATED	PLATED W/ZnCr	UNPLATED	PLATED W/ZnCr	UNPLATED	PLATED W/ZnCr	
M4	1.7 (15)*	2.2 (19)*	2.6 (23)*	3.4 (30)*	3.7 (33)*	4.8 (42)*	2.3 (20)*
M6	5.8 (51)*	7.6 (67)*	8.9 (79)*	12 (102)*	13 (115)*	17 (150)*	7.8 (69)*
M8	14 (124)*	18 (159)*	22 (195)*	28 (248)*	31 (274)*	40 (354)*	19 (169)*
M10	28 (21)	36 (27)	43 (32)	56 (41)	61 (45)	79 (58)	38 (28)
M12	49 (36)	63 (46)	75 (55)	97 (72)	107 (79)	138 (102)	66 (49)
M16	121 (89)	158 (117)	186 (137)	240 (177)	266 (196)	344 (254)	164 (121)
M20	237 (175)	307 (226)	375 (277)	485 (358)	519 (383)	671 (495)	330 (243)
M24	411 (303)	531 (392)	648 (478)	839 (619)	897 (662)	1160 (855)	572 (422)

NOTE: Torque values shown with * are inch pounds.

IDENTIFICATION
HEX CAP SCREW AND CARRIAGE BOLTS
CLASSES 5.6 AND UP

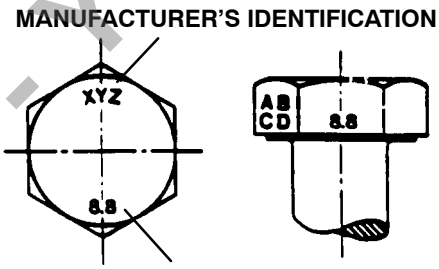

HEX NUTS AND LOCKNUTS
CLASSES 05 AND UP

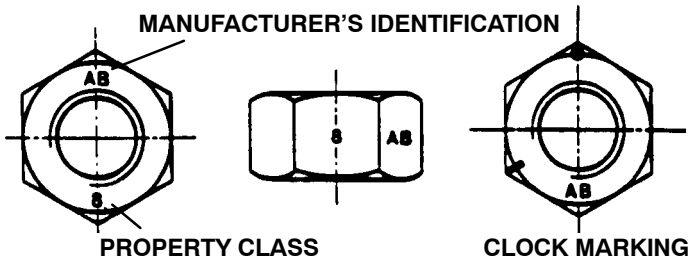

86529681 REV F 5.1

PREVIEW - YOUFIXTHIS.COM

Download full manual at youfixthis.com

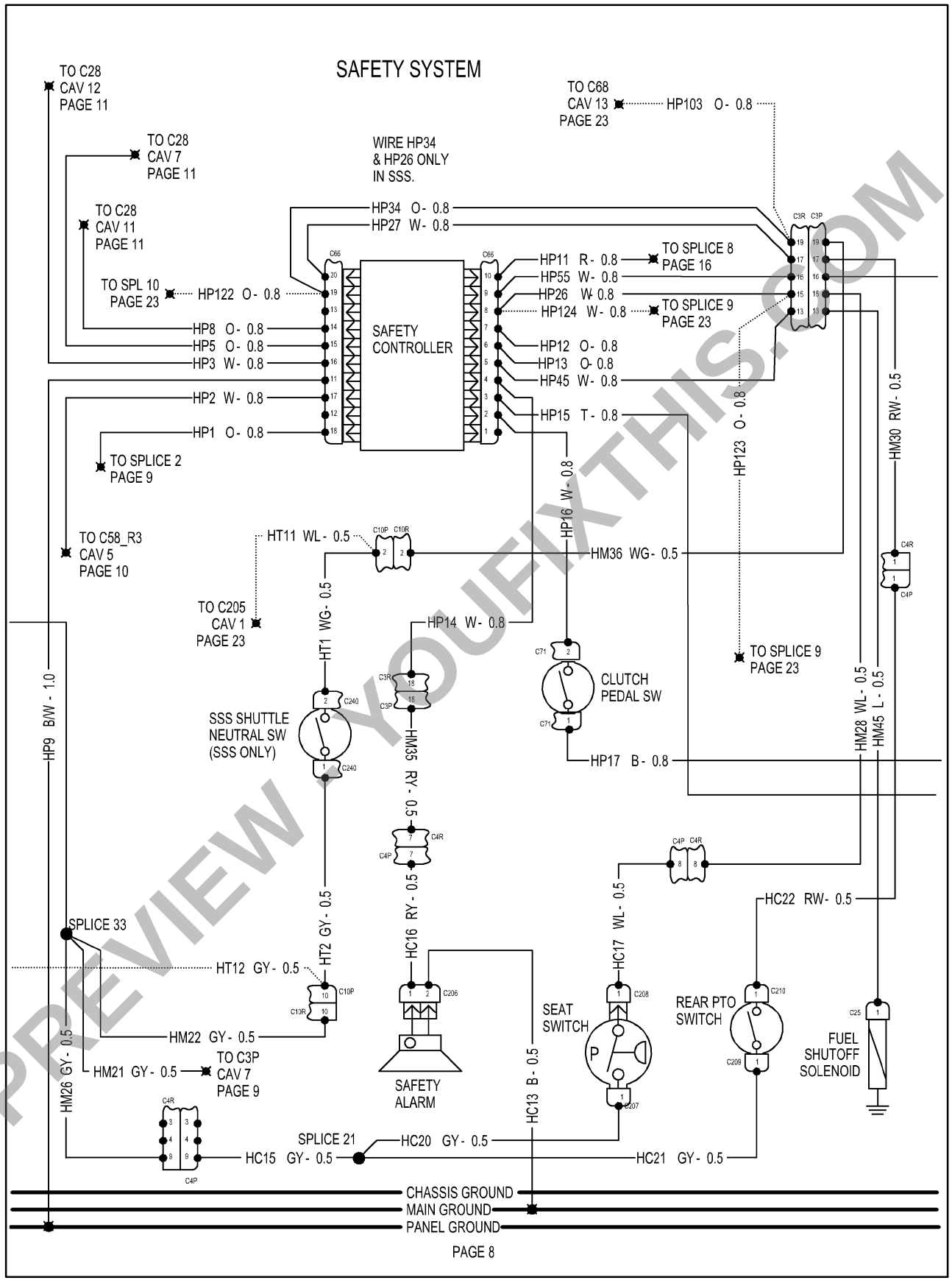

PREVIEW - YOUFIXTHIS.COM

Download full manual at youfixthis.com

	Model Boomer 4055	Model Boomer 4060
AIR CONDITIONING SYSTEM		
Compressor make/model	SANDEN/SD5H11	SANDEN/SD5H11
Bore	35 mm	35 mm
Stroke	22.6 mm	22.6 mm
Number of Cylinders	5	5
Refrigerant	R-134a	R-134a
Capacity	1.1 kg (2.4 lbs)	1.1 kg (2.4 lbs)
Oil	SP-20 (or equivalent)	SP-20 (or equivalent)
Capacity	135 ml (4.56 fl-oz)	135 ml (4.56 fl-oz)
Rotation	Clockwise	Clockwise
Blower Motor	3 Speed - Electric Switch	3 Speed - Electric Switch
Number of Interior Vents	8	8

PREVIEW - YOUFIXTHIS.COM

Download full manual at youfixthis.com

CAB MAINTENANCE CHART

NEW HOLLAND BOOMER 4055, 4060 - FRONT-WHEEL DRIVE

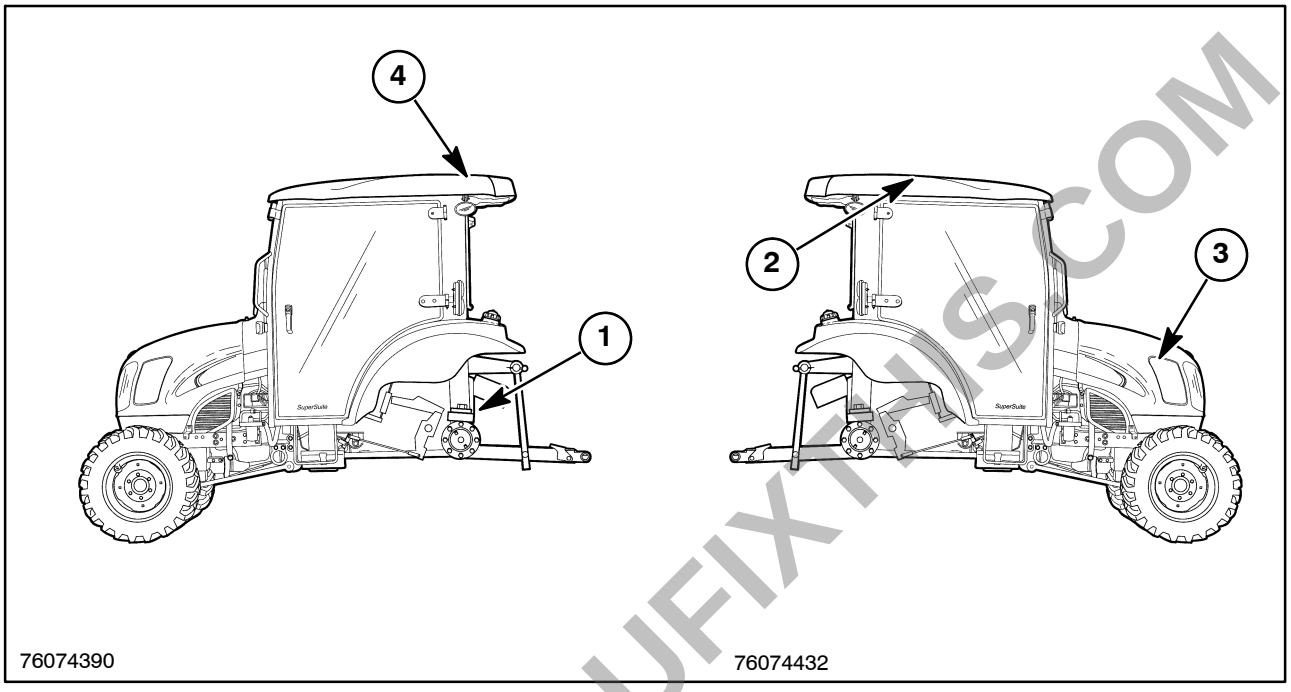

2

NO.	LUBRICATION & MAINTENANCE ITEMS	CHECK	CLEAN	LUBE	CHANGE	ADJUST	SERVICE INTERVALS
1	Windshield Washer Reservoir	X					Every 10 Hours or Daily
2	Cab Air Filter		X				
3	A/C Condenser		X				
4	A/C System	X					
2	Cab Air Filter				X		Seasonal

NOTE: *To check A/C System, turn on and make sure system operates properly.*

PREVIEW - YOUFIXTHIS.COM

Download full manual at youfixthis.com

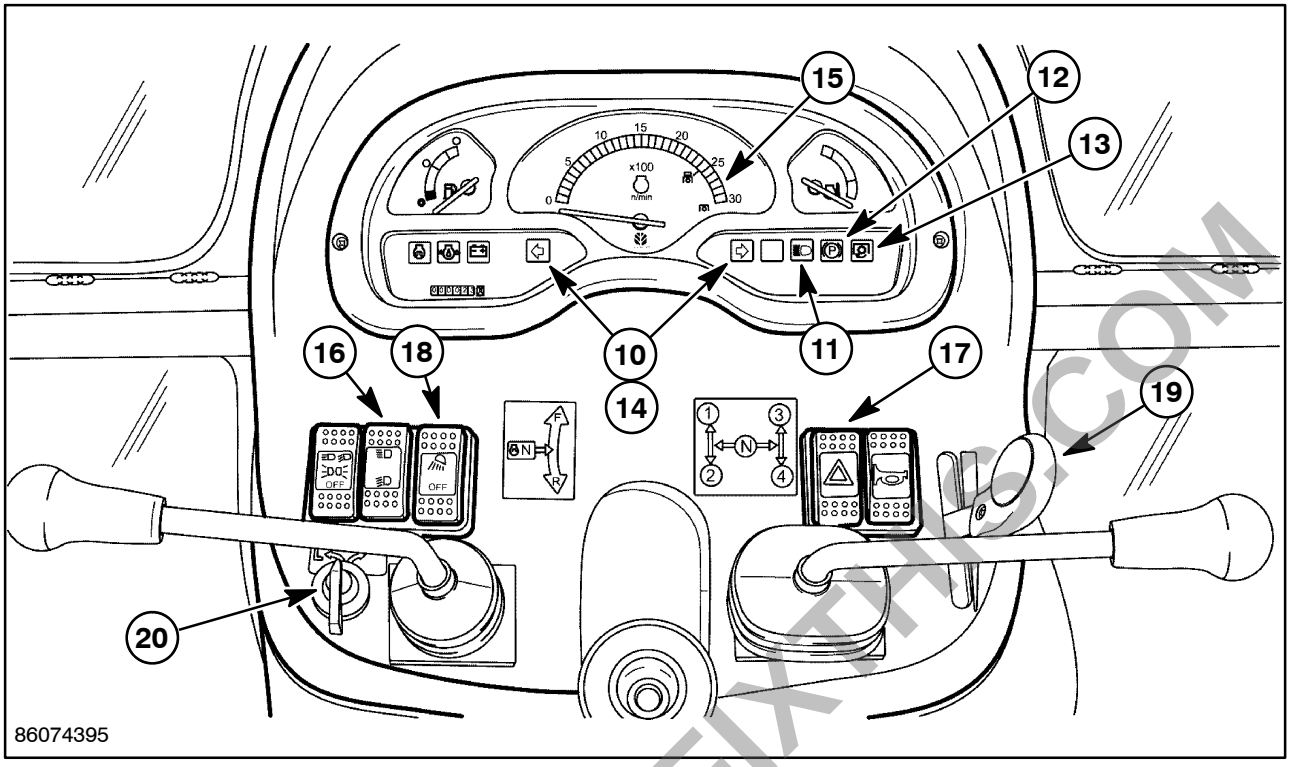

6

10. **Flasher Warning Hazard Lights** - Operate when the flasher switch is turned on, regardless of the key switch position. Use the flasher warning lights and the SMV placard when traveling on public roads, day or night.
11. **High Beam Road Light Indicator** - The light symbol will illuminate “Blue” when the light switch is placed in the (High Beam) position.
12. **Parking Brake Light** - Illuminates if the parking brake is engaged when the key switch is turned from the “OFF” position.
13. **PTO “On” Indicator** - When either of the PTO positions is engaged, and the key switch is in the “ACC/RUN” or “START” position, this indicator will be illuminated amber.
14. **Turn Signal Lights** - Operate when the turn signal switch is moved forward for right turns (the RH arrow will flash) or rearward for left turns (the LH arrow will flash.) The key switch must be in the “ACC/RUN” or “START” position for the turn signals to operate.
15. **PTO Speed Indicator** - Determined by the position of the needle on the tachometer. The tachometer is marked to indicate 540 PTO RPM. If the needle registers above the 540 RPM mark, this indicates a dangerous over speed condition, and the engine RPM should be reduced immediately.
16. **Road Lights (High Beam) Switch –** The high beams will remain “OFF” with the switch in the rear position. With the switch placed in the front position, the high beams will be illuminated.

NOTE: *For high beams to be activated, the road light switch must be in the front position.*

17. **Flashing Hazard Warning Light Switch –** By pressing the red portion of the switch, the hazard lamps will be begin to blink regardless of the key switch position.
18. **Exterior Work Lamp Switch –** By pressing the green part of the switch to the first detent position, the front work lights will illuminate. Pressing the switch to the second detent position, the front and rear work lights will illuminate together. The key switch must be turned to the “ACC/RUN” positions.
19. **Hand Throttle –** Regulates the engine speed by means of a cable. When pushing up on the lever you increase engine speed, and pulling back on the lever will decrease engine speed.
20. **Turn Signal Switch -** The turn signal lights are activated by moving the turn signal switch, 1, to the left for left turns or to the right for right turns. The key switch must be in the “ACC/RUN” position for the turn signals to operate.

NOTE: *If the Flasher Warning (Hazard) lights are operated at the same time. The turn signal switch will cause the light for the opposite side of the turning direction to stop blinking.*

Download full manual at youfixthis.com

STEERING WHEEL

Adjusting the Steering Wheel

The tractor is equipped with an adjustable steering wheel which can telescope and tilt.

To telescope the wheel, turn the wheel hub, 1, counter-clockwise and raise or lower the steering wheel to the desired height. Then turn the hub clockwise to lock it into position.

NOTE: *When locking the hub into position, do not overtighten.*

To tilt the wheel, pull up on the lever, 2, and move the steering wheel fore or aft to the desired position. If the wheel is not held in position when the lever is raised, the steering wheel will spring to its most forward position. Use this feature to gain additional clearance when mounting and dismounting the tractor.

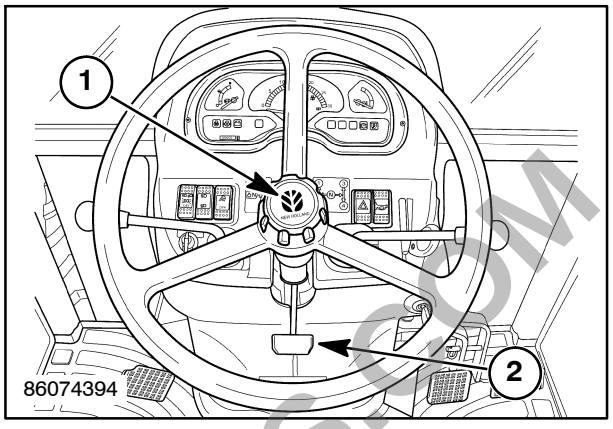

4

PREVIEW - YOUFIXTHIS.COM

Download full manual at youfixthis.com

MINIMUM HARDWARE TIGHTENING TORQUES

IN NEWTON-METERS (FOOT POUNDS) FOR NORMAL ASSEMBLY APPLICATIONS

INCH NON-FLANGED HARDWARE AND LOCKNUTS

NOMINAL SIZE	SAE GRADE 2		SAE GRADE 5		SAE GRADE 8		LOCKNUTS		NOMINAL SIZE
	UNPLATED or PLATED SILVER	PLATED W/ZnCr GOLD	UNPLATED or PLATED SILVER	PLATED W/ZnCr GOLD	UNPLATED or PLATED SILVER	PLATED W/ZnCr GOLD	GR.B w/GR5 BOLT	GR.C w/GR8 BOLT	
1/4	6.2 (55)*	8.1 (72)*	9.7 (86)*	13 (112)*	14 (121)*	18 (157)*	8.5 (75)*	12.2 (109)*	1/4
5/16	13 (115)*	17 (149)*	20 (178)*	26 (229)*	28 (250)*	37 (324)*	17.5 (155)*	25 (220)*	5/16
3/8	23 (17)	30 (22)	35 (26)	46 (34)	50 (37)	65 (48)	31 (23)	44 (33)	3/8
7/16	37 (27)	47 (35)	57 (42)	73 (54)	80 (59)	104 (77)	50 (37)	71 (53)	7/16
1/2	57 (42)	73 (54)	87 (64)	113 (83)	123 (91)	159 (117)	76 (56)	108 (80)	1/2
9/16	81 (60)	104 (77)	125 (92)	163 (120)	176 (130)	229 (169)	111 (82)	156 (115)	9/16
5/8	112 (83)	145 (107)	174 (128)	224 (165)	244 (180)	316 (233)	153 (113)	215 (159)	5/8
3/4	198 (146)	256 (189)	306 (226)	397 (293)	432 (319)	560 (413)	271 (200)	383 (282)	3/4
7/8	193 (142)	248 (183)	495 (365)	641 (473)	698 (515)	904 (667)	437 (323)	617 (455)	7/8
1	289 (213)	373 (275)	742 (547)	960 (708)	1048 (773)	1356 (1000)	654 (483)	924 (681)	1

NOTE: Torque values shown with * are inch pounds.

IDENTIFICATION
CAP SCREWS AND CARRIAGE BOLTS



SAE GRADE 2 SAE GRADE 5 SAE GRADE 8

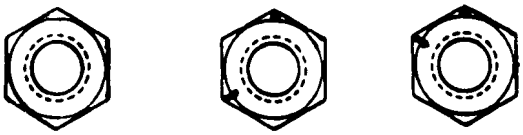

REGULAR NUTS SAE GRADE 5 HEX NUTS SAE GRADE 8 HEX NUTS

LOCKNUTS



GRADE IDENTIFICATION
GRADE A NO NOTCHES
GRADE B ONE CIRCUMFERENTIAL NOTCH
GRADE C TWO CIRCUMFERENTIAL NOTCHES



GRADE IDENTIFICATION
GRADE A NO MARKS
GRADE B THREE MARKS
GRADE C SIX MARKS
MARKS NEED NOT BE LOCATED AT CORNERS



GRADE A NO MARK
GRADE B LETTER B
GRADE C LETTER C

GRADE IDENTIFICATION

86529681 REV F 5.2

PREVIEW - YOUFIXTHIS.COM

Download full manual at youfixthis.com

PREVIEW ONLY

You're viewing 12 of 173 pages

The full manual includes:

- All 173 pages, complete
- Searchable PDF (find any keyword)
- No watermarks
- Instant download
- Print-ready quality

GET FULL MANUAL NOW

New Holland Boomer 4055, Boomer 4060 Operator Manual

Scan or click anywhere
youfixthis.com

Click anywhere on this page to get the full manual