Metric hex nuts and locknuts, Classes (CL) 05 and upward

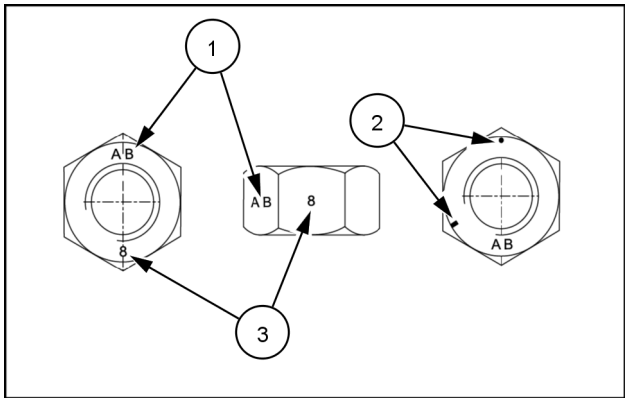

NHIL14RB00663AA 2

Metric hex nut identification markings

- **(1)** – Manufacturer's identification
- **(3)** – Property class
- **(2)** – Clockwise type markings indicate property class and may include manufacturer identification (if applied), Example: property marks **240°** apart (shown) at the eight o'clock position indicate a Class 8 property, and marks **300°** apart at the ten o'clock position indicate a Class 10 property.

Torque tightening sequence

NOTICE: *Shown below is the suggested initial torque tightening sequences for general applications, tighten in sequence from item 1 through to the last item of the hardware.*

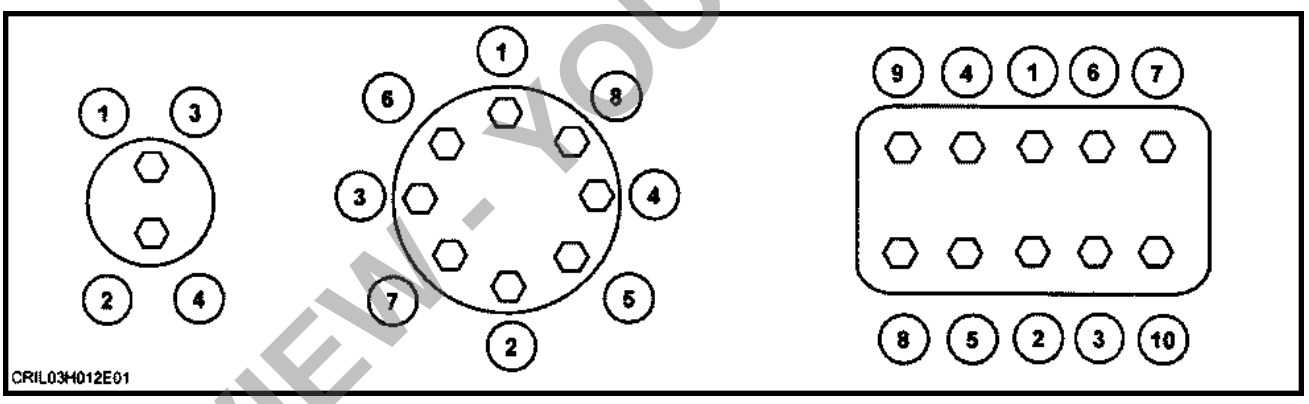

DF5019-1 3

PREVIEW - YOUFIXTHIS.COM

Download full manual at youfixthis.com

Engine - Overview

CX7.80	APAC --- WE
CX7.90	APAC --- WE
CX8.70	APAC --- MEA --- WE
CX8.80	APAC --- MEA --- WE
CX8.90	APAC --- MEA --- WE

General overview

Item	Description
(1)	DOC
(2)	Engine
(3)	Cooling fluid reservoir
(4)	Cooling fan
(5)	Cooling system
(6)	Rotary dust screen
(7)	Air filter
(8)	Fuel reservoir
(9)	**DEF/AdBlue®** reservoir
(10)	SCR/CUC exhaust muffler

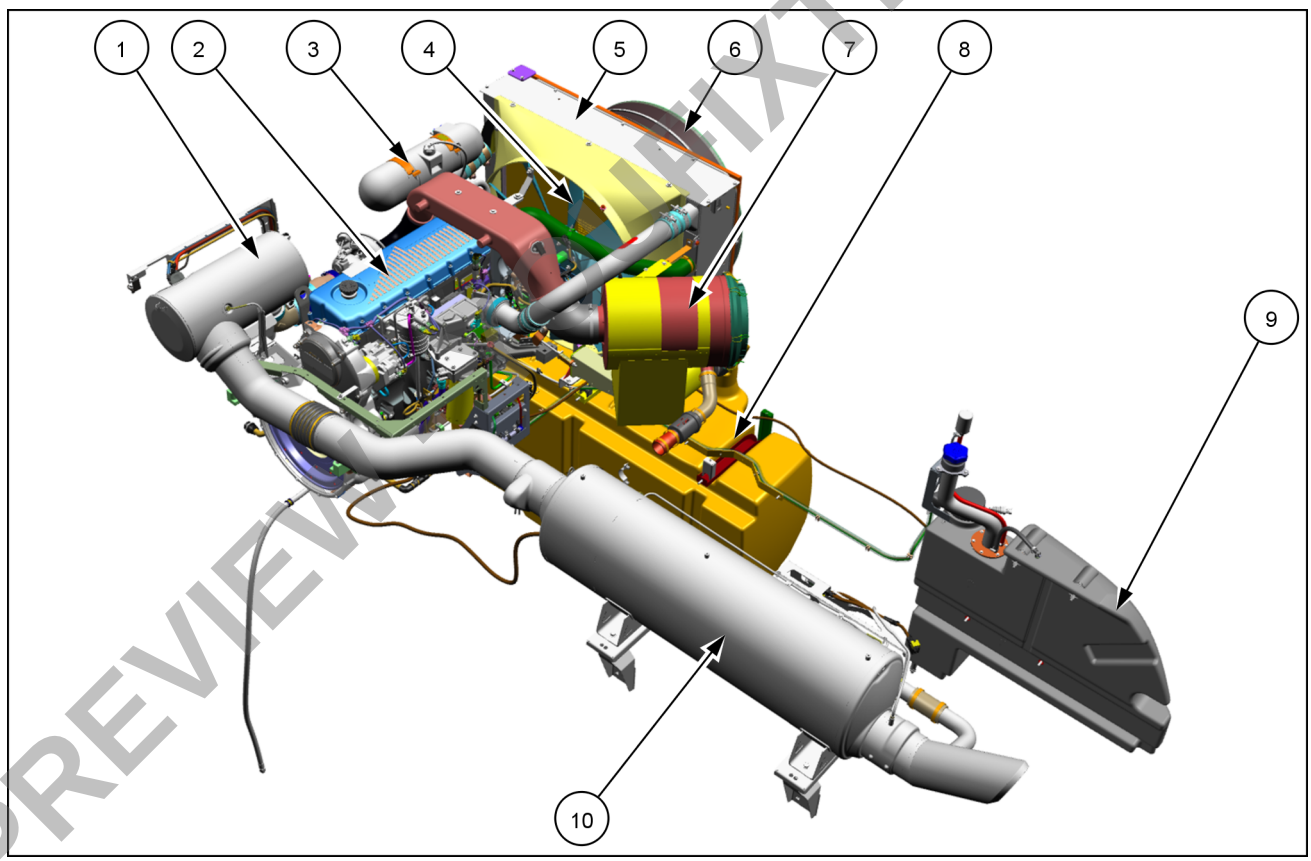

ZEVM19CXF0022TA 1

PREVIEW ONLY - YOUFIXTHIS.COM

Download full manual at youfixthis.com

10. Disconnect electrical connectors:
    - Combine speed sensor
    - Gear shift sensor
    - Gear shift motor

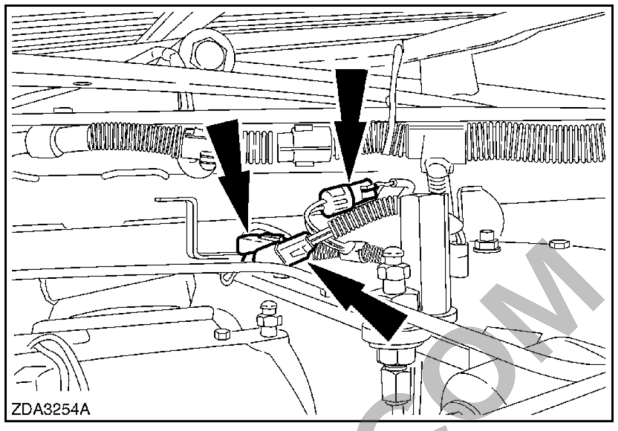

ZDA3254A 8

11. Install a suitable and safe support underneath the transmission. (e.g. a wooden pallet on a forklift)

12. Loosen two bolts **(1)** at left hand side of traction gearbox.

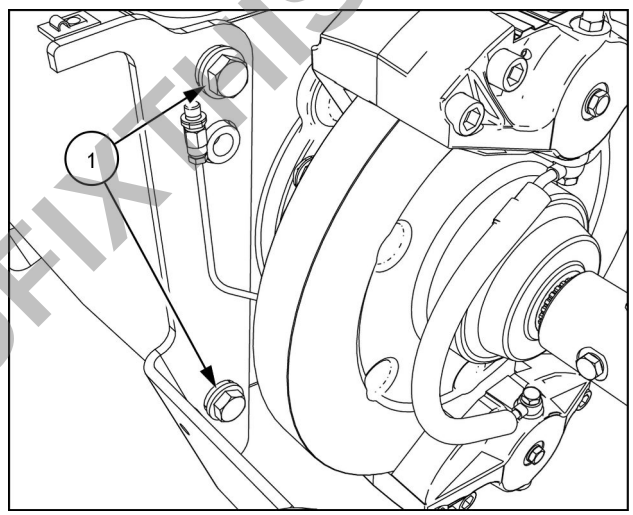

NHIL13CR00557AA 9

13. Loosen the two bolts **(1)** at right hand side of the transmission and remove.
    Lower the transmission and remove it from underneath the combine.

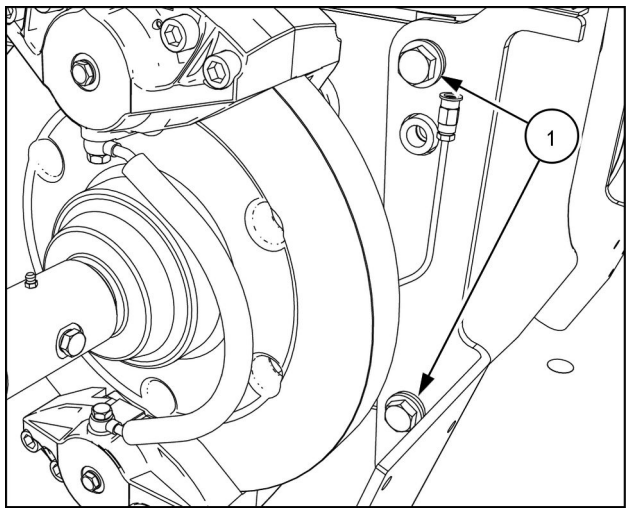

NHIL13CR00558AA 10

Next operation:
Mechanical transmission - Install (21.114)

PREVIEW - YOUFIXTHIS.COM

Download full manual at youfixthis.com

Final drive - Sectional view - Standard 11/111 final drive

CX7.80	APAC --- WE

(1) Seal
(2) Bushing
(3) Gear
(4) Cover
(5) Bearing
(6) Shim
(7) Hub cap
(8) Bolts
(9) Retaining ring
(10) O-ring
(11) Pinion cover
(12) Driving pinion
(13) Seal
(14) Bearing
(15) Bearing
(16) Pinion cover
(17) Bearing
(18) Wheel flange

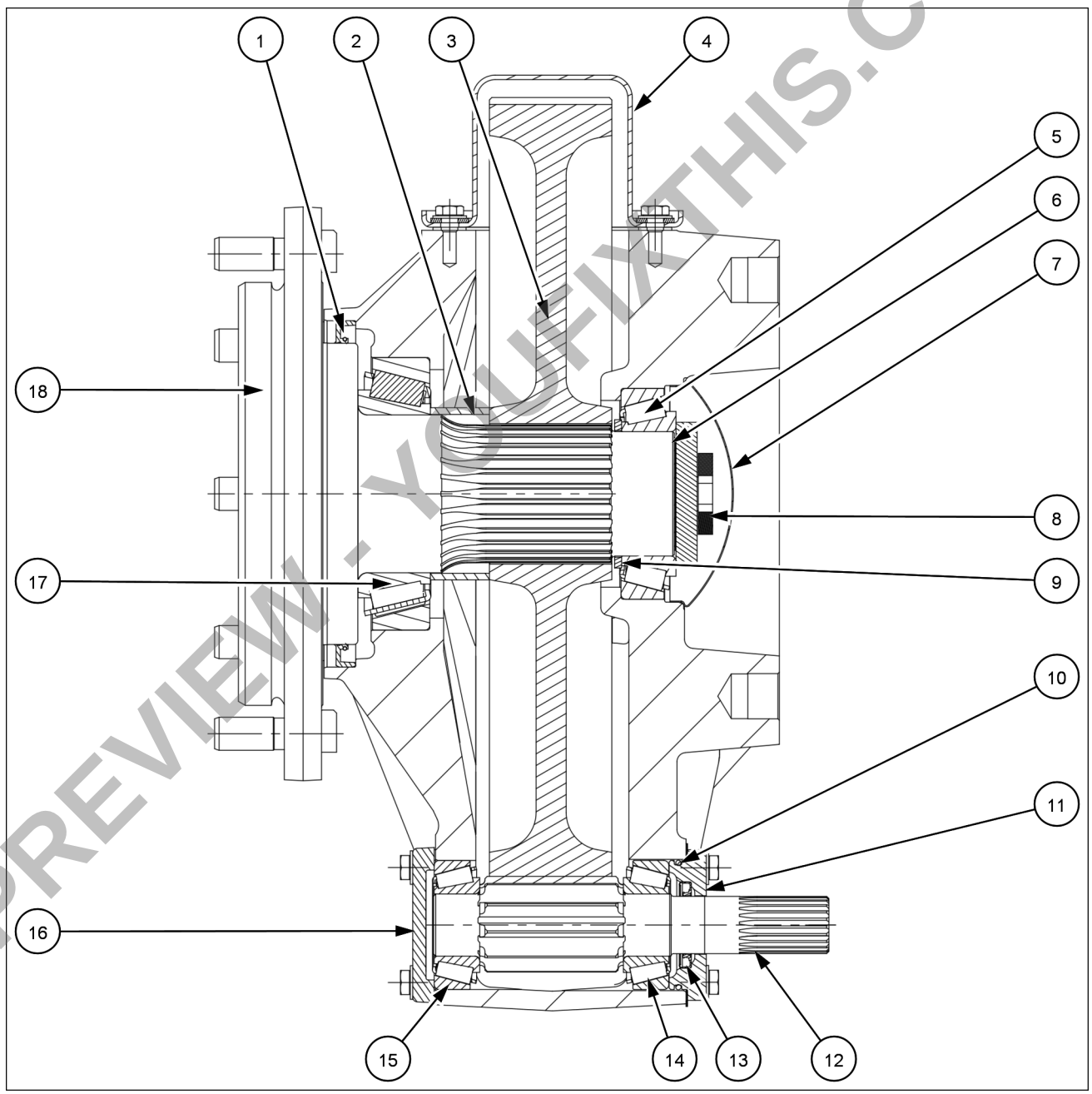

ZEIL18CXF0415GA 1

PREVIEW - YOUFIXTHIS.COM

Download full manual at youfixthis.com

Pump - Component identification - 115cc pump

CX7.80	APAC --- WE
CX7.90	APAC --- WE
CX8.80	APAC --- MEA --- WE

115cc pump (fixed cleaning shoe)

H1 P 115 L A G7 C2 N D4 G G3 NN L 42 L 42 A C 32 PN NNN G14

H1 P	H1 series pump, closed circuit
115	Maximum displacement **115 cm³/rev** (**7.02 in³/rev**)
L	Left hand (counterclockwise rotation)
A	Revision code
G7	Electronic Displacement Control (EDC) **12 V**
C2	Orifices **1.3 mm** (**0.051 in**) in servo supply 1 and 2
N	No displacement limiters
D4	Twin port- Code 62 metric 4 bolt flange - Integrated pressure filtration- Integrated Speed Limitation (ISL)
G	SAE D 4 bolt
G3	Input shaft: Splined shaft - 13 teeth - pitch 8/16
NN	No auxiliary mounting pad
L	Pressure Limiter (PL) + High Pressure Relief Valve (HPRV) both sides
42	High pressure setting port A: **420 bar** (**6090 psi**)Delta P
L	Pressure Limiter (PL) + High Pressure Relief Valve (HPRV) both sides
42	High pressure setting port B: **420 bar** (**6090 psi**)Delta P
A	Charge pump: **26 cm³/rev** (**1.6 in³/rev**)
C	Filtration special: full flow with dirt sensor and bypass 90° turned, without filter element
32	Charge pressure relief setting: **32 bar** (**464 psi**)
PN	CP 17 valve plate
NNN	Additional customer features: black paint and Sauer Danfoss name tag
G14	**140 bar** (**2030 psi**) brake pressure setting (ISL)

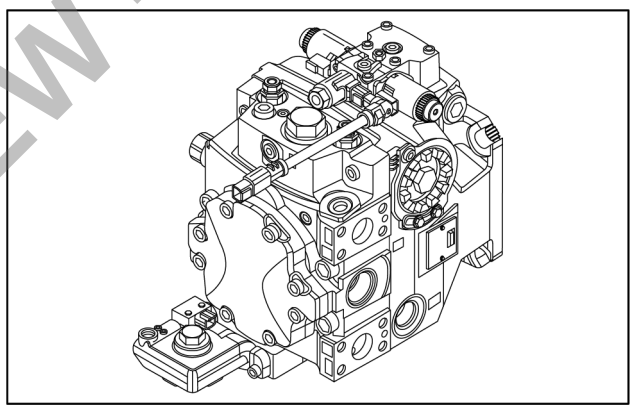

ZEIL18CXF0401AA 1

PREVIEW - YOUFIXTHIS.COM

Download full manual at youfixthis.com

4. Install brake line **(1)** between the upper and lower brake shoes and tighten the nipples to a torque of **15-20 Nm** (**11-19 ft.lbs**).
   Proceed the same on the other side.

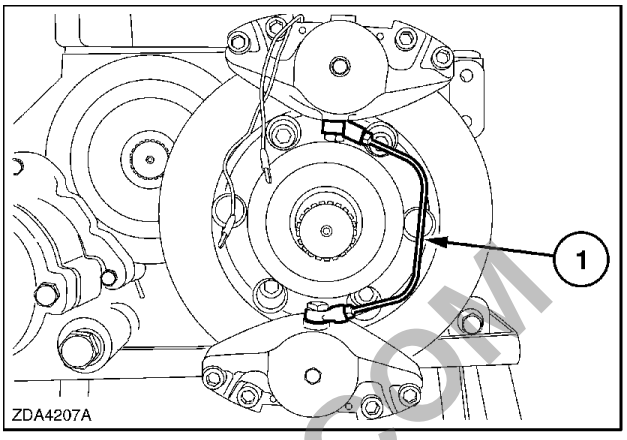

ZDA4207A 4

PREVIEW - YOUFIXTHIS.COM

Download full manual at youfixthis.com

Main valve block overview

Main valve block
• For the main valve block overview, see **Stacked control valves - Detailed view (35.359)**. • For a static description of the main valve block, see **Stacked control valves - Static description (35.359)**. • To remove the main valve block, see **Stacked control valves - Remove (35.359)**. • To install the main valve block, see **Stacked control valves - Install (35.359)**. • Electric components: o The header lower solenoid **Y-438** o The header raise solenoid **Y-437** o The header lift pressure **B-167** o The header height accumulator **Y-431** o The load sense solenoid **Y-443** o The unload in **Y-451** o The unload tube out **Y-452** o The rotor/drum inc solenoid **Y-453** o The rotor/drum dec solenoid **Y-454**

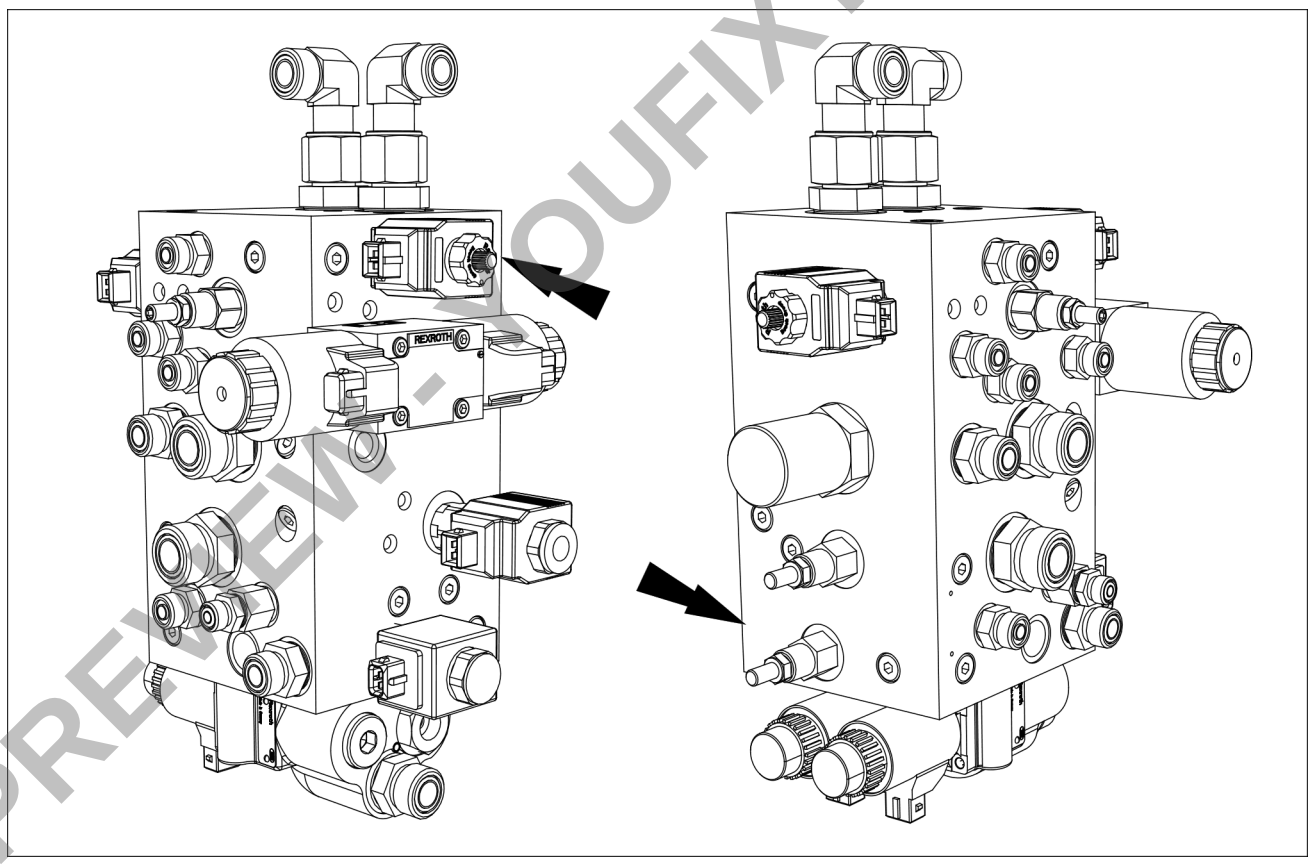

ZEIL18CXF0413FA 4

PREVIEW - YOUFIXTHIS.COM

Download full manual at youfixthis.com

Steering column - Assemble

CX7.80	APAC --- WE
CX7.90	APAC --- WE
CX8.70	APAC --- MEA --- WE
CX8.80	APAC --- MEA --- WE
CX8.90	APAC --- MEA --- WE

1. Position the two lower halves of the steering column covers just above the boot so that pins **(1)** are inside the covers.

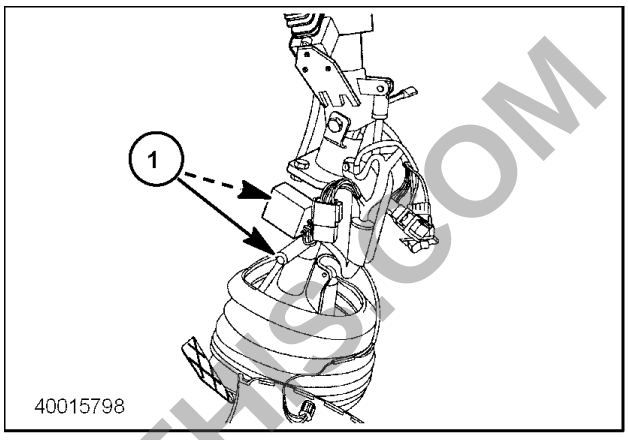

40015798_1489 1

2. Secure the lower covers to the columns with the screws.
3. Install the switches **(1)** into the cover halves.

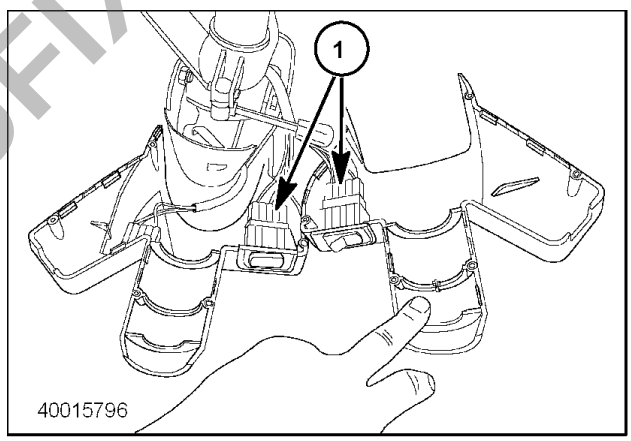

40015796 2

4. Install the upper cover halves using seven screws **(1)**.

NOTE: *Raise the steering wheel to gain access to the top screws.*

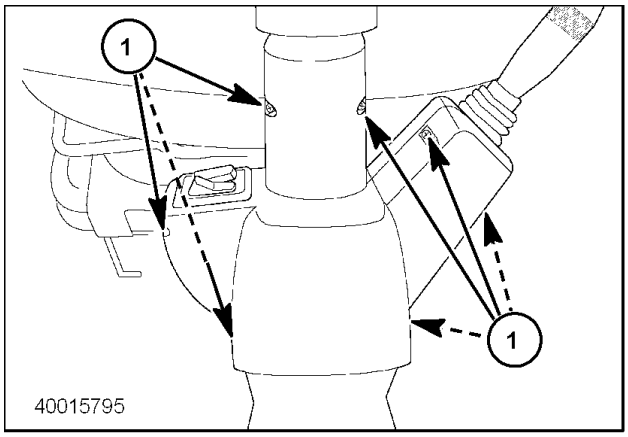

40015795_1491 3

PREVIEW - YOUFIXTHIS.COM

Download full manual at youfixthis.com

Air-conditioning condenser - Remove

Prior operation:
Evacuate the refrigerant from the system. See **Air conditioning - Service instruction (50.200)**.

1. Open the rotary dust screen door **(1)**.

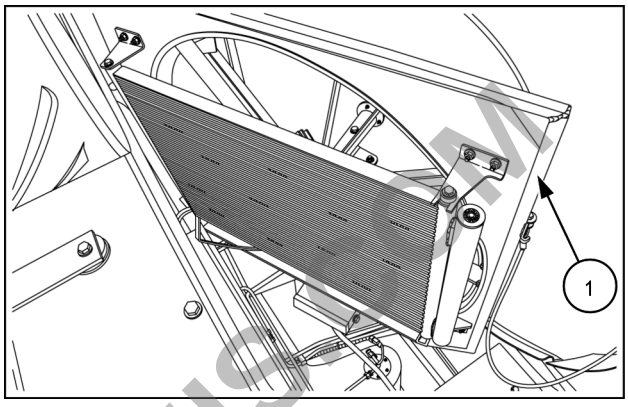

ZEIL18CR00656AA 1

2. Disconnect the refrigerant lines **(2)** from the condenser **(3)**. Remove the hex socket head screws **(4)**.

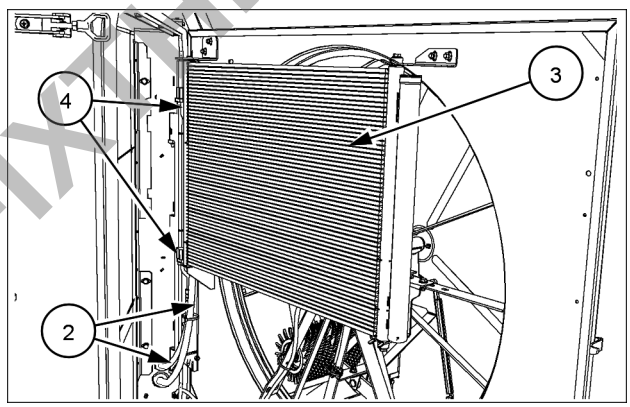

ZEIL19CXF0072AA 2

3. Remove the hardware **(5)** and remove the condenser **(3)**

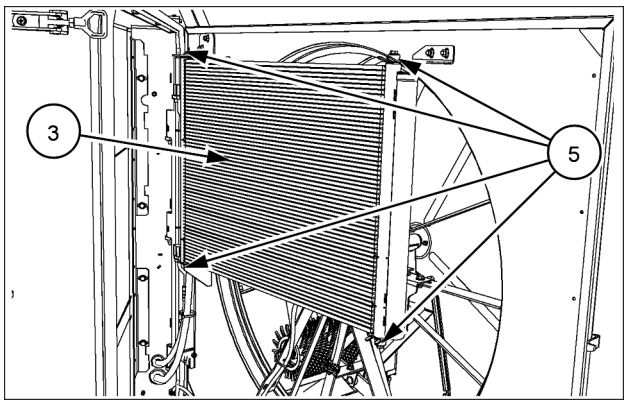

ZEIL19CXF0072AA 3

Next operation:
Receiver-dryer - Install (50.200).

PREVIEW - YOUFIXTHIS.COM

Download full manual at youfixthis.com

ELECTRONIC MODULES (CM's)

The electronic modules are the “black boxes" that provide control on many of the functions of the unit. These functions may vary according to the options that are fitted on the unit.
Inside these “black boxes" there is a processor, the "thinking part" of the module, and inside some of them there is one or more memories, which may allow the module to store calibration values, the configuration of the vehicle (which optional tools or devices have been installed) and the error codes.

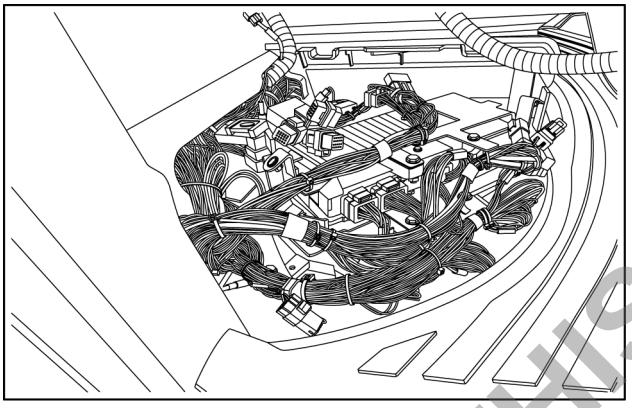

ZEIL14CR00102AA 19

A processor has a series of pins, which are electrical contacts. There are three main types of pins: for the inputs of the signals, for the outputs and for the processor supply.
The processor, the memories and the link between them form the hardware of the module, its "physical" part.
Then some software is needed, to handle the communication between the processor and the memories and to manage the various signals going into and out of the processor. The software is designed to operate in a different way for every module, and is called functional code.
The electronic modules are often blamed as responsible for most of the problems of the modern vehicles, while they are for certain among the most protected parts of the vehicle. In fact, the pins of the module are protected against spikes (high pulses) of current, and the signals are filtered by the hardware and by the software in input and in output to give the best handling of information.

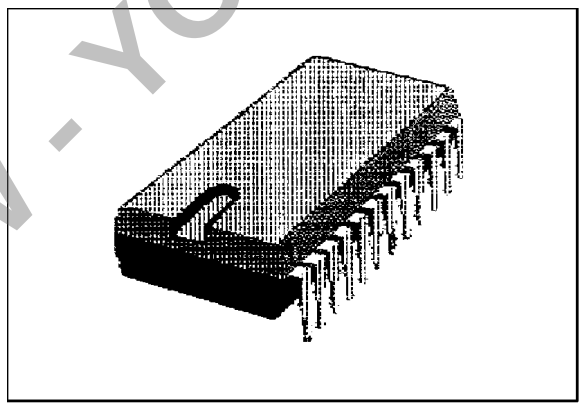

1Z0O2004112139 20

Electrical system - Special tools 1

CX7.80	APAC --- WE
CX7.90	APAC --- WE
CX8.70	APAC --- MEA --- WE
CX8.80	APAC --- MEA --- WE
CX8.90	APAC --- MEA --- WE

EUROPE ONLY

Description	Tool No.
Harness Repair Kit	**294070**
Test Probe Kit	**297448**

PREVIEW - YOUFIXTHIS.COM
Download full manual at youfixthis.com

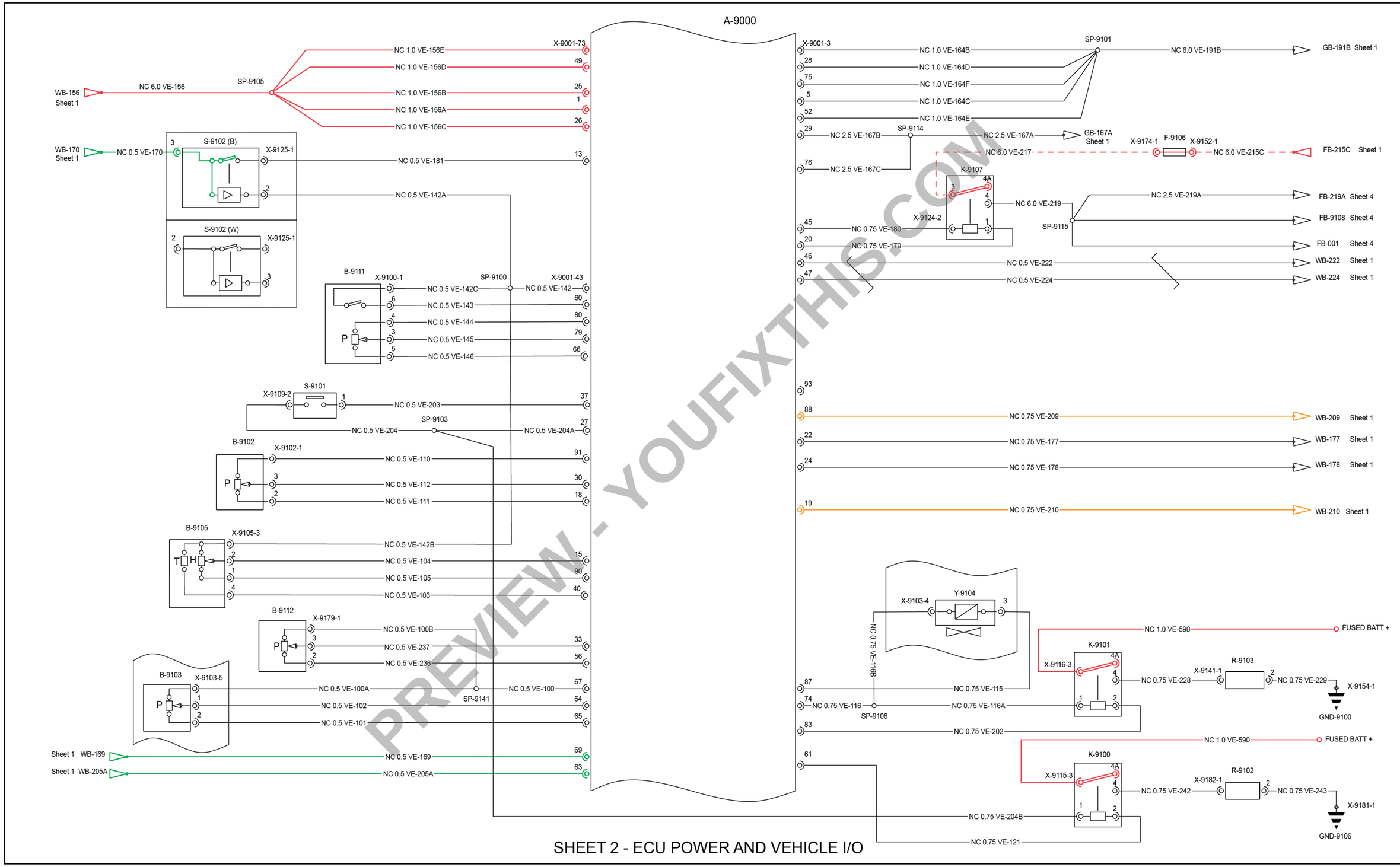

SHEET 2 - ECU POWER AND VEHICLE I/O

NHVE14ENG0413JA 1

PREVIEW - YOUFIXTHIS.COM

Download full manual at youfixthis.com

Engine starting system - Dynamic description Theory of operation - Starting/Charging system

CX7.80	APAC --- WE
CX7.90	APAC --- WE
CX8.70	APAC --- MEA --- WE
CX8.80	APAC --- MEA --- WE
CX8.90	APAC --- MEA --- WE

All the devices included in the starting and charging system

- Top battery

- Charged by the alternator.

- Provides power to the **12 V** the main combine electrical systems.

- Lower battery

- Charged by the P/S battery relay

- Provides power to the **24 V** electrical system, which consist of the starter circuit.

- Ignition switch

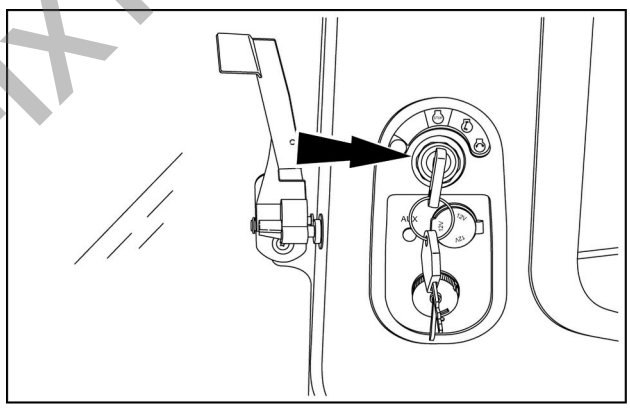

ZEIL14CR00059AA 1

- Battery disconnect switch

- Must be in ON position to jump start or charge batteries.

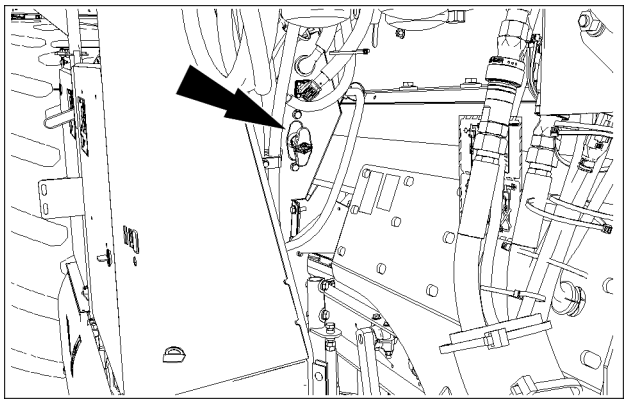

ZEIL18CR00295AA 2

PREVIEW - YOUFIXTHIS.COM

Download full manual at youfixthis.com

Mechanical limiter - Remove

CX7.80	APAC --- WE
CX7.90	APAC --- WE
CX8.70	APAC --- MEA --- WE
CX8.80	APAC --- MEA --- WE
CX8.90	APAC --- MEA --- WE

1. Open the left-hand side shield.

NOTE: *Refer to the operator's manual of the machine.*

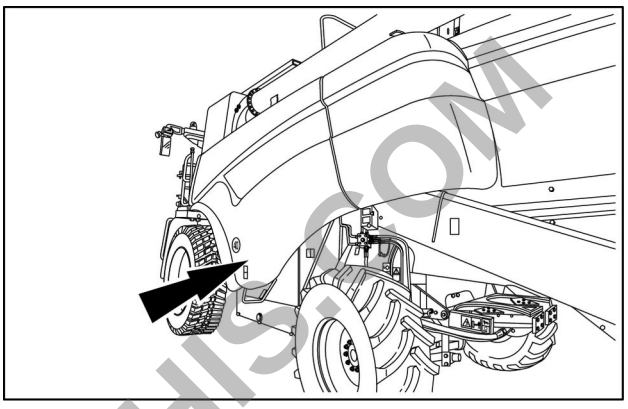

ZEIL14CXF0034AA 1

2. On the right-hand side of the variator, remove the bolts **(1)**, the washers **(2)** and the lock washers **(3)** from the bracket **(4)**.
3. Remove the bracket **(4)**.

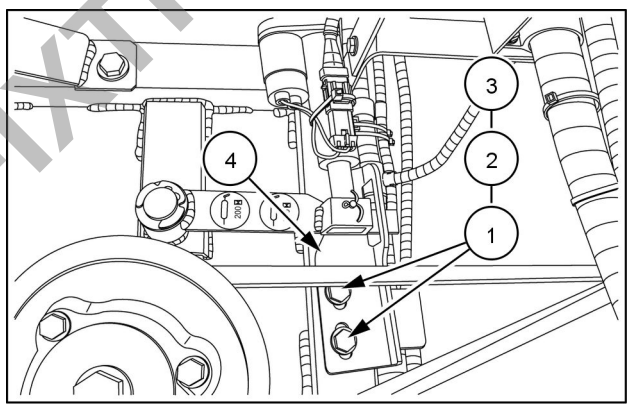

ZEIL14CXF0043AA 2

PREVIEW - YOUFIXTHIS.COM

Download full manual at youfixthis.com

Electrical systems - 55

FAULT CODES - DTC

CX7.80 Stage IV [5G2008000 -], CX7.90 Stage IV Tires [5H2008000 -], CX7.90 Stage IV Tracks [6H2008000 -], CX8.70 Stage IV [5J2008000 -], CX8.80 Stage V Tires [5K2008000 -], CX8.80 Stage V Tracks [6K2008000 -], CX8.90 Stage V Tires [5L2008000 -], CX8.90 Stage V Tracks [6L2008000 -]

PREVIEW - YOUFIXTHIS.COM

Download full manual at youfixthis.com

F-100-03 - Oil pressure sensor voltage is higher than expected

CX7.80	APAC --- WE
CX7.90	APAC --- WE
CX8.70	APAC --- MEA --- WE
CX8.80	APAC --- MEA --- WE
CX8.90	APAC --- MEA --- WE

Control Module: ECU

Context:
The Engine Control Unit (ECU) **A-9300** monitors the oil temperature and pressure sensor **B-9304** for a short to high source condition. If the ECU **A-9300** determines that a short to high source condition is present in the oil temperature and pressure sensor **B-9304** pressure signal circuit, this fault will occur. If this fault occurs, the oil pressure is frozen at the last valid value upon the preliminary failure and jumps to a default value of **1.00 bar** (**14.50 psi**) once the failure is validated.

Cause:
The ECU **A-9300** has detected a voltage greater than **4.93 V** for longer than **500 ms** in the oil temperature and pressure sensor **B-9304** pressure signal circuit.

Possible failure modes:

1. Faulty oil temperature and pressure sensor **B-9304** pressure signal wire, shorted to high source.
2. Faulty oil temperature and pressure sensor **B-9304**, internal failure.
3. Faulty ECU **A-9300**, software.

Solution:

1. Verify the fault is present and active.

   Use the operator display or the Electronic Service Tool (EST) to check the status of this fault.

   A. If the fault is present and active, continue with Step **2**.

   B. If the fault is no longer present or in an inactive state, the fault may be intermittent and not currently active. Continue with Step **5**.

2. Check the oil temperature and pressure sensor **B-9304** pressure signal circuit for a short to another circuit condition.

   Disconnect the engine (EN) harness from the oil temperature and pressure sensor **B-9304** at connector **X-9324**.

   Disconnect the engine (EN) harness from the ECU **A-9300** at connector **X-9306**.

   With the key switch **S-801** in the OFF position, use a multimeter to perform the following continuity checks :

From	To	Value
X-9306 (Plug) pin 31	All other pins in connector **X-9306**	There should be no continuity.

   A. If there is no continuity, leave the connectors disconnected and continue with Step **3**.

   B. If there is continuity, there is a short to another circuit condition in the engine (EN) harness between connector **X-9306 (Plug) pin 31** and connector **X-9324 (Receptacle) pin 4**, wire EN-631 VT. Locate and repair the shorted conductors.

3. Check the oil temperature and pressure sensor **B-9304** pressure signal circuit for a short to voltage condition.

   With the key switch **S-801** in the ON position, use a multimeter to perform the following voltage check :

From	To	Value
X-9306 (Plug) pin 31	Chassis ground	There should be no voltage.

Download full manual at youfixthis.com
PREVIEW - YOUFIXTHIS.COM

Index

Electrical systems - 55

FAULT CODES - DTC

A00## - Alarm Codes (*) 37
A00## - Alarm Codes (*) 47
ATC-111 - Cab sensor open or shorted to power (*) 63
ATC-112 - Cab sensor shorted to ground (*) 65
ATC-113 - Outlet temp sensor open or shorted to power (*) 67
ATC-114 - Outlet temp sensor shorted to ground (*) 69
ATC-115 - Evaporator sensor open or shorted to power (*) 71
ATC-116 - Evaporator sensor shorted to ground (*) 73
ATC-120 - Blower speed select pot open/shorted to power (*) 75
ATC-121 - Temperature select pot open/shorted to power (*) 77
ATC-122 - Mode Door potentiometer open circuit or shorted to power (*) 79
ATC-126 - High pressure switch (+) input shorted to ground (*) 81
ATC-127 - High pressure switch (-) input shorted to power (*) 83
ATC-129 - High pressure cycling error (*) 85
ATC-131 - Low pressure switch (+) input shorted to ground (*) 86
ATC-132 - Low pressure switch (-) input shorted to power (*) 88
ATC-134 - Low pressure switch open for > 1 minute (*) 90
E0001-03 - Grain Tank Covers Closed Sensor - Shorted to high source (*) 91
E0001-04 - Grain Tank Covers Closed Sensor - Shorted to low source (*) 93
E0001-05 - Grain Tank Covers Closed Sensor - Line disconnected (*) 95
E0014-03 - Hydraulic Reservoir Temperature Sensor - Shorted to high source (*) 97
E0014-04 - Hydraulic Reservoir Temperature Sensor - Shorted to low source (*) 99
E0021-03 - Clean Grain Elevator Speed Sensor - Shorted to high source (*) 101
E0021-04 - Clean Grain Elevator Speed Sensor - Shorted to low source (*) 103
E0021-05 - Clean Grain Elevator Speed Sensor - Line disconnected (*) 105
E0023-03 - Right Returns RPM Sensor - Shorted to high source (*) 107
E0023-04 - Right Returns RPM Sensor - Shorted to low source (*) 109
E0023-05 - Right Returns RPM Sensor - Line disconnected (*) 111
E0028-03 - Fuel Filter Switch - Shorted to high source (*) 113
E0031-03 - Hydrostat Motor Temperature Sensor - Shorted to high source (*) 115
E0031-04 - Hydrostat Motor Temperature Sensor - Shorted to low source (*) 117
E0031-05 - Hydrostat Motor Temperature Sensor - Line disconnected (*) 119
E0036-03 - Grain Tank Covers Open Sensor - Shorted to high source (*) 121

(*) See content for specific models

PREVIEW - YOUFIXTHIS.COM
Download full manual at youfixthis.com

Attachments/Headers generic sub-group - Overview

CX7.80	APAC --- WE
CX7.90	APAC --- WE
CX8.70	APAC --- MEA --- WE
CX8.80	APAC --- MEA --- WE
CX8.90	APAC --- MEA --- WE

General overview

General information
• For attachment compatibility, see “Attachment compatibility” **Attachments/Headers - Product overview (58)** in the operator’s manual. • For more information about counterweights, see “Counterweights” **Frame - Ballast (39.100)** in the operator’s manual. • For technical data, see “technical data” **Technical data (39.100)** in the operator’s manual. • For general specifications, see “General dimensions” **Frame - Dimension (39.100)** in the operator’s manual. • To attach a header, see “Attaching the header” **Feeder drive system - Install (60.150)** in the operator’s manual. • To detach a header, see “Detaching the header” **Feeder drive system - Remove (60.150)** in the operator’s manual. • For header related accessories, see “Feeding” **Frame - Component identification (39.100)** in the operator’s manual. • For the header attachment hydraulic schema, see **Hydraulic systems - Hydraulic schema (35.000)** Sheet 1a. ***NOTE:*** *For any further information relating specifically to headers, see the operator’s manual and the service manual of the header.*



ZEPH19CXF0011TA 1

PREVIEW - YOUFIXTHIS.COM

Download full manual at youfixthis.com

Threshing drum concave overview

Threshing drum concave - Animation



VIDEO_IMAGE 8

Threshing drum concave
• To adjust the concave clearance, see “Concave clearance” **Concave - Localization overview (66.105)** in the operator’s manual. • For the concave settings, see “Concave settings” **Concave - Adjust (66.105)** in the operator’s manual. • For the concave general specifications, see **Concave - General specification (66.105)**. • To remove the concave, see **Concave - Remove (66.105)**. • To install the concave, see **Concave - Install (66.105)**. • To adjust the concave closing plates, see **Concave closing plates - Adjust (66.105)**. • Concave electrical components: o Concave opening motor **M-633** o Concave clearance open/close switch **S-816**

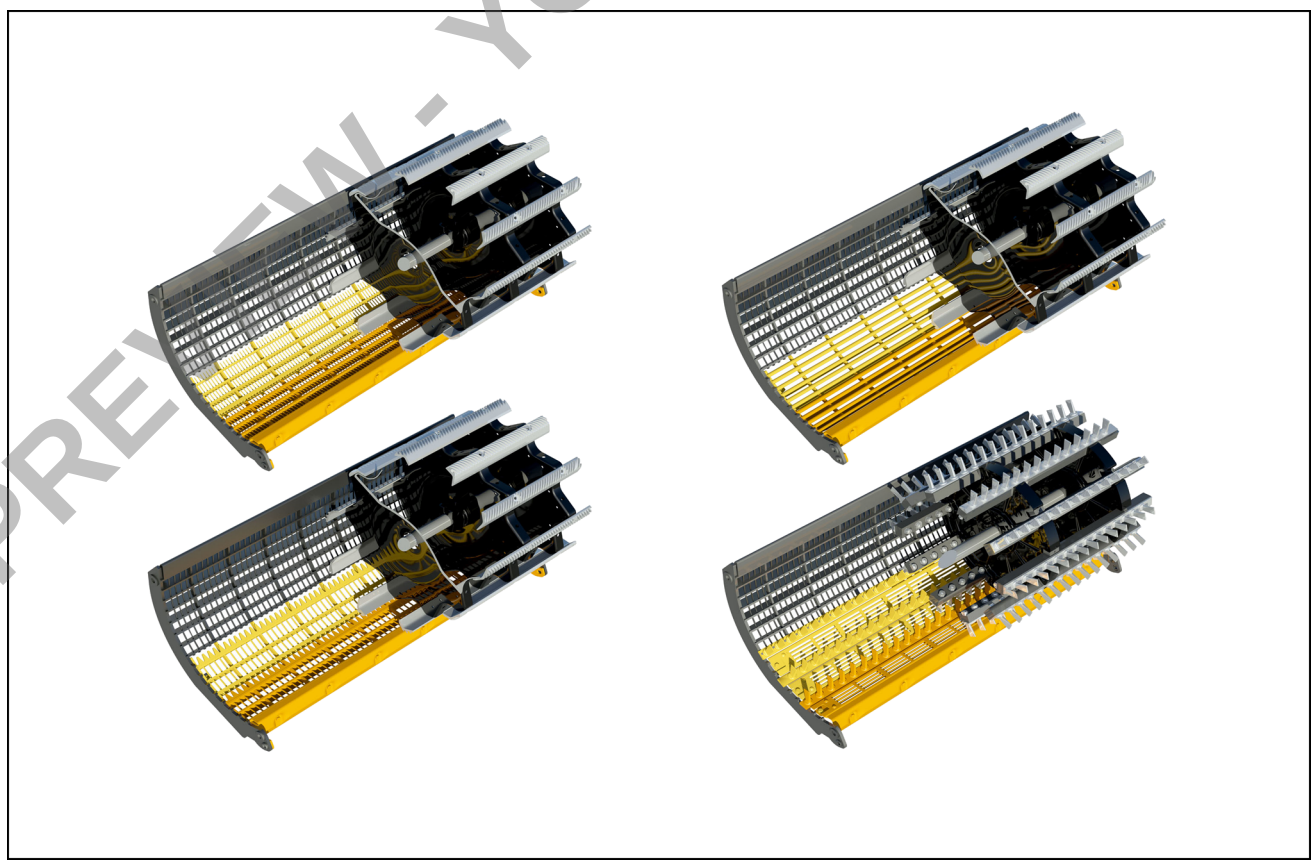

ZEPH18CXF0439TA 9

PREVIEW - YOUFIXTHIS.COM

Download full manual at youfixthis.com

Residue handling - Overview

CX7.80	APAC --- WE
CX7.90	APAC --- WE
CX8.70	APAC --- MEA --- WE
CX8.80	APAC --- MEA --- WE
CX8.90	APAC --- MEA --- WE

General overview

Item	Description
(1)	Straw walkers
(2)	Deflector plate
(3)	Swathing rake
(4)	Divider plates
(5)	Straw chopper
(6)	Chaff spreader
(7)	Chaff spreader deflector plate

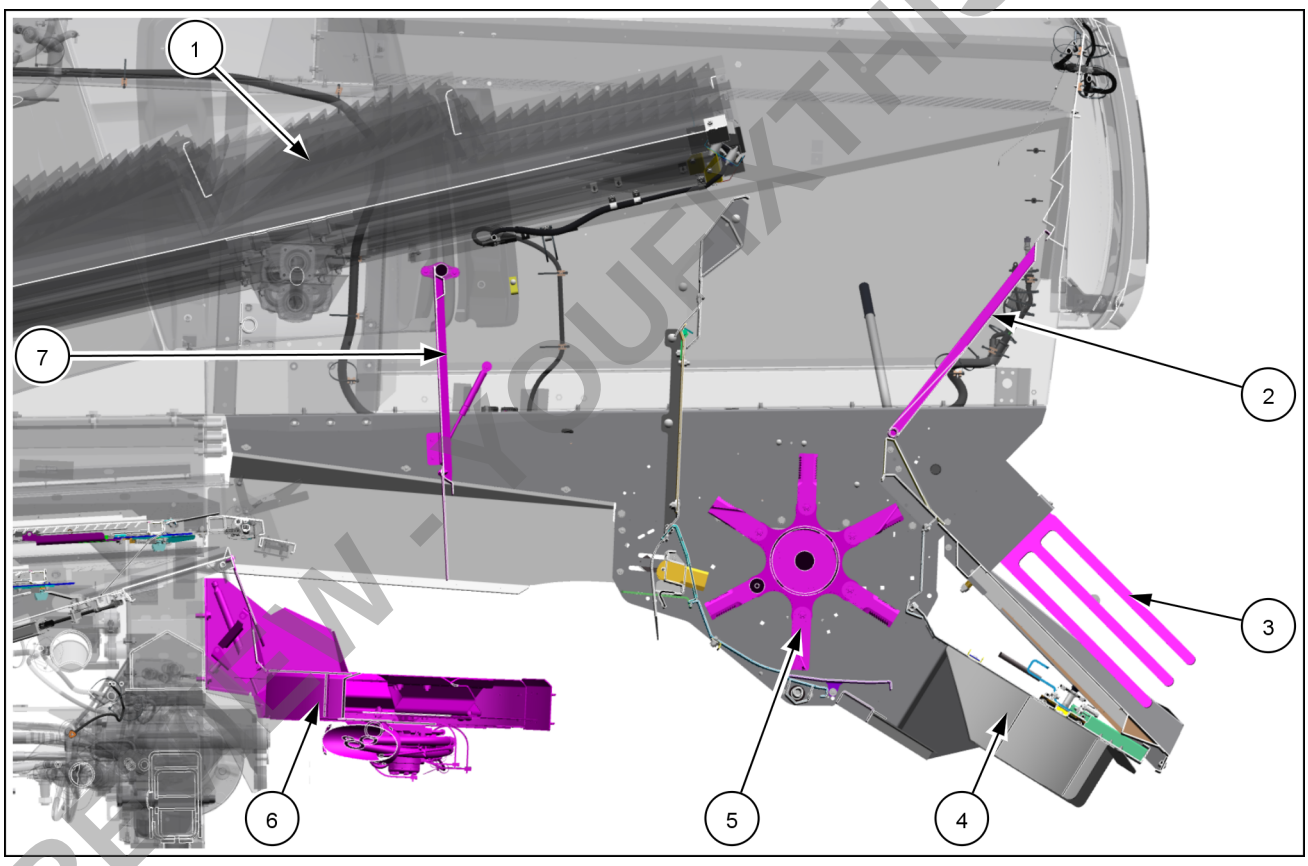

ZEVM18CXF0445TA 1

General
• For technical data, see “Technical data” **Technical data (39.100)** in the operator’s manual.
• For accessories, see “Straw handling” **Residue handling - Component identification (73)** in the operator’s manual.
• For maintenance, see “50 hours grease fittings” **Transmission - Grease (21)** in the operator’s manual.

PREVIEW - YOUFIXTHIS.COM

Download full manual at youfixthis.com

Cleaning - Work sheet Cleaning shoe adjustments

CX7.80	APAC --- WE
CX7.90	APAC --- WE
CX8.70	APAC --- MEA --- WE
CX8.80	APAC --- MEA --- WE
CX8.90	APAC --- MEA --- WE

Leveling frame adjustment

The leveling frame **(1)** should be in the middle and parallel in the lower main frame. The leveling frame is secured with the pivot pin **(2)** at the front.

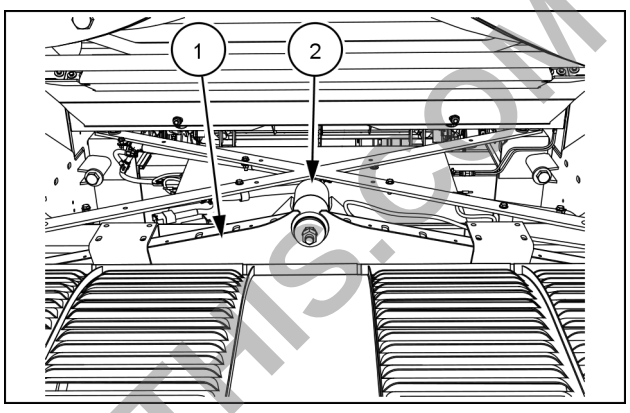

ZEIL17CR00061AA 1

The leveling frame **(1)** is secured with three rollers **(3)** at the rear.

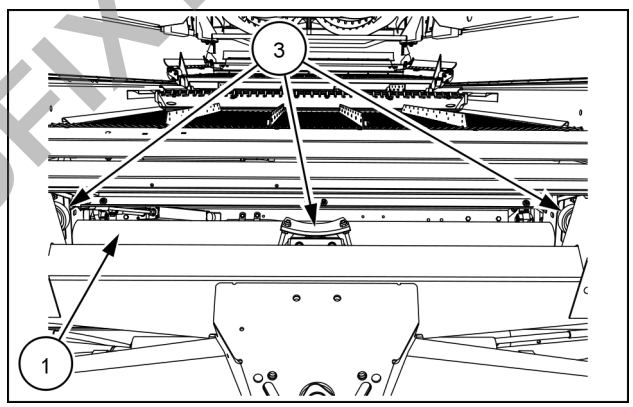

ZEIL17CR00062AA 2

The front pivot pin **(2)** must be installed with **LOCTITE® 8012 MOLY PASTE** in the cavities **(4)**. The clearance should be between **0.1 – 0.6 mm** (**0.004 – 0.024 in**). Add or remove shims **(7)** as required. Torque the inner nut **(5)** to **120 N·m** (**88.5 lb ft**). Torque the outer nut **(6)** to **250 N·m** (**184.4 lb ft**).

NOTE: *The clearance can be checked on an assembled machine by removing the grain pan assembly.*

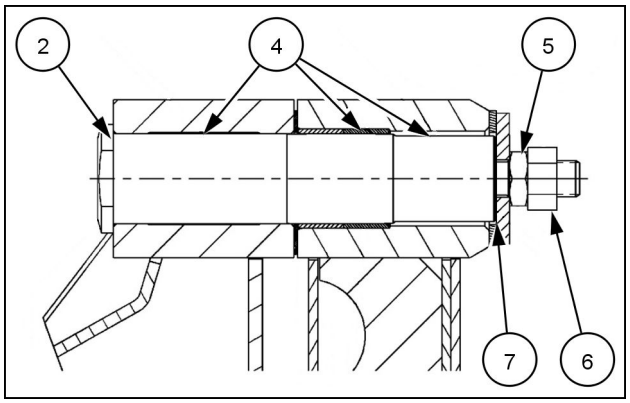

ZEIL17CR00059AA 3

PREVIEW - YOUFIXTHIS.COM

Download full manual at youfixthis.com

Crop storage / Unloading - Overview

CX7.80	APAC --- WE
CX7.90	APAC --- WE
CX8.70	APAC --- MEA --- WE
CX8.80	APAC --- MEA --- WE
CX8.90	APAC --- MEA --- WE

General overview

Item	Description
(1)	Grain tank
(2)	Unload tube
(3)	Yield sensor
(4)	Grain elevator drive
(5)	Grain elevator
(6)	Moisture sensor
(7)	Unload drive
(8)	Bubble-up

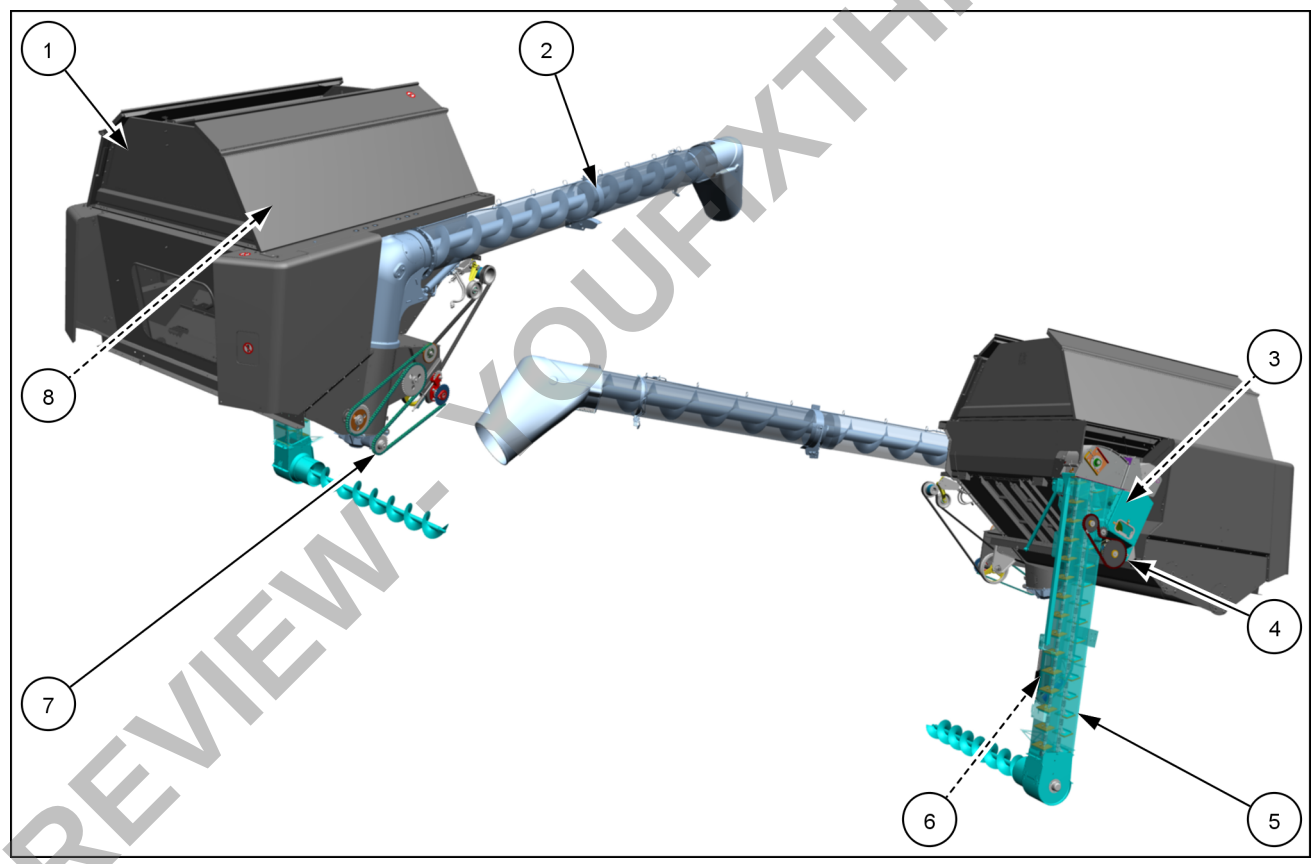

ZEVM18CXF0448TA 1

General information
• For General dimensions, see “General dimensions” **Frame - Dimension (39.100)** in the operator’s manual.

PREVIEW - YOUFIXTHIS.COM

Download full manual at youfixthis.com

SPECIAL TOOL INDEX

Genuine	Reference	PAGE
09405-1190 [Engine Lifting Hook]	Engine - Remove	10.2 / 15
09405-1190 [Engine Lifting Hook]	Engine - Remove	10.2 / 18
09405-1190 [Engine Lifting Hook]	Engine - Install	10.2 / 19
380000660 [Front Seal Ring Installer]	Main clutch - Disassemble	14.1 / 13
380000660 [Front Seal Ring Installer]	Main gearbox - Disassemble	14.1 / 43
380001074 [Ground Drive Transmission Nut Spanner Wrench (45mm)]	Drive shaft - Disassemble	21.3 / 17
380001074 [Ground Drive Transmission Nut Spanner Wrench (45mm)]	Drive shaft - Assemble	21.3 / 20
380001074 [Ground Drive Transmission Nut Spanner Wrench (45mm)]	Driven shaft - Disassemble	21.3 / 26
380001074 [Ground Drive Transmission Nut Spanner Wrench (45mm)]	Driven shaft - Assemble	21.3 / 29
380002596 [Final Drive Bearing Locknut Wrench -]	Final drive - Disassemble - Planetary final drive	25.1 / 30
380002596 [Final Drive Bearing Locknut Wrench -]	Final drive - Assemble - Planetary final drive	25.1 / 33
380002596 [Final Drive Bearing Locknut Wrench -]	Final drive - Assemble - Planetary final drive	25.1 / 37
293242 [Pressure Gauge 0-40 Bar]	Hydrostatic transmission - Special tools	29.5 / 3
293243 [Measuring Instrument]	Hydrostatic transmission - Special tools	29.5 / 3
293246 [Measuring Instrument]	Hydrostatic transmission - Special tools	29.5 / 3
292246 [Pressure Gauge Hose]	Hydrostatic transmission - Special tools	29.5 / 3
84021707 [Minimess Connector, Size EMA 3-9/16 in]	Hydrostatic transmission - Special tools	29.5 / 3
291924 [Hydraulic Test Quick Release Coupler]	Hydrostatic transmission - Special tools	29.5 / 3
380200116 [Cylinder Block Valve Retainer Tool]	Motor - Disassemble Powered Rear Axle	29.6 / 56
380200116 [Cylinder Block Valve Retainer Tool]	Motor - Disassemble Powered Rear Axle	29.6 / 58
380200112 [Split Ring Assembly Hood]	Motor - Disassemble Powered Rear Axle	29.6 / 59
380200114 [Axle Shaft And Bearing Press]	Motor - Disassemble Powered Rear Axle	29.6 / 59
380200112 [Split Ring Assembly Hood]	Motor - Assemble Powered Rear Axle	29.6 / 66
380200112 [Split Ring Assembly Hood]	Motor - Assemble Powered Rear Axle	29.6 / 67
380200112 [Split Ring Assembly Hood]	Motor - Assemble Powered Rear Axle	29.6 / 67
380200113 [Rotation Torque Tool]	Motor - Assemble Powered Rear Axle	29.6 / 67

Download full manual at youfixthis.com

PREVIEW - YOUFIXTHIS.COM

Contents

INTRODUCTION

Engine 10

[10.000] Engine 10.1

[10.001] Engine and crankcase 10.2

[10.216] Fuel tanks 10.3

[10.254] Intake and exhaust manifolds and muffler 10.4

[10.500] Selective Catalytic Reduction (SCR) exhaust treatment 10.5

[10.400] Engine cooling system 10.6

[10.414] Fan and drive 10.7

[10.418] Rotary screen 10.8

[10.450] Engine air compressor 10.9

Main gearbox and drive 14

[14.100] Main gearbox and drive 14.1

Transmission 21

[21.114] Mechanical transmission 21.1

[21.130] Mechanical transmission external controls 21.2

[21.145] Gearbox internal components 21.3

[21.182] Differential 21.4

Front axle system 25

[25.310] Final drives 25.1

Rear axle system 27

[27.124] Final drive hub, steering knuckles, and shafts 27.1

Hydrostatic drive 29

[29.000] Hydrostatic drive 29.1

[29.100] Transmission and steering hydrostatic control 29.2

[29.204] Reservoir, cooler, and lines 29.3

PREVIEW - YOUFIXTHIS.COM

Download full manual at youfixthis.com

X-1023R - AGR STEERING VALVES (47416268) (Receptacle)

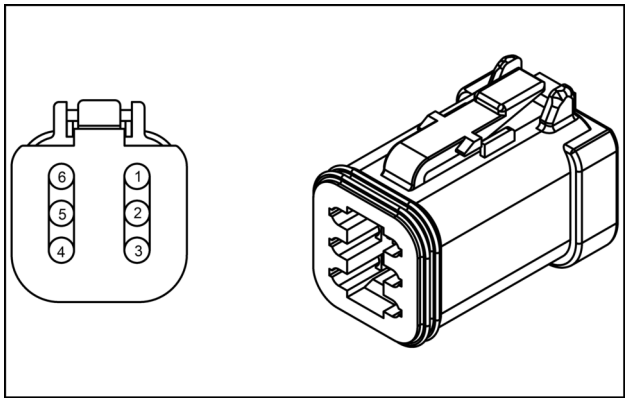

47416268 21

47416268

Pin	From	Wire	Description	Color-Size	Frame
1	SP-053K-P-X	CPL-053KC	CHASSIS GROUND	BK - 0.75	**SHEET 44 SH44 - UCM2: STEERING, NAVIGATION**
2	SP-053K-P-X	CPL-053KB	CHASSIS GROUND	BK - 0.75	**SHEET 44 SH44 - UCM2: STEERING, NAVIGATION**
3	**X-1021R (Receptacle) pin 21** - CAB FLOOR (87704522)	CPL-670	SOLENOID STEERING RIGHT	WH - 0.75	**SHEET 44 SH44 - UCM2: STEERING, NAVIGATION**
4	**X-1021R (Receptacle) pin 20** - CAB FLOOR (87704522)	CPL-667	SOLENOID STEERING LEFT	WH - 0.75	**SHEET 44 SH44 - UCM2: STEERING, NAVIGATION**
5	**X-1021R (Receptacle) pin 19** - CAB FLOOR (87704522)	CPL-666	SOLENOID STEERING ENABLE	WH - 0.75	**SHEET 44 SH44 - UCM2: STEERING, NAVIGATION**
6	SP-053K-P-X	CPL-053KA	CHASSIS GROUND	BK - 0.75	**SHEET 44 SH44 - UCM2: STEERING, NAVIGATION**

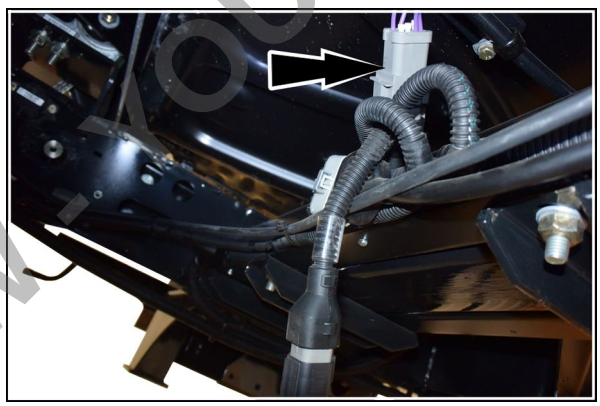

ZEPH17CXF0349PA 22

Under the cab.

PREVIEW - YOUFIXTHIS.COM

Download full manual at youfixthis.com

7. Visually inspect the relevant harnesses and connectors for damage, bent or dislocated pins, corroded terminals, or broken wires. Verify that the connectors are fully installed. Flex the harnesses involved to reveal intermittent breaks or shorts in the wiring concerned. Operate the machine while you monitor the display.

   A. If you find damage or the display indicates other than normal display readings, then repair the damage discovered during the inspection or locate and repair the other than normal display condition and verify that the error has been resolved.

   B. If you do not find damage and the display indicates only normal readings, then erase the fault code and continue operation.

Wiring harnesses - Electrical schematic sheet 28 (55.100)
Wiring harnesses - Electrical schematic sheet 48 (55.100)

PREVIEW - YOUFIXTHIS.COM

Download full manual at youfixthis.com

PREVIEW ONLY

You're viewing 25 of 6307 pages

The full manual includes:

- All 6307 pages, complete
- Searchable PDF (find any keyword)
- No watermarks
- Instant download
- Print-ready quality

GET FULL MANUAL NOW

New Holland CX7.80, CX7.90, CX8.70, CX8.80, CX8.90 Service Manual

Scan or click anywhere
youfixthis.com

Click anywhere on this page to get the full manual