REPAIR MANUAL

NEW HOLLAND

CX720
CX740
CX760
CX780
CX820
CX840
CX860
CX880

UFIXTHIS.COM

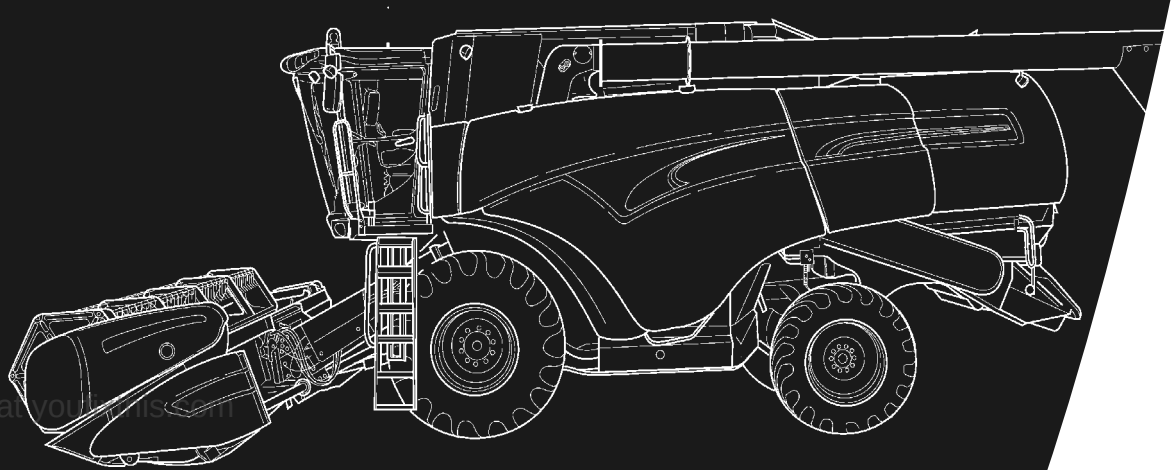

ual at yourfixthis.com

NEW HOLLAND

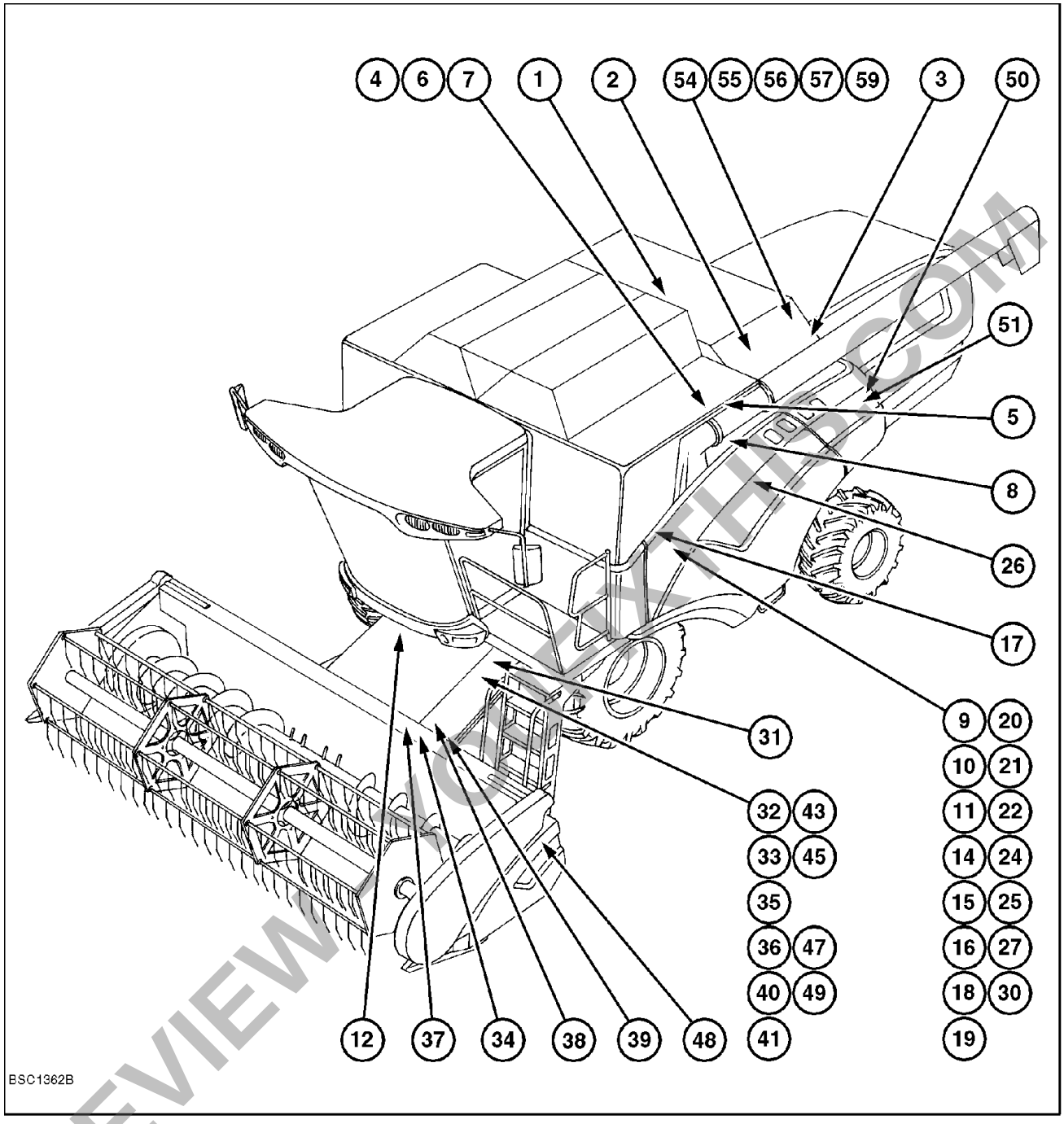

BSC1362B 1

HIGH PRESSURE SYSTEM - COMPONENT LOCATION

PREVIEW ONLY

Download full manual at youfixthis.com

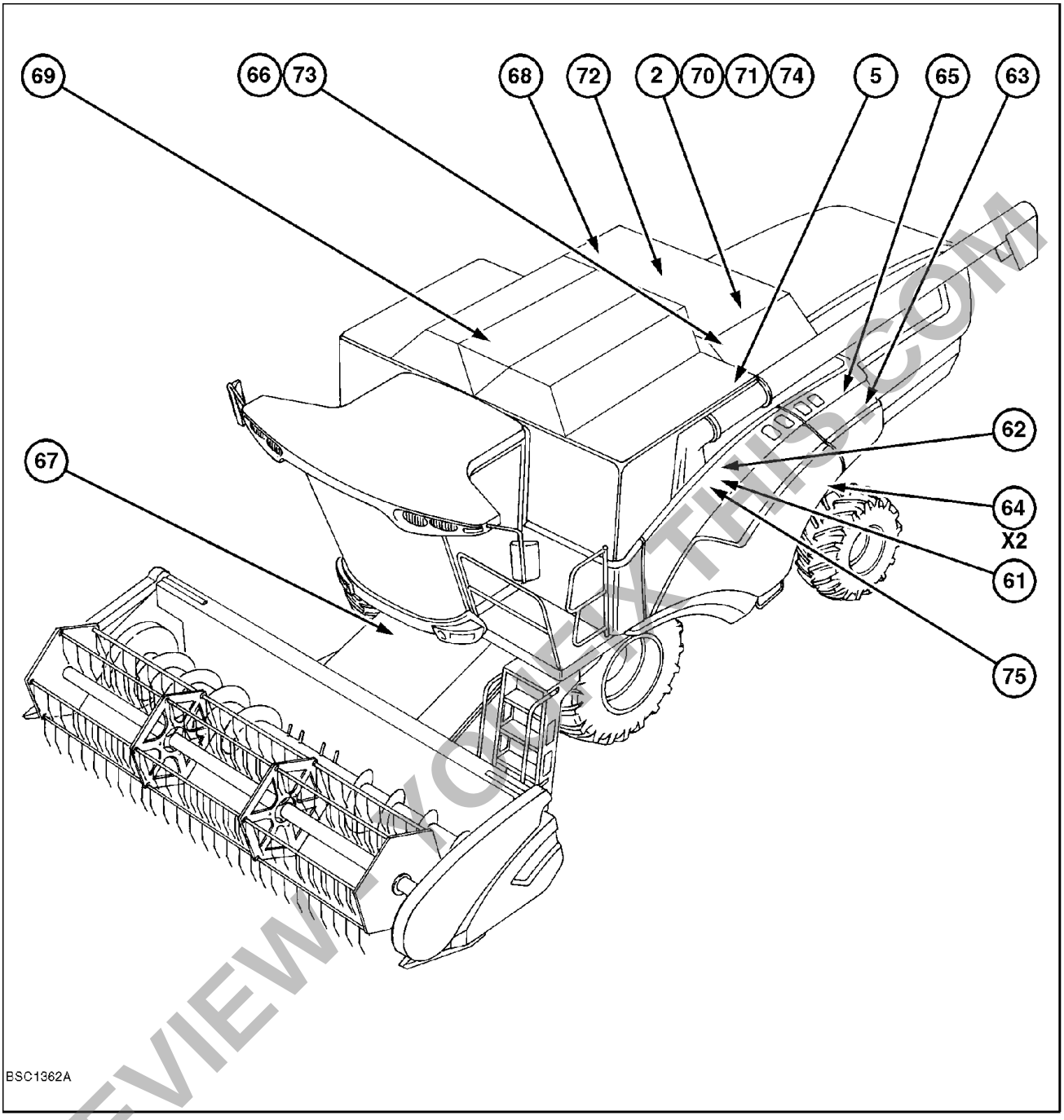

BSC1362A 1

(2) Engine Gearbox
Mounted onto the rear of the engine on the left hand side of the vehicle. Output from the engine directly drives the gearbox with subsequent drives to the Hydrostatic pump, CCLS and low pressure pump, main clutch and unloading mechanism clutch.

PREVIEW ONLY - YOUFIXTHIS.COM

Download full manual at youfixthis.com

4. Loosen and remove the four cylinder head bolts **(1)** evenly in a criss-cross pattern.

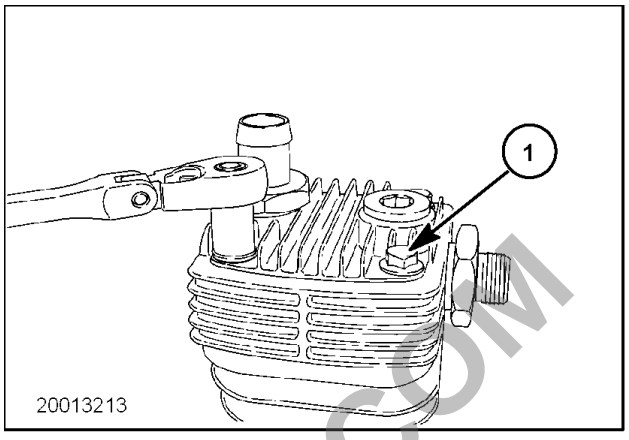

20013213 4

5. Carefully remove the cylinder head **(1)** from the compressor **(2)**.

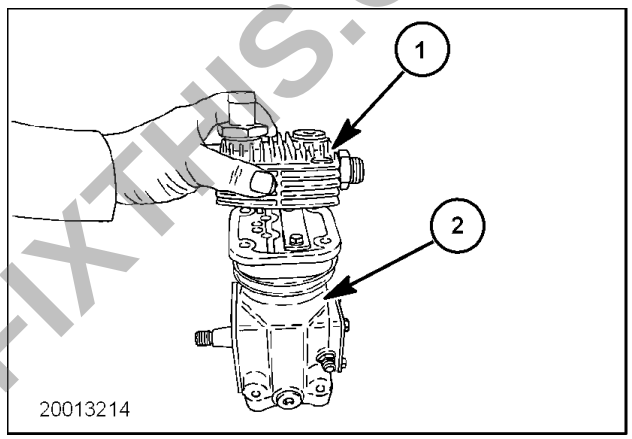

20013214 5

6. Loosen and remove the two bolts **(1)** and spacers **(2)**.

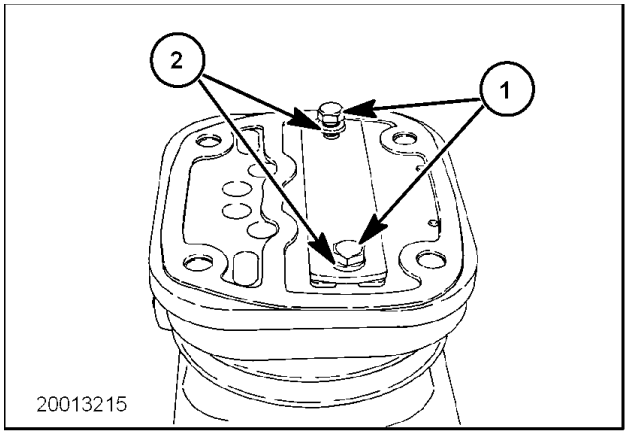

20013215 6

PREVIEW - YOUFIXTHIS.COM

Download full manual at youfixthis.com

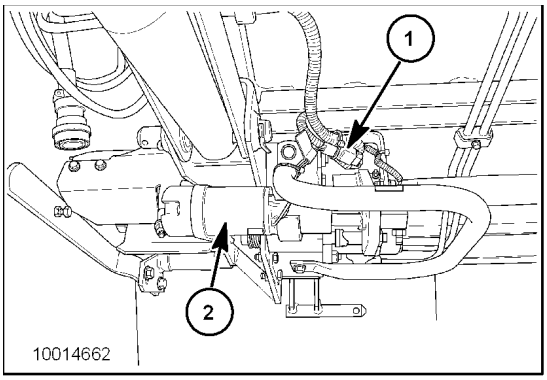

10014662 3

1. FV W/H, Connector X270 To Feeder Jog Forward Solenoid - L20
2. FV W/H, Connector X267 To Lateral Float CW Solenoid - L18
3. FV W/H, Connector X272 To Reel Fore Solenoid - L16
4. FV W/H, Connector X273 To Reel Up Solenoid - L14
5. FV W/H, Connector X266 To Feeder Jog Reverse Solenoid - L21
6. FV W/H, Connector X271 To Lateral Float CCW Solenoid - L19
7. FV W/H, Connector X268 To Reel Aft Solenoid - L15
8. FV W/H, Connector X269 To Reel Down Solenoid - L13
9. FV W/H, Connector X274 To Reel Drive Solenoid - L17

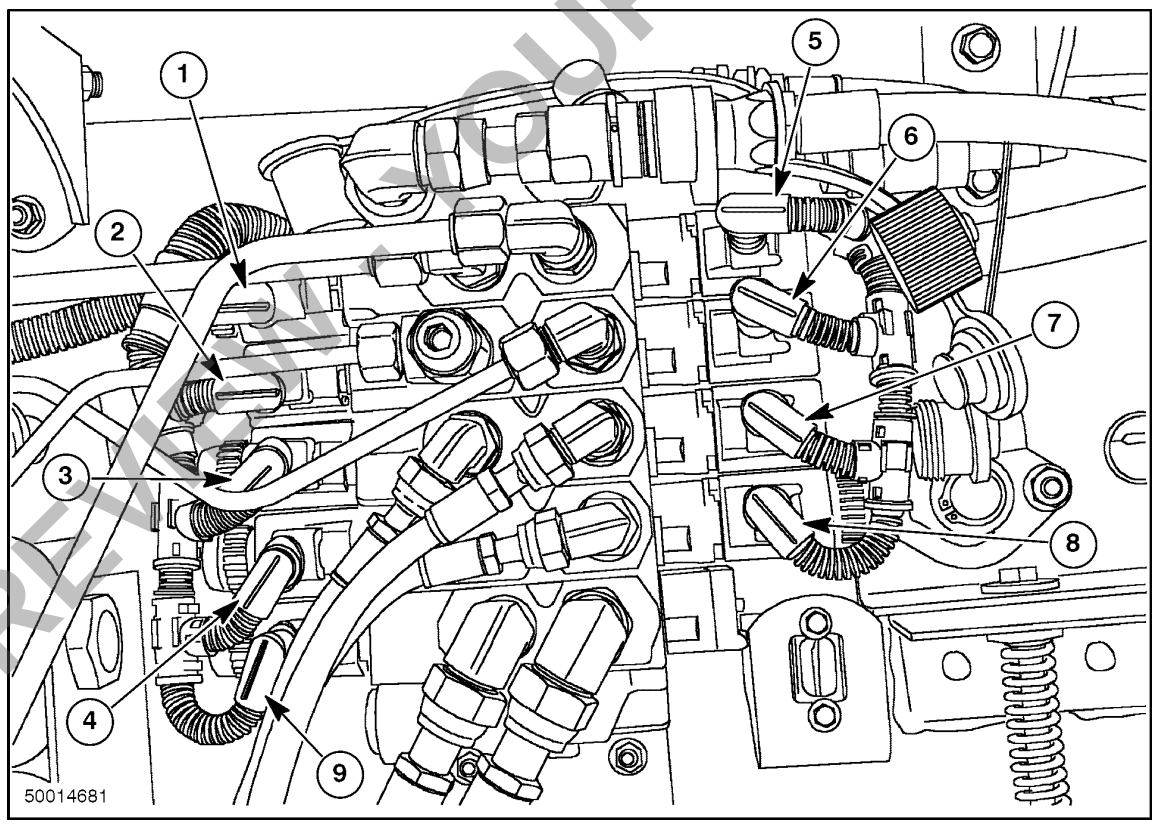

50014681 4

Feeder Valves

1. FF W/H To FE W/H, Connector X007 - Feeder
2. FF W/H To FV W/H, Connector X021 - Feeder Valves

PREVIEW - YOUFIXTHIS.COM
Download full manual at youfixthis.com

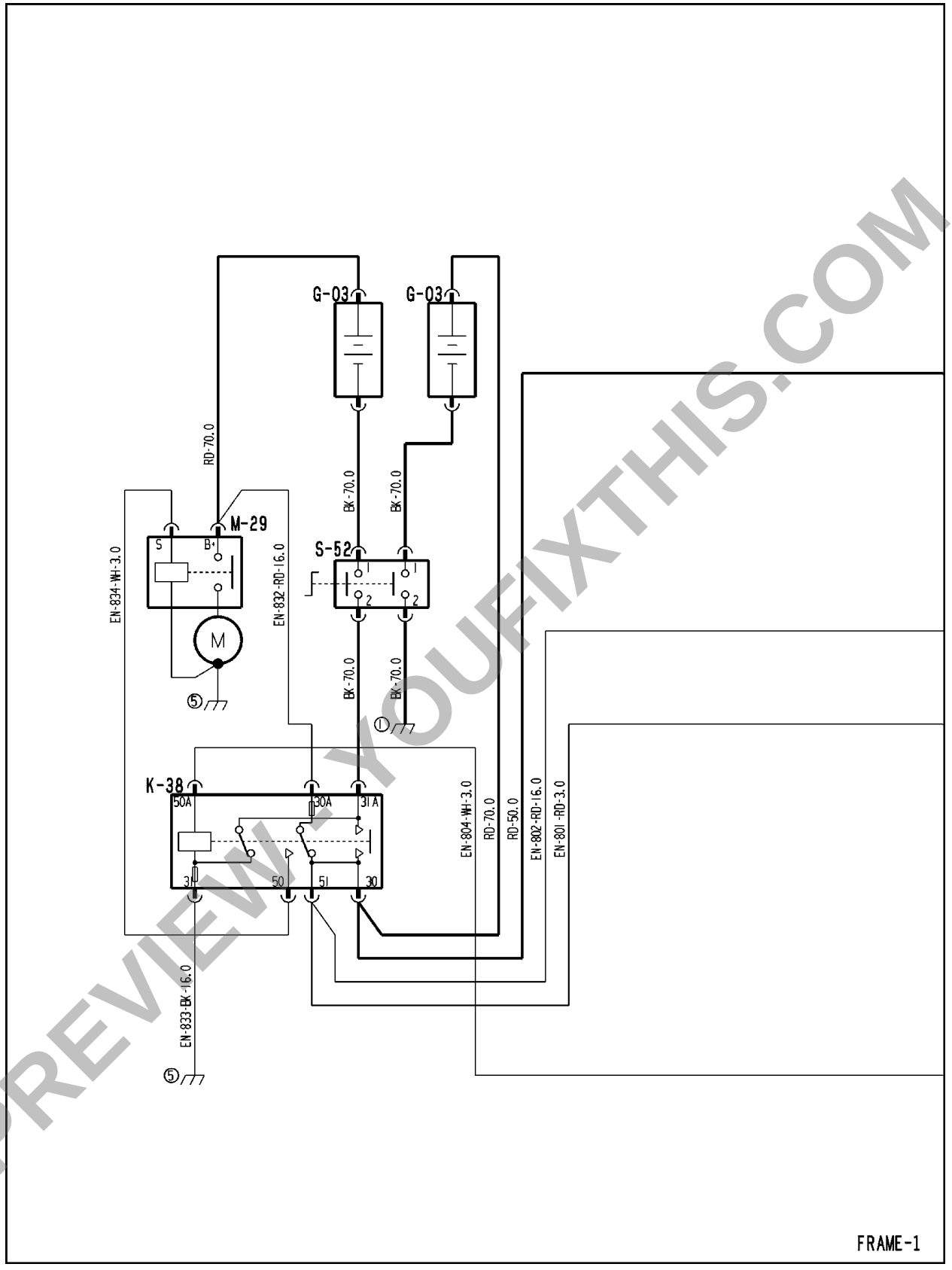

FRAME-1 1

PREVIEW - YOUFIXTHIS.COM

Download full manual at youfixthis.com

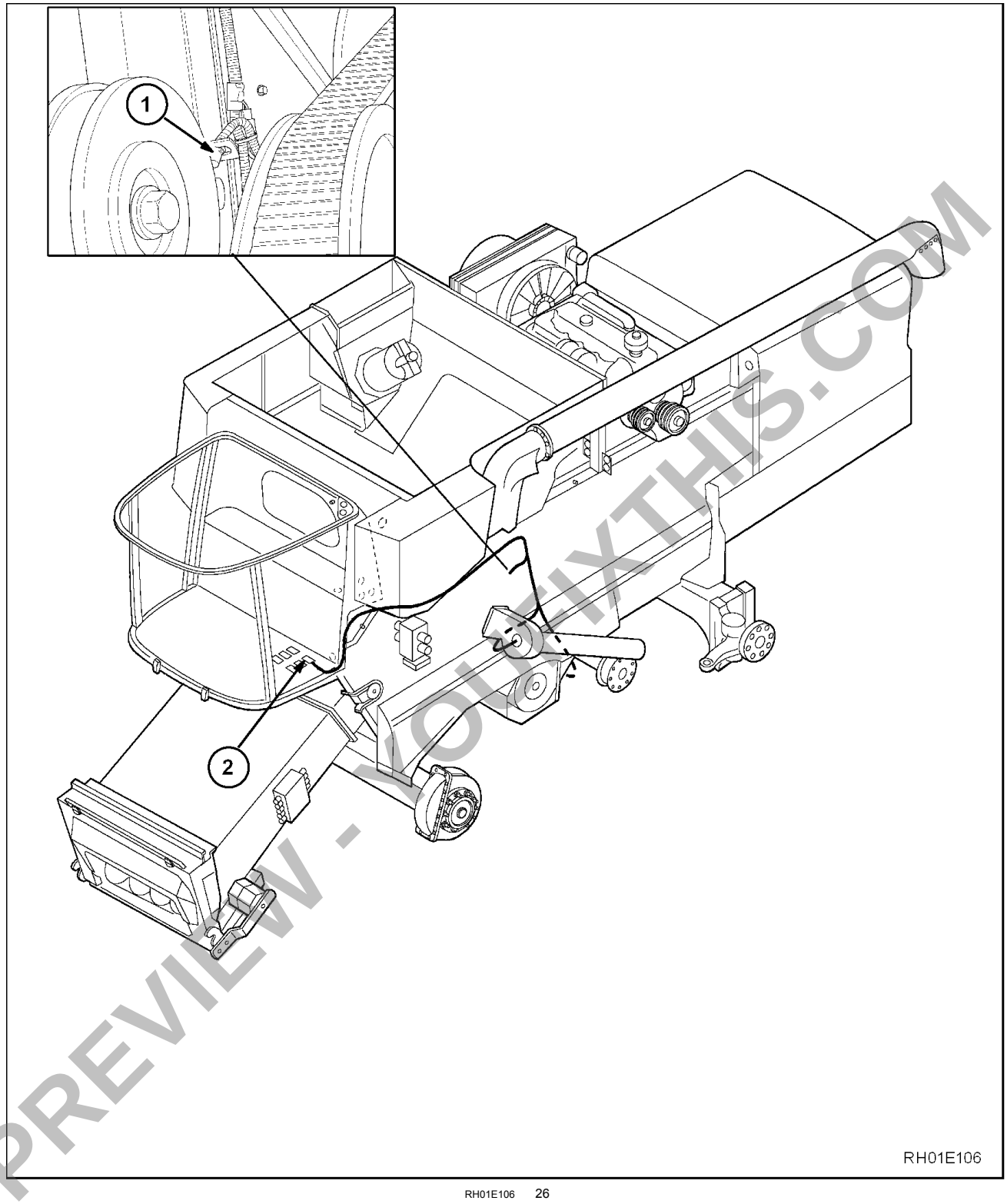

RH01E106 26

1. ROTARY SEPARATOR RPM SENSOR B04
2. CONNECTOR X019

PREVIEW - YOUFIXTHIS.COM
Download full manual at youfixthis.com

2. **ELECTRICAL TEST PROCEDURE 2: VOLTAGE MEASUREMENT OR SHORT TO POSITIVE SUPPLY VOLTS CONDITIONS FOR PERFORMING SHORT TO POSITIVE SUPPLY TESTS:**

1. Key switch ON (sometimes OFF, if specified in procedure).
2. Connectors at sensor, switch or potentiometer end disconnected. All other connectors must be reconnected to perform test.
3. Set meter to measure DC VOLTS, and measure circuit voltage as illustrated. Use the red meter lead to touch the connector pins, one pin at a time, and avoid contact with the case of metal connectors. Use the black lead to make contact with a plated metal part on the chassis such as a jump start post if fitted. Make sure the surface of the part is not corroded.
4. Determine if measured voltage falls within guidelines specified in the procedure.

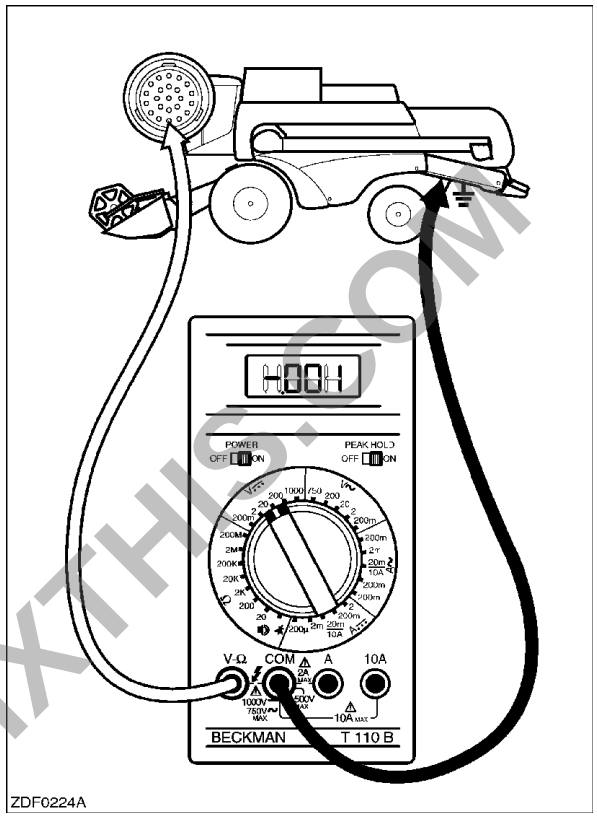

ZDF0224A

ZDF0225A 2

PREVIEW - YOUFIXTHIS.COM

Download full manual at youfixthis.com

NEW HOLLAND

DISTRIBUTION SYSTEMS - A

LIGHTING SYSTEM - 40.A

CX720 , CX740 , CX760 , CX780 , CX820 , CX840 , CX860 , CX880

PREVIEW - YOUFIXTHIS.COM

Download full manual at youfixthis.com

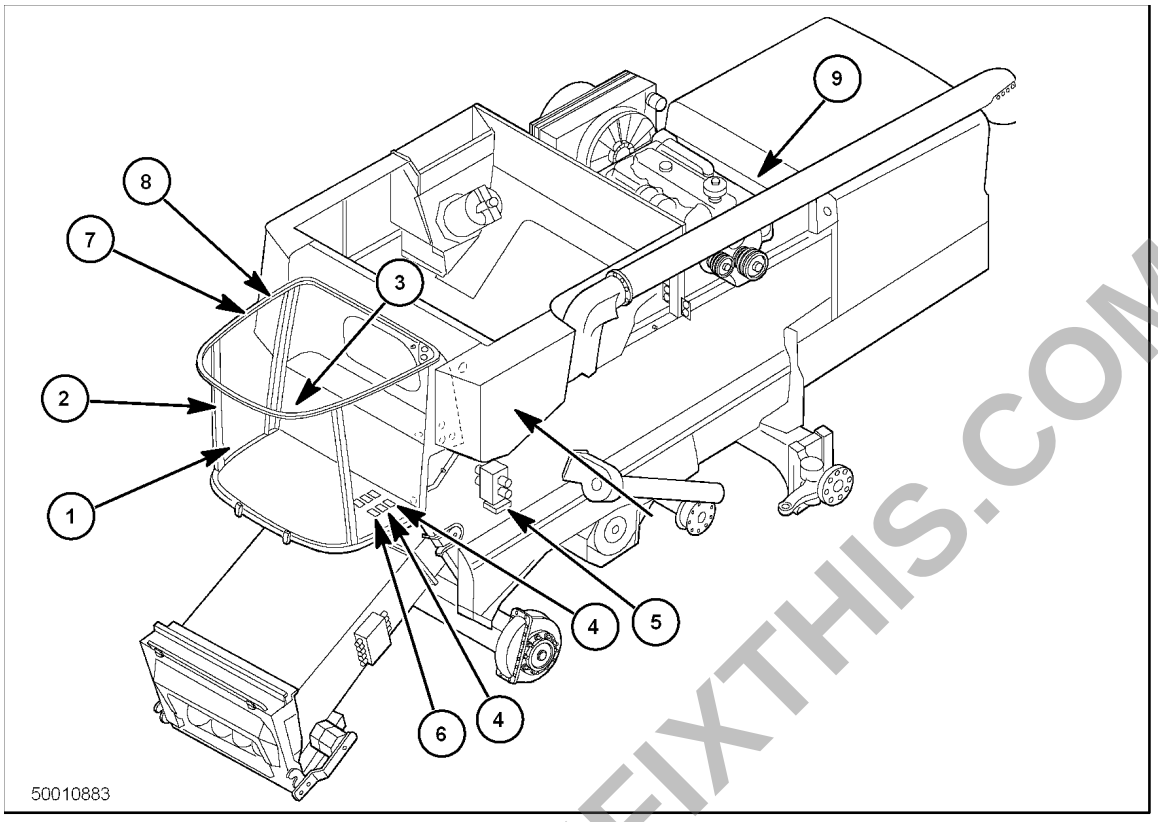

50010883 2

The CX combine is equipped with a minimum of 6 electronic modules, and may be equipped with as many as 10 modules, depending on the configuration and options installed. These modules are:

Main Display Module (MDM) **(1)** or InfoviewTM monitor; provides the main display of information for the operator.

Shaft Speed Monitor (SSM) **(2)** provides the display for shaft speed alarms, and for fuel level and coolant temp gauges.

Right Hand Module (RHM) **(3)** most operator inputs, including from the multi-function handle (MFH), are fed into this module, which then reports this information to the other modules in the network for action.

Chassis Control Module **(1)** (CCM1) and **(2)** (CCM2) **(4)** these modules drive most of the actuators and solenoids, and monitor most of the sensors and switches on the combine.

Header Height Control (HHC) **(5)** module is located on the main stack valve assembly. It receives inputs from the feeder angle and lift pressure sensors on the combine and height sensors on the header, and controls the accumulator, header raise/lower and header tilt solenoids.

Chassis Control Module **(3)** (CCM3) **(6)** [optional] is installed and used to control certain options on the combine, such as the precision farming devices.

Data Logger Unit (DLU) **(7)** [optional] is available with some precision farming systems, and records data provided by the precision farming sensors.

Differential GPS module **(8)** [optional] is available with some precision farming systems, and provides location data to be recorded with the harvest data for mapping purposes.

Engine Control Unit (ECU) **(9)** [optional] is installed on certain engine models to provide enhanced engine control and performance.

PREVIEW - YOUFIXTHIS.COM

Download full manual at youfixthis.com

ENGINE - Static description (B.10.A - C.30.A.20)

CX720, CX740, CX760, CX780, CX820, CX840

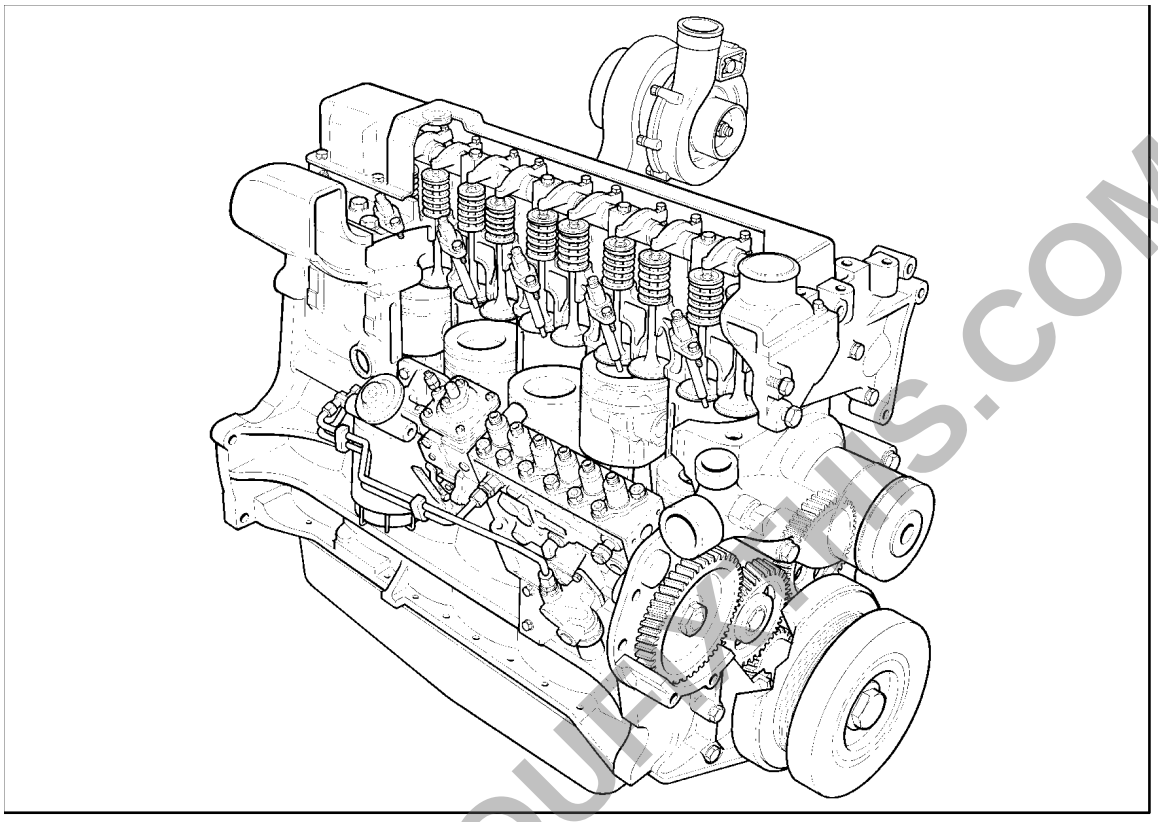

1z0o2004112004 1

The New Holland 7.5 Litre engine is a 6-cylinder turbocharged and aftercooled, having a bore of **111.8 mm** (**4.4 in**) and a stroke of **127 mm** (**5.0 in**) which generates a displacement of **7.5 L** (**456 in3**).

The engine uses a mechanical or electronically controlled in line injection pump depending on model and has been designed to meet current emission regulations and must only be serviced by an authorised service agent. For a detailed Description and Operation of the fuel system reference must be made to the Fuel System Chapter . Refer to **FUEL AND INJECTION SYSTEM - Static description (B.20.A - C.30.A.20)**.

All engines feature cross flow cylinder heads, with the inlet and exhaust manifolds on opposite sides of the cylinder head. The fuel and air combustion process, takes place in the specially designed bowl in the crown of the pistons.

CYLINDER BLOCK ASSEMBLY

The cylinder block is an alloy cast iron with deep cylinder skirts, and water jackets for cooling the cylinders. The cylinder bores are machined integral with the cylinder block, during the manufacturing process.

Cylinders are in line and vertical and numbered 1 to 6 from the front to the rear of the engine. They can be bored oversize for the fitment of sleeves, which are available in service.

The oil pan is the reservoir for the engine oil lubrication system and a cast iron front cover on the front of the engine covers the timing gear assembly.

CYLINDER HEAD ASSEMBLY

The cylinder head incorporates an inlet and exhaust valve per cylinder with the valve rocker arm shaft assembly bolted to the cylinder block through the cylinder head. Cylinder head retaining bolts are evenly spaced with a six point pattern around each cylinder, this ensures an even clamping load across the cylinder head area.

PREVIEW - YOUFIXTHIS.COM
Download full manual at youfixthis.com

2. Screw the extractor 296165 **(2)**, into the case **(3)** Screw down the nut **(1)** and extract the case from the cylinder head.

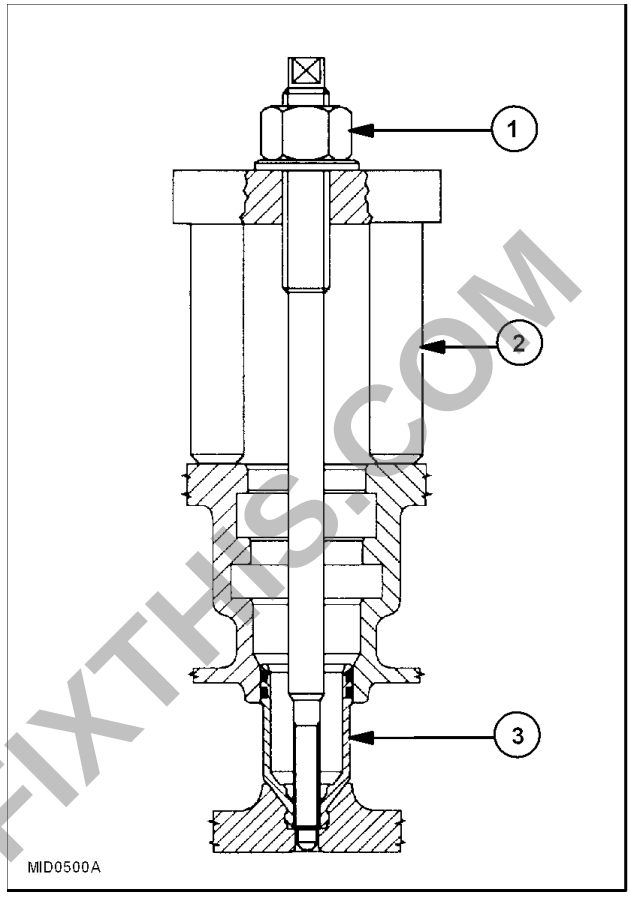

MID0500A 2

3. With tool 292243 **(2)**, remove any residues **(1)** left in the groove of the cylinder head.

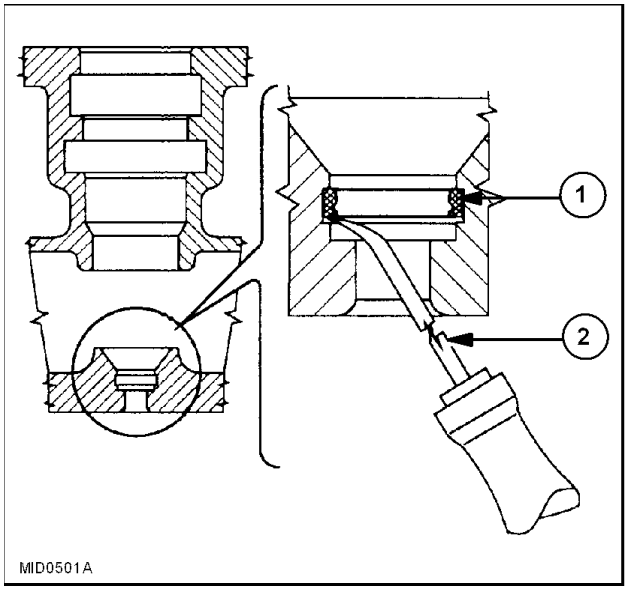

MID0501A 3

PREVIEW - YOUFIXTHIS.COM

Download full manual at youfixthis.com

NEW HOLLAND

POWER PRODUCTION - B

AIR INTAKE SYSTEM - 30.A

CX720 , CX740 , CX760 , CX780 , CX820 , CX840 , CX860 , CX880

PREVIEW - YOUFIXTHIS.COM

Download full manual at youfixthis.com

ENGINE COOLANT SYSTEM - Static description (B.50.A - C.30.A.20)

CX860, CX880

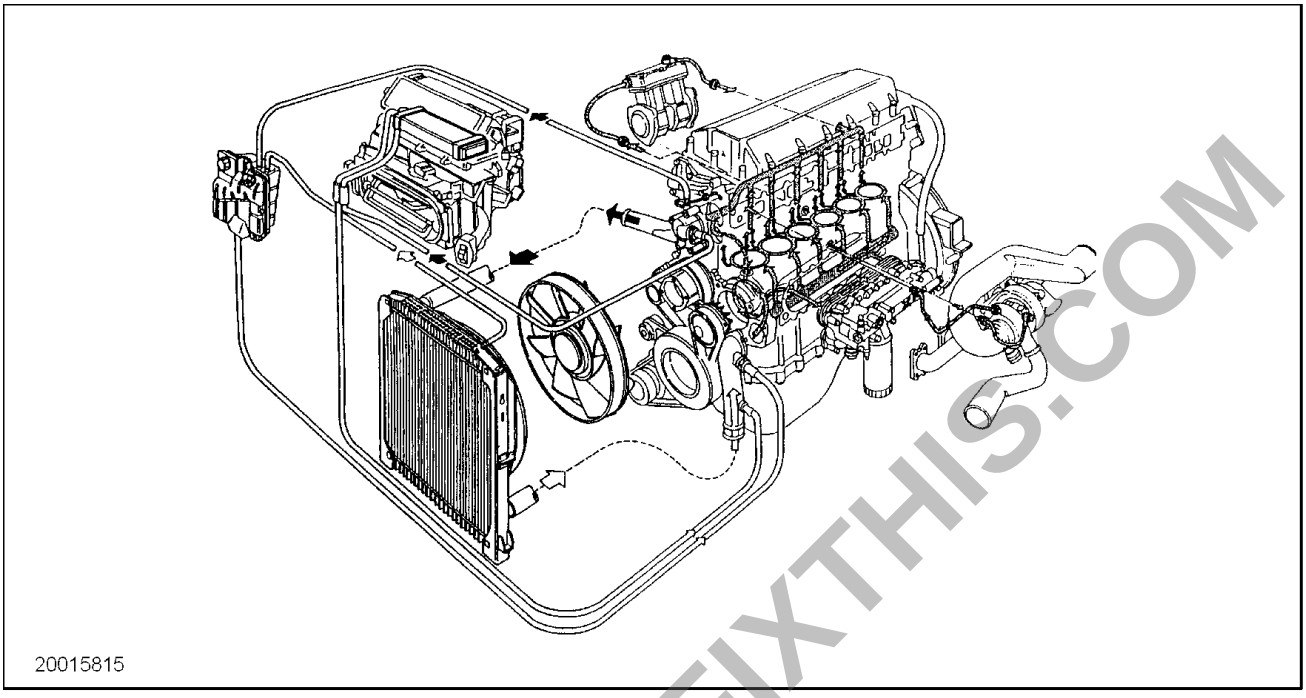

20015815 1

The coolant pump is housed in a seat in the engine block. Many possible sources of leaks are eliminated by the almost total lack of outer pies, sleeves and collars.

PREVIEW - YOUFIXTHIS.COM

Download full manual at youfixthis.com

LUBRICATION SYSTEM - Overview (B.60.A - C.10.A.10)

CX860, CX880

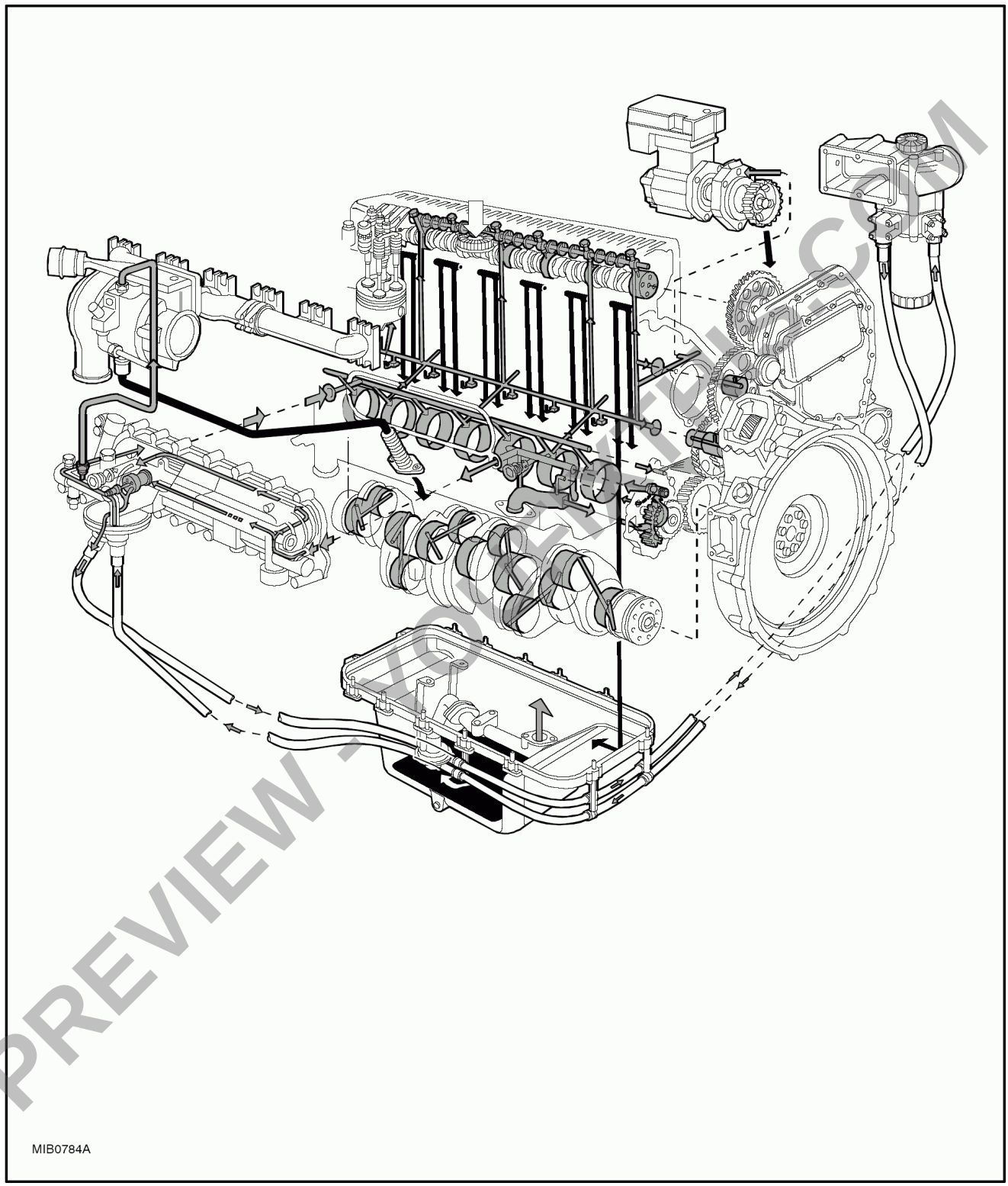

MID0274A 1

Lubrication diagram

Oil by gravity

Oil under pressure

PREVIEW - YOUFIXTHIS.COM
Download full manual at youfixthis.com

Differential - Exploded view (C.20.B.50 - C.10.A.20)

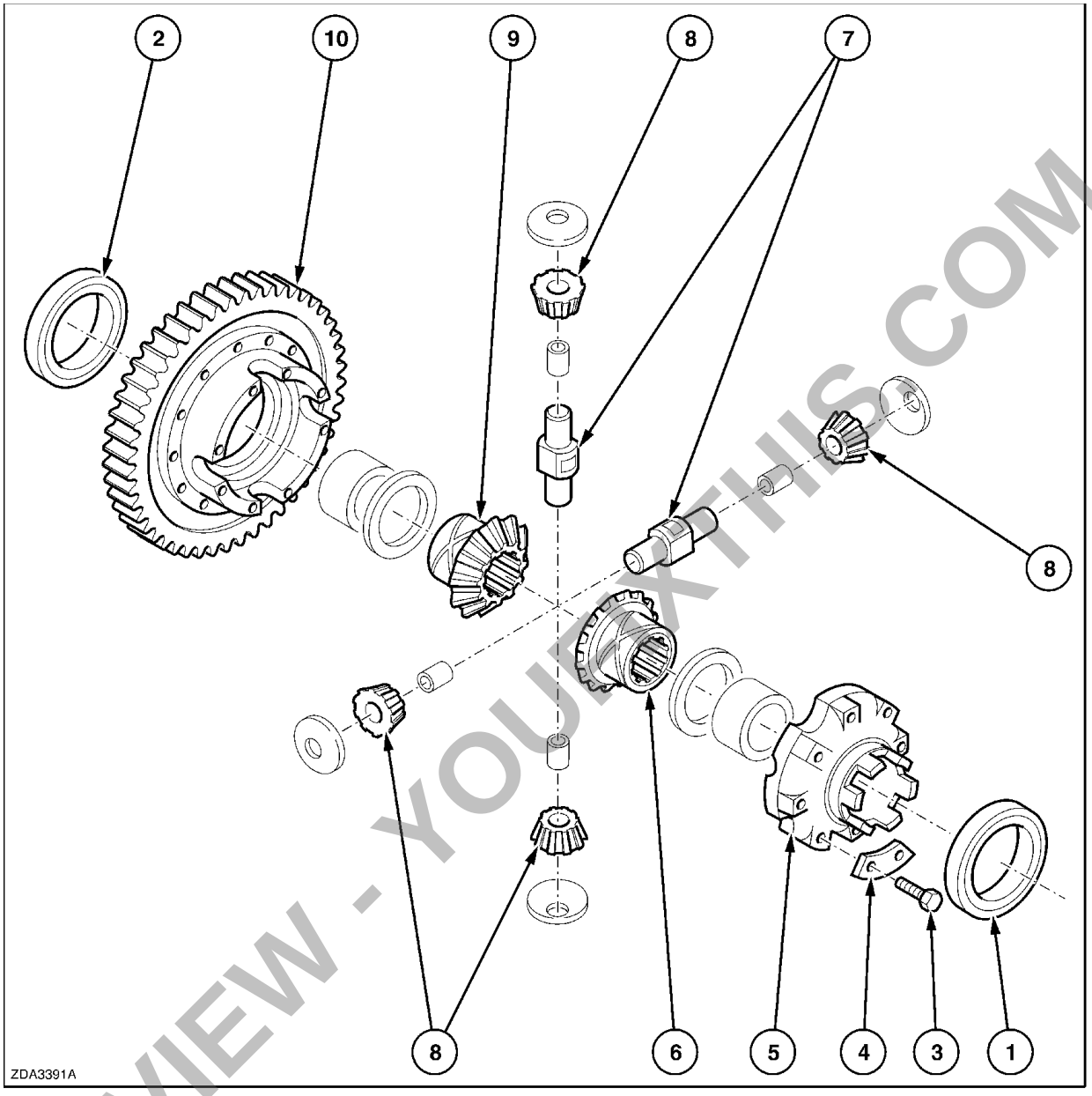

ZDA3391A 1

1 Bearing
2 Bearing
3 Bolt
4 Lockplate
5 Differential housing
6 Differential output gear
7 Planet gear shaft
8 Planet gear
9 Differential output gear
10 Ring gear

PREVIEW - YOUFIXTHIS.COM

Download full manual at youfixthis.com

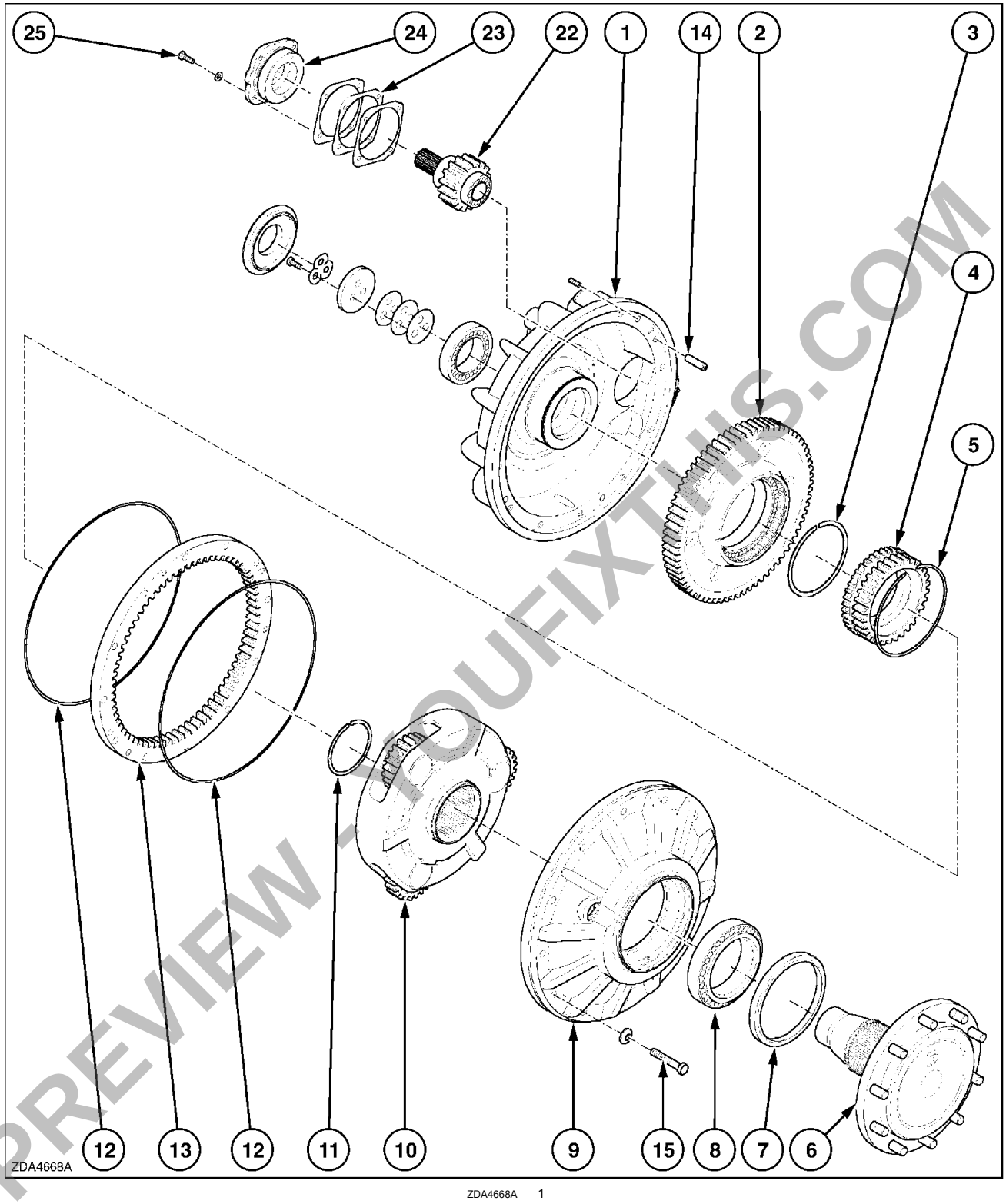

ZDA4668A 1

PREVIEW - YOUFIXTHIS.COM

Download full manual at youfixthis.com

NEW HOLLAND

BODY AND STRUCTURE - E

SHIELD - 20.A

CX720 , CX740 , CX760 , CX780 , CX820 , CX840 , CX860 , CX880

PREVIEW - YOUFIXTHIS.COM

Download full manual at youfixthis.com

TOOL POSITIONING - G

LIFTING - 10.A

CX720 , CX740 , CX760 , CX780 , CX820 , CX840 , CX860 , CX880

PREVIEW - YOUFIXTHIS.COM

Download full manual at youfixthis.com

Drive shaft - Exploded view (K.25.E.41 - C.10.A.20)

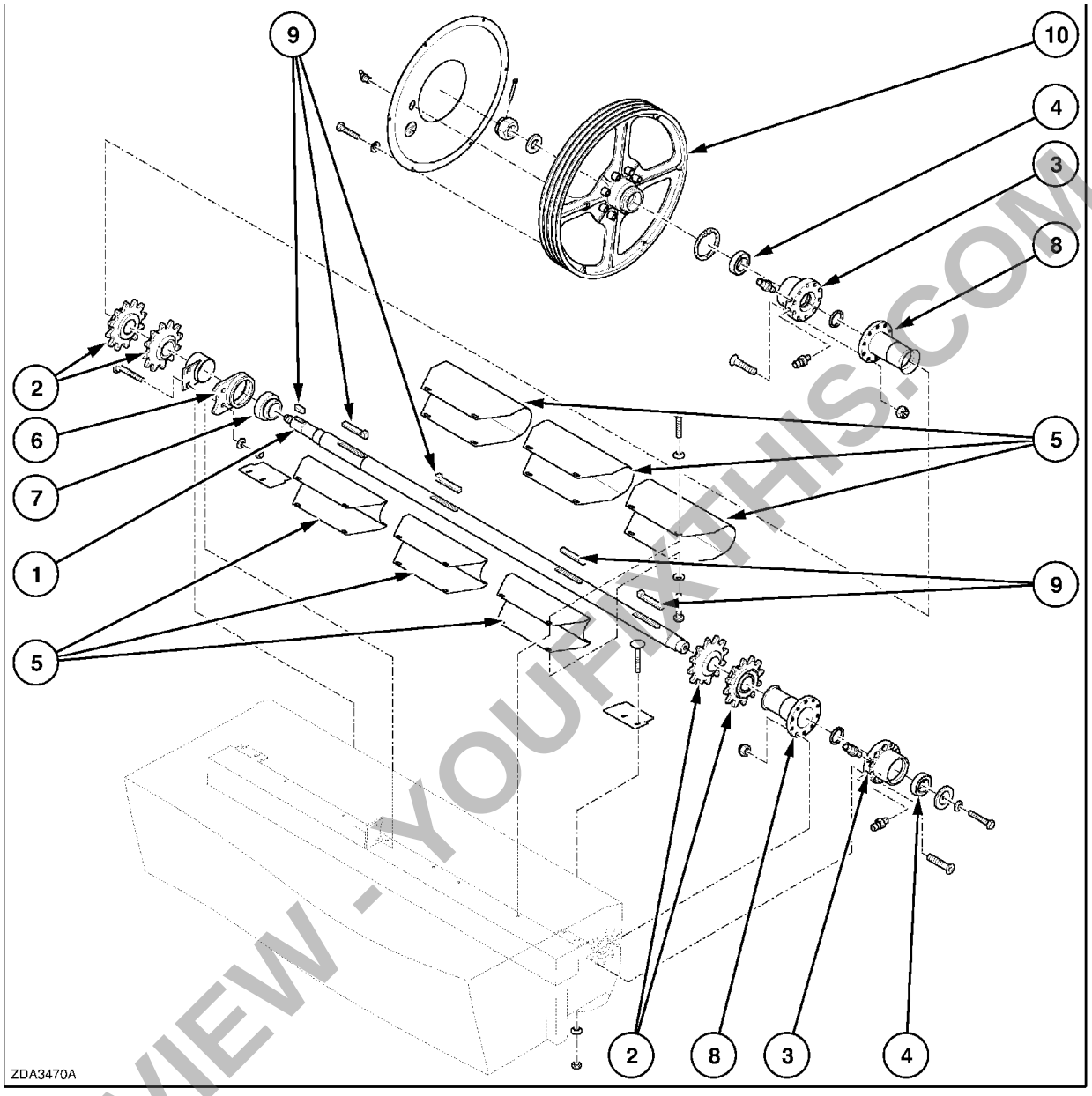

ZDA3470A 1

1 Upper shaft
2 Sprocket
3 Bearing housing
4 Bearing
5 Anti-wrap shield
6 Bearing housing (only CX 800 models)
7 Bearing (only CX 800 models)
8 Guard
9 Headed key
10 Pulley

PREVIEW - YOUFIXTHIS.COM

Download full manual at youfixthis.com

Drum variator Drive disc - Exploded view (K.40.B.43.50 - C.10.A.20)

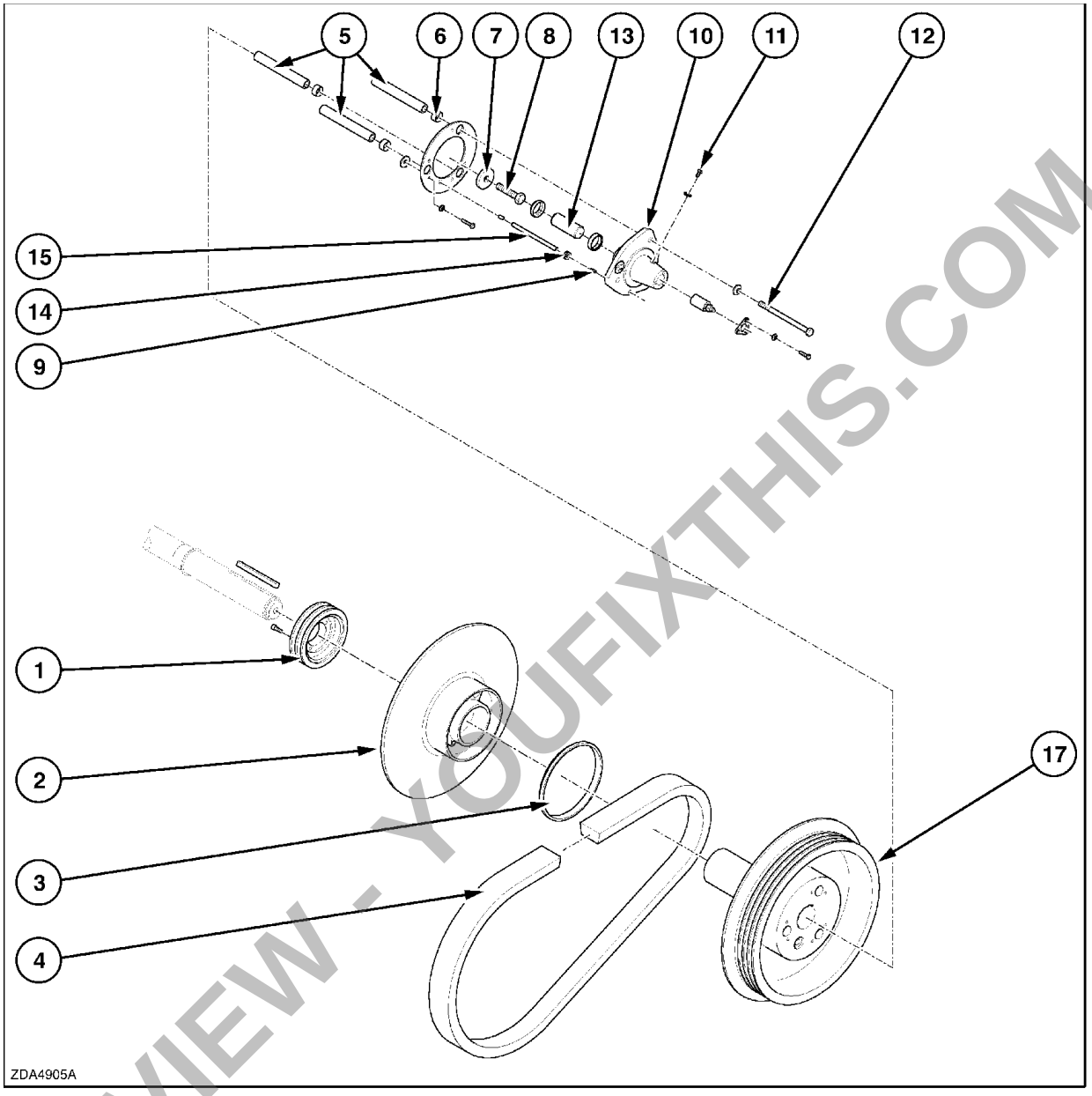

ZDA4905A 1

1 V-pulley
2 Variator disk
3 Seal
4 Drum variator belt
5 Bushing
6 Sleeve
7 Washer
8 Central bolt
9 Grease zerk
10 Support
11 Bleed screw
12 Bolt
13 Drum variator control cylinder
14 Seal
15 Grease tube
16 Pin
17 Variator disk

PREVIEW - YOUFIXTHIS.COM

Download full manual at youfixthis.com

Cross auger drive system - Exploded view (K.60.B.41 - C.10.A.20)

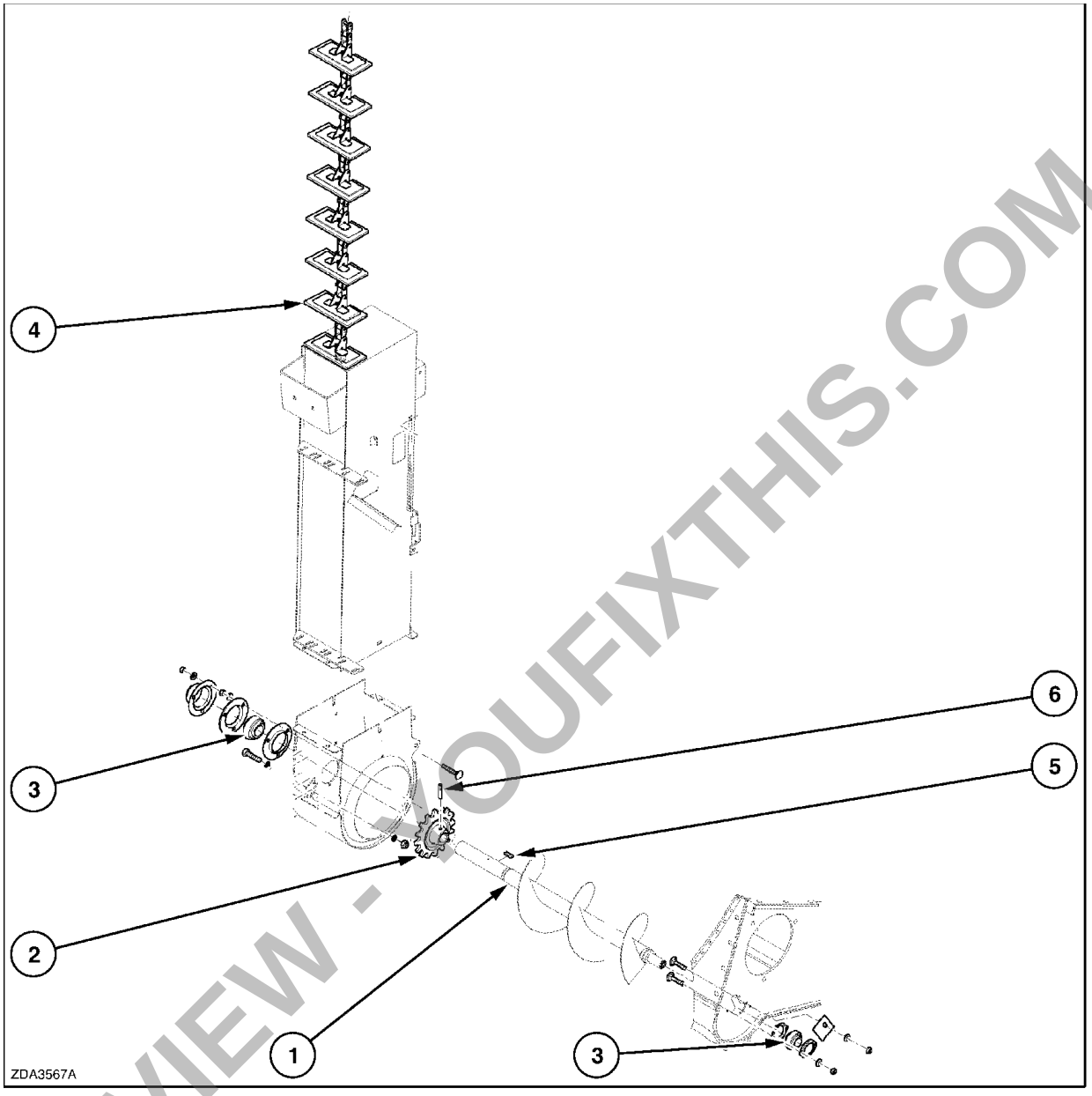

ZDA3567A 1

1 Clean grain cross auger
2 Sprocket
3 Bearing
4 Grain elevator chain
5 Key
6 Dowel pin

PREVIEW - YOUFIXTHIS.COM

Download full manual at youfixthis.com

Shoe drive system Upper bushing - Backlash (K.62.B.45.52 - F.45.A.11)

1. Clamp the output shaft **(1)** in a vise.
2. Check the backlash of gears **(2)** and **(3)**, as follows:
3. Measure the maximum, angular, displacement **(A)**, of sheave **(B)**, by measuring the distance **(C)**. The distance **(C)**, should be **0.1 - 0.6 mm**.
4. If distance **(C)**, is not within **0.1 - 0.6 mm**, add or remove shims **(4)** to obtain the correct backlash. Repeat step **2**.
5. With the backlash correctly adjusted, and with the gearbox bolted together, use a grease gun to fill the gearbox through the grease nipple on the end cap, with NLGI 2 grease until the grease exits the breather.

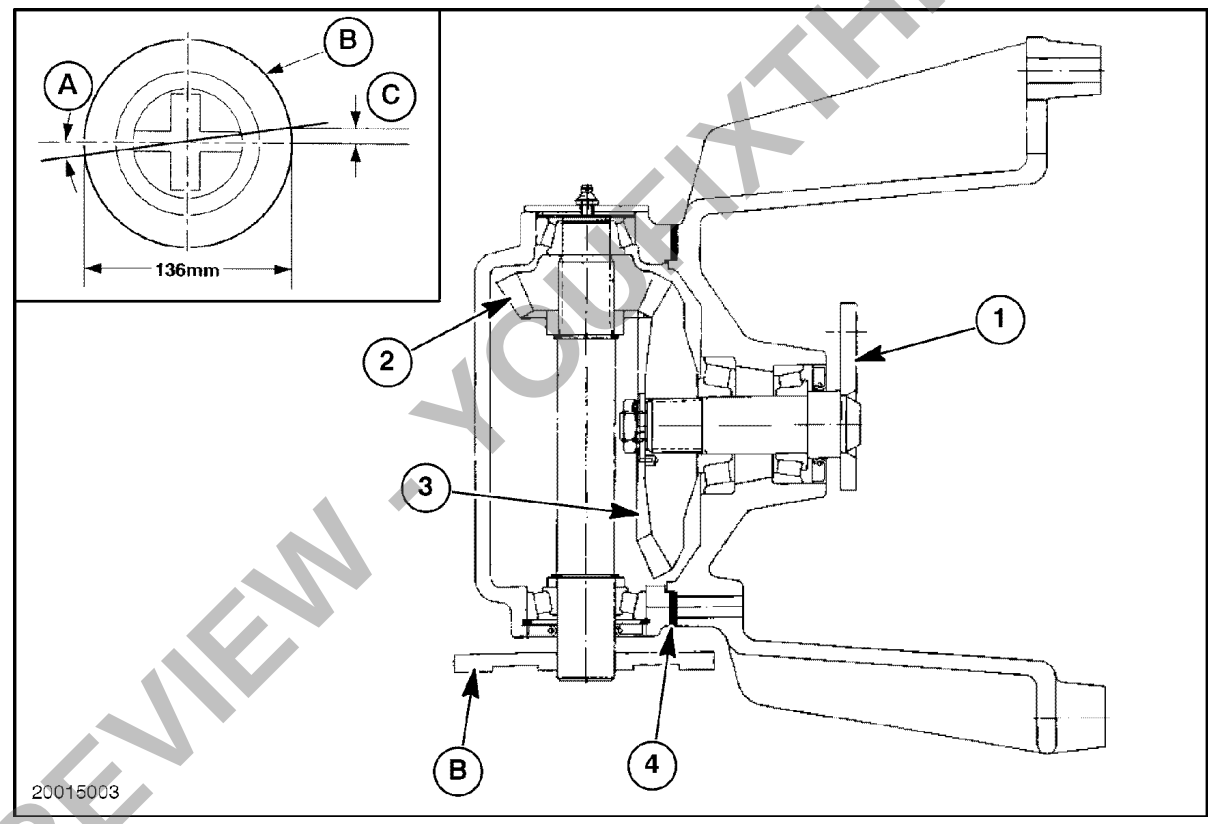

20015003_1253 1

PREVIEW - YOUFIXTHIS.COM

Download full manual at youfixthis.com

RESIDUE HANDLING Chaff blower - Dynamic description (K.64.F - C.30.A.10)

The chaff blower accessory on the CX combine model line, consists of a blower box **(1)**, two blower fans with anti-wrap shields **(2)**, a hydraulic drive motor **(3)** for each of the two fans, a combination pressure relief / flow control valve **(4)** and a series of hydraulic tubes, hoses and quick disconnect couplers **(5)**. The chaff blower system is designed to be removed, during the harvest of certain types of crops. The function of the chaff blower is to create air flow to direct material from the cleaning shoe into the straw chopper out through the rear of the combine in a pattern that is as wide as the cutting swath, for even distribution onto the ground.

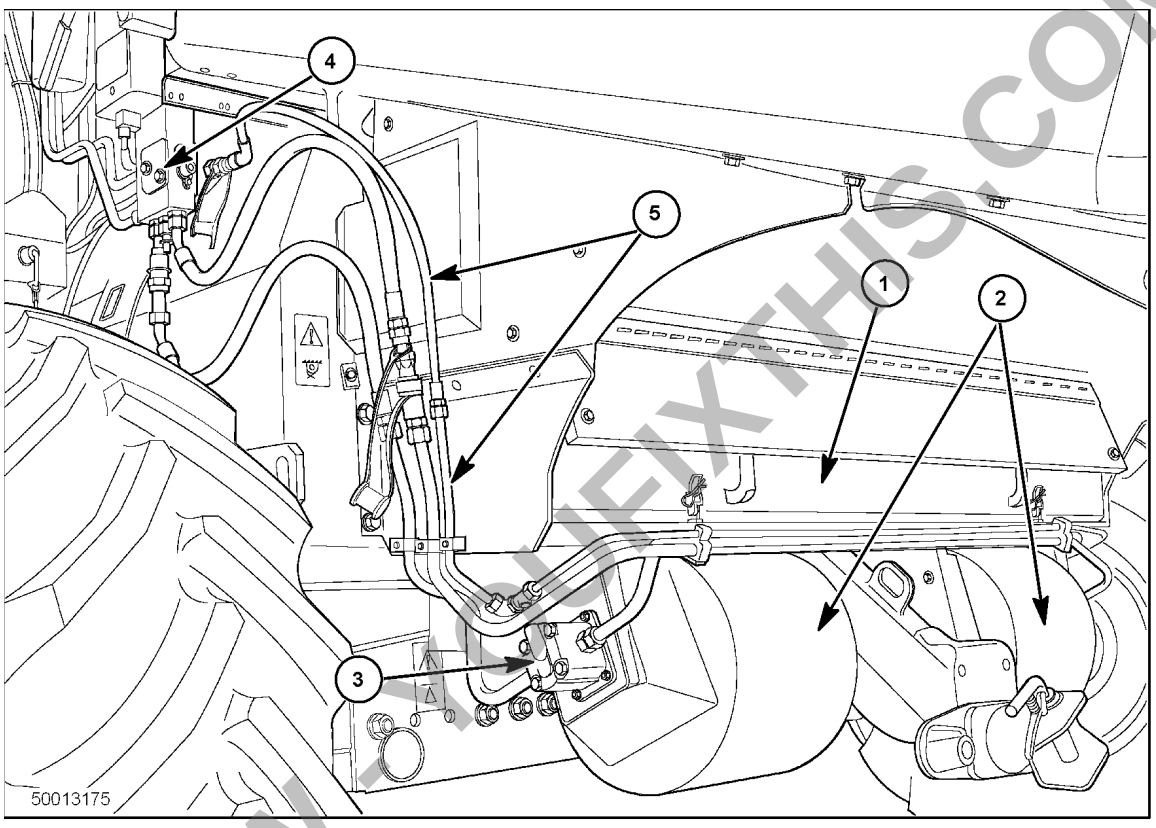

50013175 1

PREVIEW - YOUFIXTHIS.COM

Download full manual at youfixthis.com

Contents

INTRODUCTION

DISTRIBUTION SYSTEMS A

PRIMARY HYDRAULIC POWER SYSTEM A.10.A

SECONDARY HYDRAULIC POWER SYSTEM A.12.A

HYDRAULIC COMMAND SYSTEM A.14.A

PNEUMATIC SYSTEM A.20.A

ELECTRICAL POWER SYSTEM A.30.A

LIGHTING SYSTEM A.40.A

ELECTRONIC SYSTEM A.50.A

POWER PRODUCTION B

ENGINE B.10.A

FUEL AND INJECTION SYSTEM B.20.A

AIR INTAKE SYSTEM B.30.A

EXHAUST SYSTEM B.40.A

ENGINE COOLANT SYSTEM B.50.A

LUBRICATION SYSTEM B.60.A

STARTING SYSTEM B.80.A

POWER TRAIN C

POWER COUPLING Fixed coupling C.10.B

TRANSMISSION Mechanical C.20.B

TRANSMISSION Hydrostatic C.20.F

PROCESS DRIVE Primary process drive C.50.B

TRAVELLING D

FRONT AXLE D.10.A

REAR AXLE D.12.A

2WD-4WD SYSTEM Hydrostatic D.14.E

STEERING Hydraulic D.20.C

SERVICE BRAKE Hydraulic D.30.C

PREVIEW - YOUFIXTHIS.COM

Download full manual at youfixthis.com

PREVIEW ONLY

You're viewing 25 of 4282 pages

The full manual includes:

- All 4282 pages, complete
- Searchable PDF (find any keyword)
- No watermarks
- Instant download
- Print-ready quality

GET FULL MANUAL NOW

New Holland CX720, CX740, CX760, CX780, CX820, CX840, CX860, CX880 Repair Manual

Scan or click anywhere
youfixthis.com

Click anywhere on this page to get the full manual