Copyright © New Holland

SUMMARY

GENERALITIES	SECT. 0
ENGINE	SECT. 1
TRANSMISSION	SECT. 2
FINAL DRIVES	SECT. 3
BRAKES AND STEERING DIFFERENTIAL	SECT. 4
UNDERCARRIAGE	SECT. 5
DOZING EQUIPMENT HYDRAULIC SYSTEM	SECT. 6
ELECTRICAL SYSTEM	SECT. 7

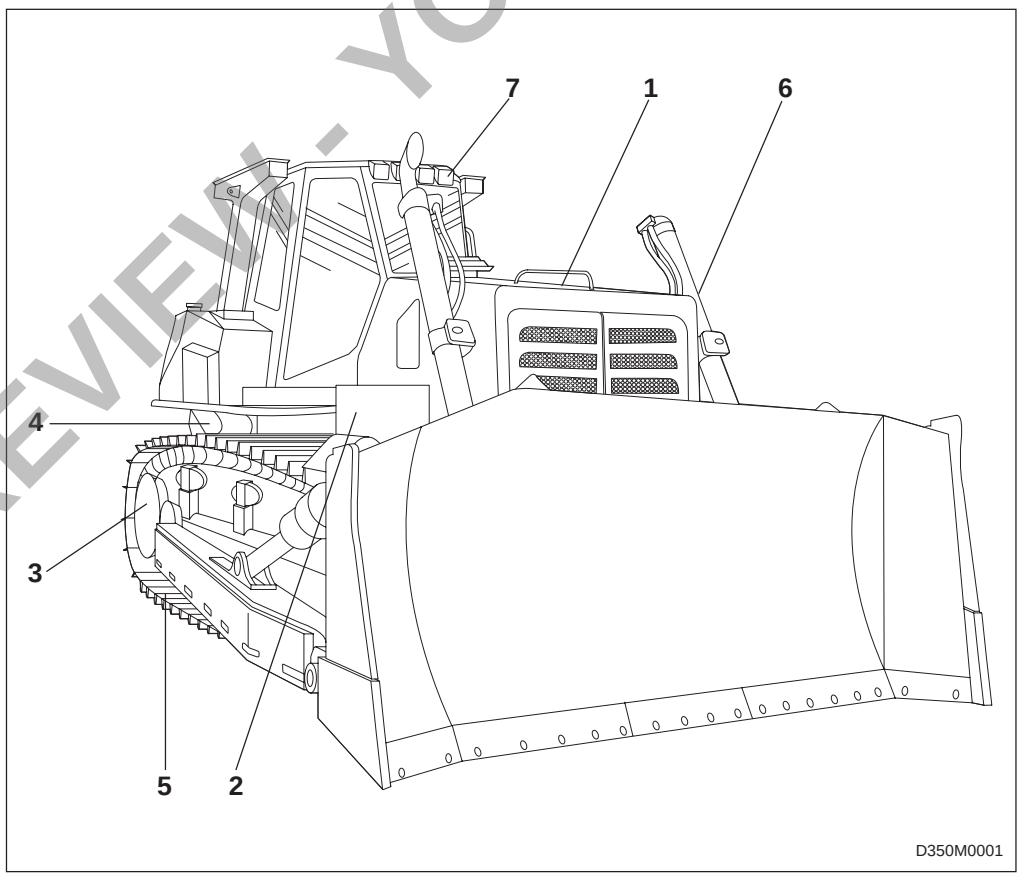

PREVIEW - YOUFIXTHIS.COM

Download full manual at youfixthis.com

Copyright © New Holland

⚠ WARNING

Study carefully this Manual before starting, operating, maintaining, fuelling or servicing the machine.

Read and heed all safety rules before any intervention.

SAFETY RULES

- Do not allow unauthorised personnel to operate service or maintain this machine.
- Do not wear rings, wrist watches, jewellery, loose or hanging apparels, such as ties, torn clothing, scarves, unbuttoned or unzipped jackets that can catch on moving parts. Wear proper safety equipment as recommended for the job. Examples: hard hat, heavy gloves, ear protection, safety glasses or goggles, reflector vests, respirator. Consult your employer for specific safety equipment requirements.
- Keep operator's compartment, stepping points, grab-rails and handles clear of foreign objects, oil, grease, mud or snow accumulation to minimise the danger of slipping or stumbling. Clean mud or grease from shoes before attempting to mount or operate the machine.
- Do not jump on or off the machine. Keep two hands and one foot, or two feet and one hand in contact with step grab rails and handles at all times.
- Do not use controls or hoses as hand holds when climbing on or off machine. Hoses and controls are movable and do not provide a solid support. Also, controls may be inadvertently moved causing accidental machine or equipment movement.
- Never attempt to operate the machine or its tools from any position other than seated in the operator's seat.
- Keep head, body, limbs, hands and feet inside operator's compartment at all times, to reduce exposure to hazards outside the operator's compartment.
- Be careful of slippery conditions on stepping points, hand rails, and on the ground. Wear safety boots or shoes that have a high slip resistant sole material.
- Do not leave the machine until it is completely stopped.
- Check the seat safety belt at least twice a year. If there are signs of wear or fraying or other signs of weakness that could lead to failure, replace it.

STARTING

- NEVER START NOR OPERATE AN UNSAFE MACHINE. Before operating a machine, always ensure that any unsafe condition has been satisfactorily remedied.
- Check brakes, steering and attachment controls before moving. Advise the proper maintenance authority of any malfunctioning part or system.
- Be sure all protective guards or panels are in place, and all safety devices provided are in place and in good operating conditions.
- Be sure exposed personnel in the area of operation are clear of the machine before moving it or its attachments. WALK COMPLETELY AROUND the machine before mounting. Sound horn.
- Before starting machine, check, adjust and lock the operator's seat for maximum comfort and control of the machine.
- Fasten your seat belt (when provided).
- Obey all flag signals and signs.
- Due to the presence on the machine of flammable fluids, never check or fill fuel reservoirs or batteries near open flames, smoking materials or sparks.
- REMEMBER THAT STARTING FLUID IS FLAMMABLE. Follow strictly the recommendations printed on containers and in the Operation and Maintenance Manual.
- DO NOT PUNCTURE OR BURN CONTAINERS.
- Containers must be stored in fresh, well ventilated places, out of reach of unauthorised persons. Follow strictly the instructions provided by the Manufacturer.
- Never use these products near open flames, smoking materials or sparks.

OPERATION

- Do not run the engine of this machine in closed areas without proper ventilation to remove deadly exhaust gases.
- Roll Over Protective Structures are required on loaders, dozers, graders, excavators. NEVER OPERATE machines without ROPS.
- Make sure the Operator's compartment is free of foreign objects, especially if not firmly secured. Never use the machine to transport objects, unless proper securing points are provided.

PREVIEW - YOUFIXTHIS.COM

Download full manual at youfixthis.com

TABLE OF CAPACITIES

ITEM	Q.TY Litres (gal.)	Fluids and lubricants Ambra	VISCOSITY GRADE	Ambient temperature of reference	International classification
Cooling system	37 (9.8)	AMBRA - Agriflù	Agriflù mixed 50% with water ensures anti-freezing down to - 35 °C (-31 °F)	Down to - 35 °C (- 31 °F)	50 -50 mixture of water and anti-freeze. The mixture has anti-oxidation, anti-corrosion, anti-scaling, anti-foaming properties and anti-freezing down to -35 °C (-31 °F).
Fuel tank	675 (178.3)	–	–	–	DIESEL FUEL ASTM No. 2D Grade TT of reputable quality and make
Engine	35 (9.2)	AMBRA - Super Gold	SAE 15W - 40	-15 to 40° C (5 to 104 °F)	API CF-4/SG or CCMC D4 or MIL-L-2104 E
			SAE 10W - 30	-25 to 20 °C (-13 to 68 °F)	
Torque converter - Transmiss.	70 (18.5)	AMBRA - Hydropower	SAE 10W	All season	ATF Type A Suffix A
Steering / brakes transmission housing	175 (46.2)	AMBRA - Super Gold	SAE 15W - 40	-15 to 40 °C (5 to 104 °F)	API CF-4/SG or CCMC D4 or MIL-L-2104 E
			SAE 10W - 30	-25 to 20 °C (-13 to 68° F)	
Hydraulic system	145 (38.3)	HI-TECH 46	ISO 46	-20 to 50 °C (5 to 104 °F)	DIN 51524 PART - 1 DIN 51524 PART - 2 ISO VG 46
Final drives (each)	51 (13.5)	AMBRA - Hypoide 90	SAE 80W - 90	All season	API GL5 or MIL-L-2105
Various grease fittings	-	AMBRA - MG2	NLGI2 Consistency	All season	–

Note: The quantities of fluids indicated are the ones required for periodic changes.

If the content of sulphur exceeds 0.5%, change the engine oil as follows:

Up to 0.5 % S	Periodic change
from 0.5 to 1 %	Half the normal interval
Over 1 %	One quarter the normal interval

Carefully read personal and machine SAFETY PRECAUTIONS at the beginning of this Manual
Download full manual at youfixthis.com
PREVIEW - YOUFIXTHIS.COM
Copyright © New Holland

Copyright © New Holland

TABLE OF TIGHTENING TORQUES

In the event, the tightening torque of bolts and nuts is not specifically indicated in the single sections, the same can be found in the table listed here below:

NUTS (ZNT)					SCREWS (ZNT / DEIDR)		
Class of strength: 10 (R 80)					Class of strength: 10.9 (R 100)		
Diameter and pitch	normal	low type	with polyamaide ring		Diameter and pitch	normal ZNT	autoblocc. ZNT
			normal	low type			
mm	daNm (lb.ft.)	daNm (lb.ft.)	daNm (lb.ft.)	daNm (lb.ft.)	mm	daNm (lb.ft.)	daNm (lb.ft.)
M6 x 1	1.3 (9.6)	1.2 (8.8)	-	-	M6 x 1	1.3 (9.6)	-
M8 x 1.25	3.2 (23.6)	2.6 (19.2)	3.9 (28.7)	3.2 (23.6)	M8 x 1.25	1.3 (9.6)	3.5 (25.8)
M10 x 1.25	7.2 (53)	5.2 (38.8)	8.2 (60.4)	6.2 (45.7)	M10 x 1.25	7.1 (52.3)	7.9 (58.2)
M10 x 1.5	6.5 (47.9)	5 (36.8)	7.7 (56.8)	6 (44.2)	M10 x 1.5	6.5 (47.9)	7 (51.6)
M12 x 1.25	13 (95.8)	8.7 (64.1)	14.5 (106.9)	10.2 (75.2)	M12 x 1.25	12.7 (93.6)	13.9 (102.5)
M12 x 1.75	11 (81.1)	8.1 (59.7)	12.9 (95.1)	9.6 (70.8)	M12 x 1.75	11 (81.1)	12 (88.5)
M14 x 1.5	19.5 (143.8)	13 (95.8)	21.6 (159.2)	15 (110.6)	M14 x 1.5	20 (147.5)	22 (162.2)
M14 x 2	18 (132.7)	12.5 (92.2)	20 (147.5)	14.6 (107.6)	M14 x 2	18 (132.7)	19 (140.1)
M16 x 1.5	30 (221.2)	17 (125.3)	34 (250.7)	20 (147.5)	M16 x 1.5	30 (221.2)	33 (243.3)
M16 x 2	-	-	-	-	M16 x 2	-	-
M18 x 1.5	45 (331.8)	25 (184.3)	50 (368.6)	29 (213.8)	M18 x 1.5	45 (331.8)	48 (353.9)
M18 x 2.5	-	-	-	-	M18 x 2.5	-	-
M20 x 1.5	60 (442.3)	30.5 (224.9)	64.5 (475.5)	35 (258)	M20 x 1.5	60 (442.3)	65 (479.2)
M20 x 2.5	-	-	-	-	M20 x 2.5	-	-
M22 x 1.5	80 (589.8)	41 (302.2)	-	-	M22 x 1.5	80 (589.8)	90 (663)
M22 x 2.5	-	-	-	-	M22 x 2.5	-	-
M24 x 2	100 (737.3)	47 (346.5)	108 (796.2)	52.5 (387)	M24 x 2	100 (737.3)	110 (811)
M24 x 3	-	-	-	-	M24 x 3	-	-
M27 x 2	95 (700.4)	40.1 (295.6)	-	-	M27 x 2	100 (737.3)	-
M30 x 2	130 (958.4)	49.9 (368)	-	-	M30 x 2	140 (1032)	-
M33 x 2	170 (1253.4)	-	-	-	M33 x 2	190 (1400.9)	-
M36 x 3	220 (1622.1)	-	-	-	M36 x 3	240 (1769.5)	-

PREVIEW - YOUFIXTHIS.COM

Download full manual at youfixthis.com

CUMMINS ENGINE QSM11 - LIST OF ERROR CODES (ECM 570)			
ERROR CODE	**COLOUR INDICATOR**	**INDICATOR**	**EFFECT**
111	Red	Internal trouble of ECM controller correlated to hardware memory defects or to supply voltage of controller inner circuits.	The engine fails to start.
115	Red	No signal measured on both engine position and speed sensor.	The engine is cut-off and fails to start.
121	Yellow	No signal measured on one of the two engine position and speed sensors.	No effect on engine performances.
122	Yellow	Excessive voltage measured on intake manifold air pressure sensor circuit.	Reduced engine power.
123	Yellow	Low voltage measured on intake manifold air pressure sensor circuit.	Reduced engine power.
131	Red	Excessive voltage measured on circuit relative to throttle pedal position.	Heavy reduction of power and swing speed. Operating mode "LIMP HOME".
132	Red	Low voltage measured on circuit relative to throttle pedal position.	Heavy reduction of power and swing speed. Operating mode "LIMP HOME".
135	Yellow	Excessive voltage measured on engine oil pressure circuit.	No engine protection on for low oil pressure.
141	Yellow	Low voltage measured on engine oil pressure circuit.	No engine protection on for low oil pressure.
143	Yellow	The engine oil pressure signal indicates a pressure below the lower limit.	Progressive reduction of power and swing speed. If engine protection is activated, the engine is cut-off after 30 seconds from beginning of flashing of indicator light.
144	Yellow	Excessive voltage measured of coolant temperature sensor.	Possible white smoke. No engine protection for coolant temperature.
145	Yellow	Low voltage measured of coolant temperature sensor.	Possible white smoke. No engine protection for coolant temperature.
151	Red	The coolant temperature signal indicates a value higher than 104 °C (220°F).	Progressive reduction of power and swing speed. If engine protection is activated, the engine is cut-off after 30 seconds from beginning of flashing of indicator light.
153	Yellow	Excessive voltage measured on intake manifold air temperature sensor circuit.	Possible white smoke. No engine protection for intake air temperature.
154	Yellow	Low voltage measured on intake manifold air temperature sensor circuit.	Possible white smoke. No engine protection for intake air temperature.
155	Red	The intake manifold air temperature signal indicates a value higher than 93.3°C (200°F).	Progressive reduction of power and swing speed. If engine protection is activated, the engine is cut-off after 30 seconds from beginning of flashing of indicator light.

PREVIEW - YOUFIXTHIS.COM

Carefully read personal and machine SAFETY PRECAUTIONS at the beginning of this Manual

Download full manual at youfixthis.com

Copyright © New Holland

Copyright © New Holland

2.10 TROUBLESHOOTING

WARNING

Comply with all starting and cutting off- procedures and the NOTICES prescribed by the Operation and Maintenance Manual.

WARNING

NEVER USE HANDS to search for suspected pressure leaks. Fluid escaping under can have sufficient force to penetrate the skin.

WARNING

Be sure exposed personnel in the area of operation are clear of the machine before moving it or its attachments. WALK COMPLETELY AROUND the machine before mounting. Sound horn.

WARNING

Cut-off the engine and make sure that pressure is discharged from all systems prior to removing side panels, containers, guards or covers.

2.10.1 TROUBLES, CAUSES, REMEDIES

Note – *Unless differently directed, please refer to the diagram of fig. 2-1.*

TROUBLES	POSSIBLE CAUSES	REMEDIES
1. Lube oil pressure indicator light (**Sc**) stays ON with engine operating at high rpm.	a. Insufficient quantity of oil in the transmission housing.	Check level (*)
	b. Clogged filters.	Inspect filters.
	c. Oil leakages or air sucked due to broken or cracked pipes, or defective seals.	Identify leakage and replace defective parts.
	d. Use of oil of wrong viscosity.	Check and change oil if required.
	e. Power pumps worn.	Check pumps.
	f. Torque converter safety valve (**13**) stuck in open position	Check valve.
	g. Lube safety valve (**18**) seized in open position.	Check valve.

(*) Note – *To check the transmission oil level, proceed as follows:*
- *warm-up the oil to 70 to 90 ° C (158 to 195 °F) (temperature gauge about half way the green field);*
- *run the engine at low idle for 3-5 minutes, with transmission in neutral;*
- *cut-off the engine and check the level.*

PREVIEW - YOUFIXTHIS.COM

Download full manual at youfixthis.com

Copyright © New Holland

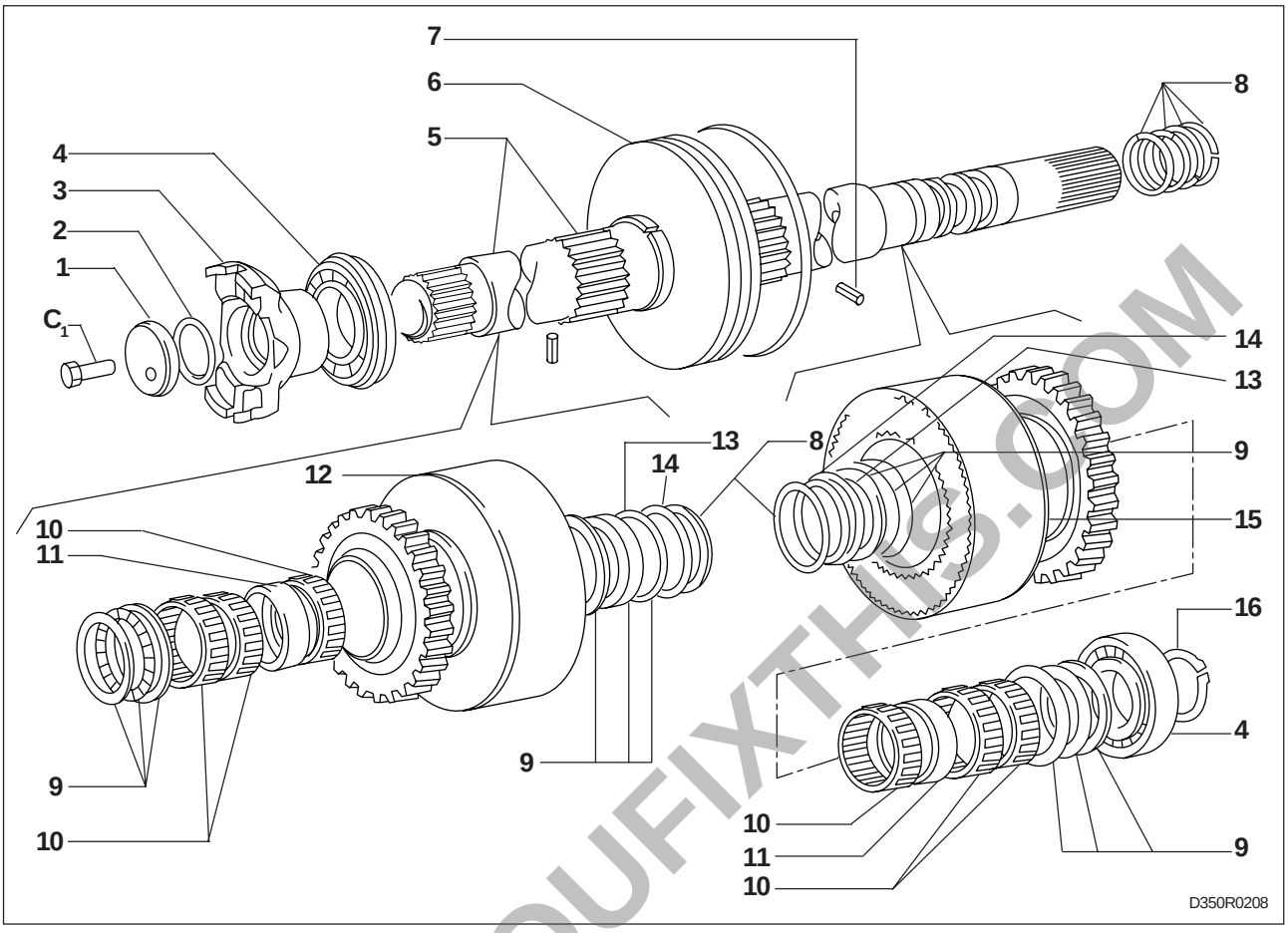

Fig. 2-61 Components of the transmission input shaft

C_1. Sleeve (**3**) securing screws - **1.** Disc - **2.** O-Ring - **3.** Motion input sleeve - **4.** Shaft support bearings - **5.** Shaft - **6.** Piston - **7.** Lubrication splitting pins - **8.** Rotating sealing rings - **9.** Thrust bearings - **10.** Roller bearings - **11.** Spacers - **12.** "REVERSE" clutch pack - **13.** Spacers - **14.** Retaining half-rings - **15.** "FORWARD" clutch pack - **16.** Snap ring.

PREVIEW - YOUFIXTHIS.COM

Download full manual at youfixthis.com

TRANSMISSION D350

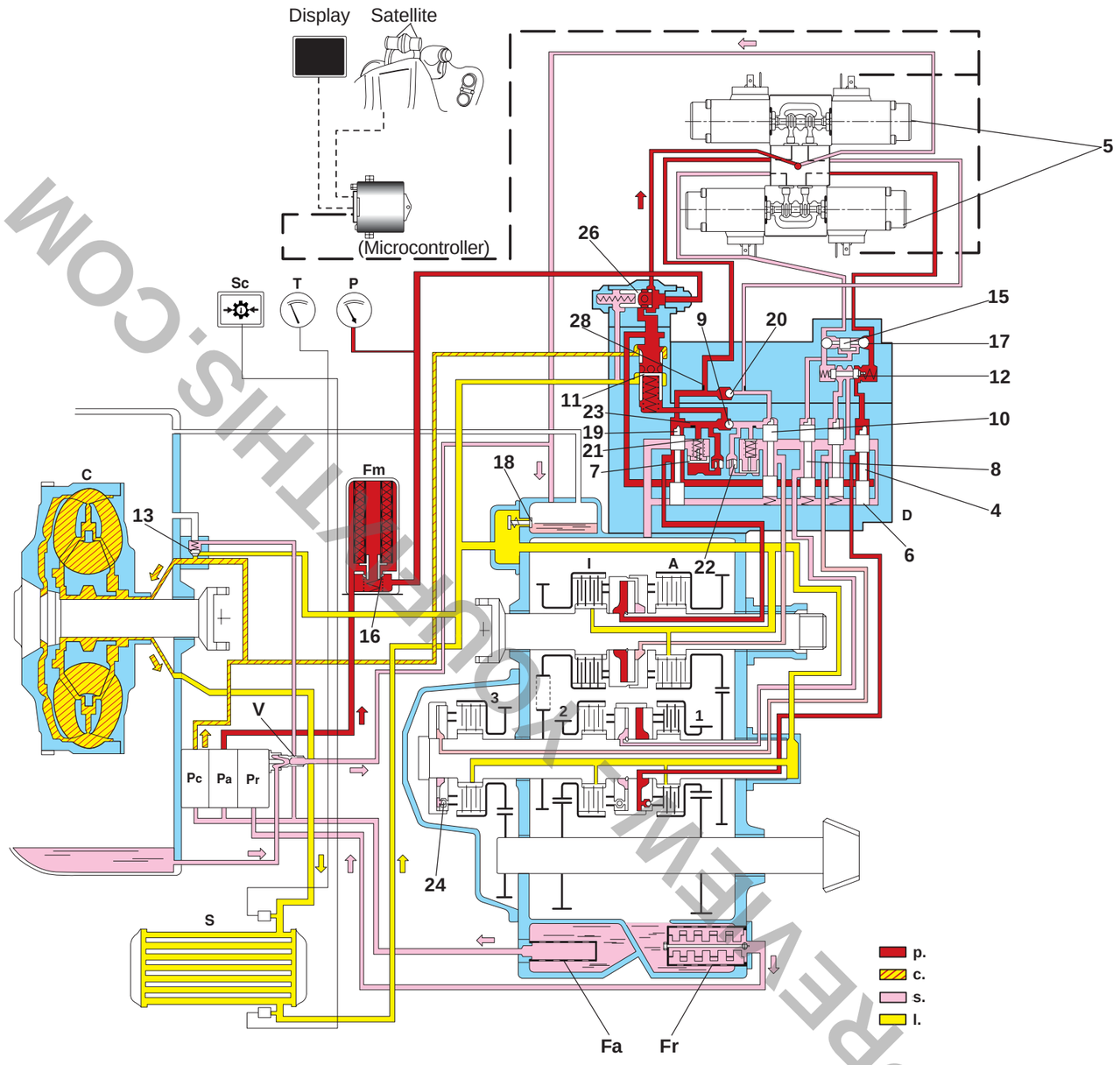

Fig. 2-1 Torque converter-transmission hydraulic system diagram with 1st REVERSE speed engaged

A. Forward speed engagement - **C.** Torque converter - **Fa.** Transmission-converter (Pa) and converter (Pc) supply pump suction filter - **Fm.**Transmission- converter supply pump delivery filter - **Fr.** Magnetic filter on scavenger pump suction (Pr) for oil scavenging from gear compartment - **D.** Transmission control valve - **I.** Reverse speed engagement - **P.** Control oil pressure gauge - **Pa.** Transmission-converter supply pump - **Pc.** Converter supply pump - **Pr.** Oil scavenger pump - **S.** Transmission oil radiator - **Sc.** Lube oil low pressure indicator - **T.** Lube oil temperature gauge - **V.** Converter scavenging suction connection - **1.** First speed - **2.** Second speed - **3.** Third speed - **4.** Third spool - **5.** Gearshift solenoid valves - **6.** First spool - **7.** Modulating valve piston - **8.** Second spool - **9.** Block valve - **10.** Forward spool - **11.** Transmission pressure relief valve - **12.** Gearshift spool - **13.** Converter pressure relief/safety valve - **15.** Pusher - **16.** Filter safety valve (Fm) - **17.** Block balls - **18.** Lube circuit safety valve - **19.** Reverse spool - **20.** Block valve - **21.** Modulating valve plunger - **22.** Orifice-check for modulating valve - **23.** Orifice for flow reduction - **24.** Quick discharge valves - **26.** Interceptor valve in neutral - **28.** Orifice - Colour code: **p** = oil under pressure - **c** = converter circulating oil - **s** = suction or discharge oil - **l** = lube oil.

PREVIEW - YOUFIXTHIS.COM

Copyright © New Holland

Download full manual at youfixthis.com

Copyright © New Holland

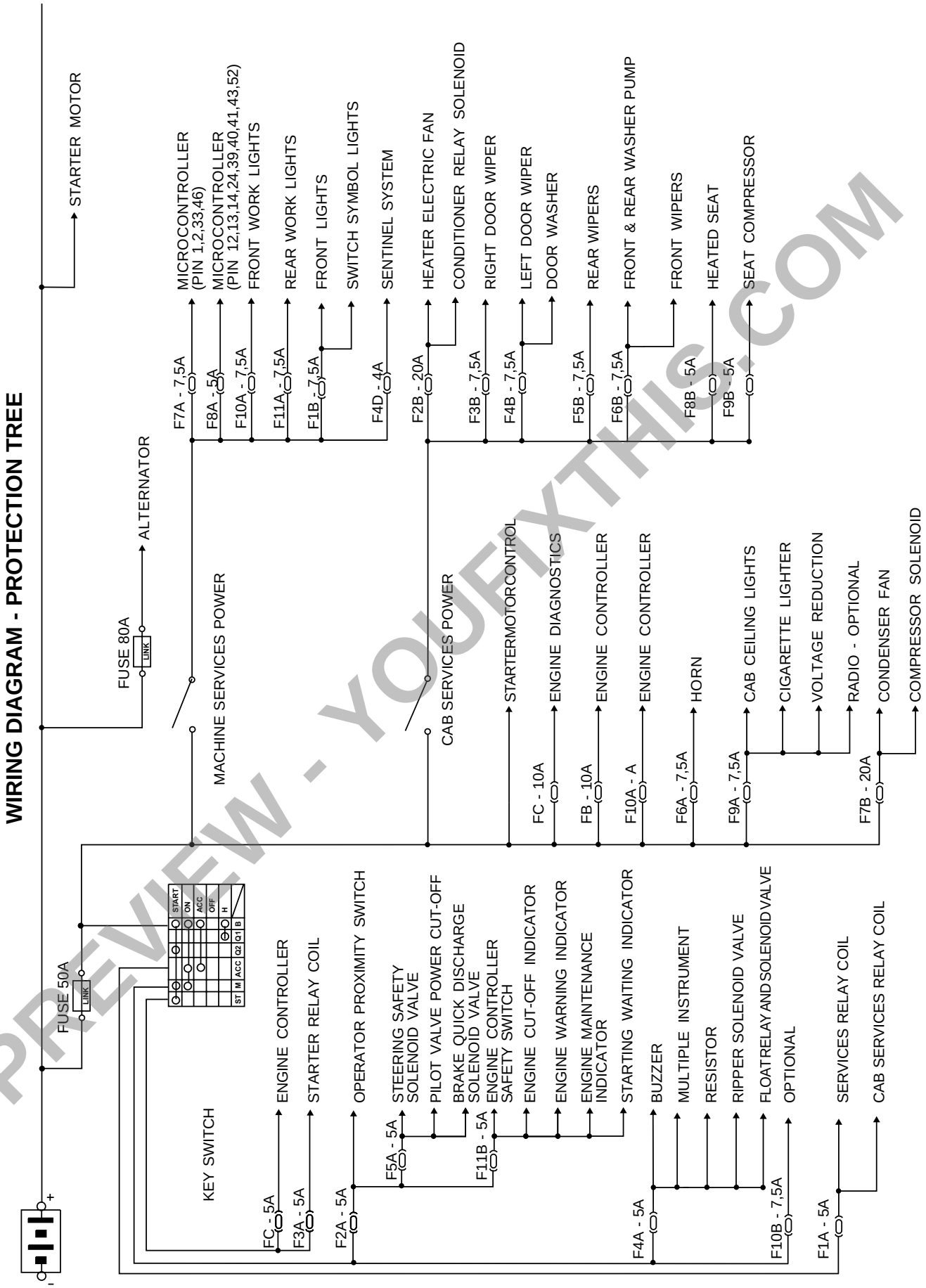

PREVIEW - YOUFIXTHIS.COM

Download full manual at youfixthis.com

Copyright © New Holland

PREVIEW - YOUFIXTHIS.COM

Download full manual at youfixthis.com

Copyright © New Holland

UNITS OF MEASURE

The units of measure used in this Manual are those adopted by the International System (I. S.) superseding those previously used by the M.K.S. system.

Force: decanewton (daN) supersedes kilogram (kg)

Pressure: bar, supersedes kg/sqcm

Torque: decanewton x meter (daN - meter) supersedes kg-m

To convert the units of measure, the following table applies:

	multiply	by	to obtain
Force	kg	0.9807	daN
Pressure	kg/cm^2	0.9807	bar
Torque	kg m	0.9807	daN m

Note – *For current repair needs, the following equivalencies can be considered valid:*
kg = daN; kg/sqcm = bar; kgm = daNm.

To convert the units of measure of the International System into an Anglo Saxon system, please refer to the following table:

	multiply	by	to obtain
Mass	kg	2.205	lb
Length	mm	0.03937	in.
Pressure	bar	14,5	p.s.i.
Torque	daN m	7.373	lb.ft
Flow	l/min	0.2642	gal/min (US)
Temperature	°C	$\frac{9}{5}$ °C + 32	°F
Power	kW	1.341	Hp
Capacity	l	0.2642	US gal.
Speed	Km/h	0.6213	mph

CLASSIFICATION OF STANDARD COMPONENTS TO DETERMINE THE TIGHTENING TORQUES

Note – *In case, in the different sections, the tightening torque is not listed, refer to the table "TIGHTENING TORQUES", only after identifying exactly the component.*

The latter is identified by a coded eight digit number, allowing a complete description of the item.

Example:

l	/	a	b	c	d	e	/	f	g

l - Standard index digit

It is always represented by the digit 1. This number indicates that the item can be fabricated in different versions, differing for the material and coating.

a - b - c - d - e - Standard base digit

It is a number always composed of five digits identifying the dimensional specifications of the item

f - Material index digit

This digit indicates the material used fro a defined item. Its meaning is indicated in the table to follow.

g - Coating index digit

It indicates the coating applied to a defined item.

PREVIEW - YOUFIXTHIS.COM

Download full manual at youfixthis.com

Copyright © New Holland

Remove the snap ring retaining the rear bearing (see fig. 2-33).

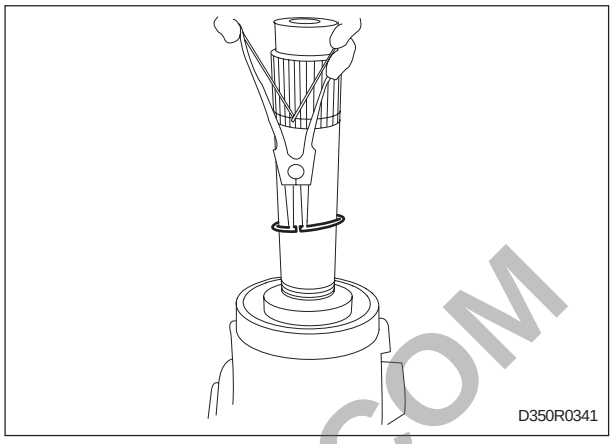

Fig. 2-33

Install an adequate puller to remove the rear bearing from the drive shaft (fig. 2-34).

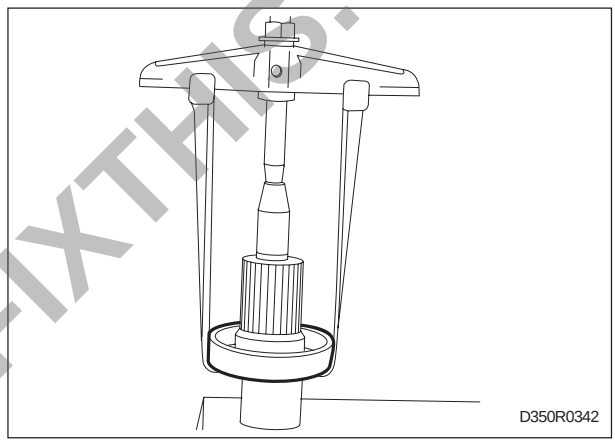

Fig. 2-34

2.2.3 INSPECTION OF PARTS AND REASSEMBLY

Clean accurately all the parts removed.
Prior to re-assembly, check that:

- the bearing roll freely without hesitations and do not show a radial play;
- the inner splines of the stator in correspondence with the fitting with the relevant hub are not deformed or worn (no radial play must exist once installed);
- the press fitting zones of the bearings do not show signs of scoring or dragging indicating possible loosening or rotation of the parts in their seat.

Note – *Prior to the assembly it is recommended to replace all snap rings and sealing elastic rings.*

Re-install al the parts reversing the sequence described for the disassembly, considering the following special operations.

PREVIEW - YOUFIXTHIS.COM

Download full manual at youfixthis.com

Copyright © New Holland

2.9 TRANSMISSION OIL RADIATOR

The transmission oil radiator is incorporated in the main radiator of the machine. IT uses its own aluminium made core and is located on the left side of the water radiator.
Cooling is provided by the main fan.

2.9.1 CLEANING AND INSPECTION OF TIGHTNESS OF HEAT EXCHANGER

Remove possible traces of calcium scaling using the appropriate de-scaler for radiators in the solutions prescribed by the "**OPERATTION AND MAINTENANCE MANUAL**" of the machine.
The cleaning of the core is done by opening the conveyor upper panel and the conveyor lower panels to remove the materials accumulated using a water or compressed air jet (fig. 2-97).

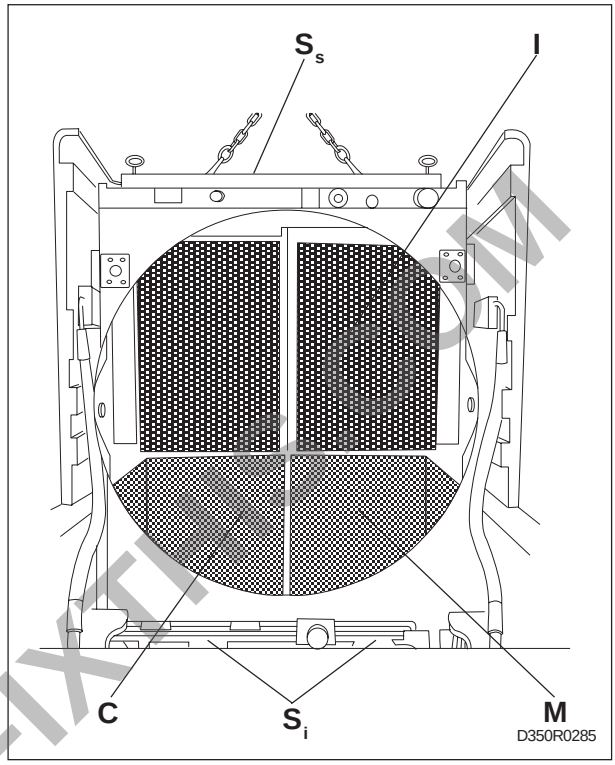

Fig. 2-97 Radiator

C. Transmission oil section - **I.** Hydraulic oil section - **M.** Engine coolant section - **S_1.** Lower panels - **S_s.** Upper panel.

WARNING

Wear proper protective equipment such as safety goggles or safety glasses with side shields when using compressed air to clean parts to prevent injuries by metal or other particles apt to fly or fall. Limit the pressure to 2.1 bar (30.5 psi) in accordance with current local or national regulations.

WARNING

Never use gasoline, solvent or other flammable fluid to clean parts. Use exclusively qualified, non-flammable, non-toxic commercial solvents.

PREVIEW - YOUFIXTHIS.COM
Download full manual at youfixthis.com

Copyright © New Holland

Turn the final drive 180 °, then take housing cover (**A**) lift it with an adequate device and tighten it on the final drive housing, using LOCTITE 518 and screws M12 x 1.5 (fig. 3-49) to a torque of 9 daNm (66.4 lb.ft.).

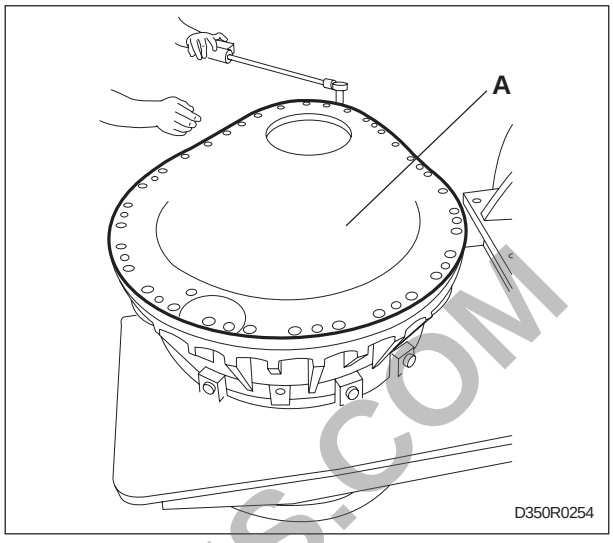

Fig. 3-49

Take the drive gear and press the bearing inner race (**B**, fig. 3-50) after warming it up in an induction oven.

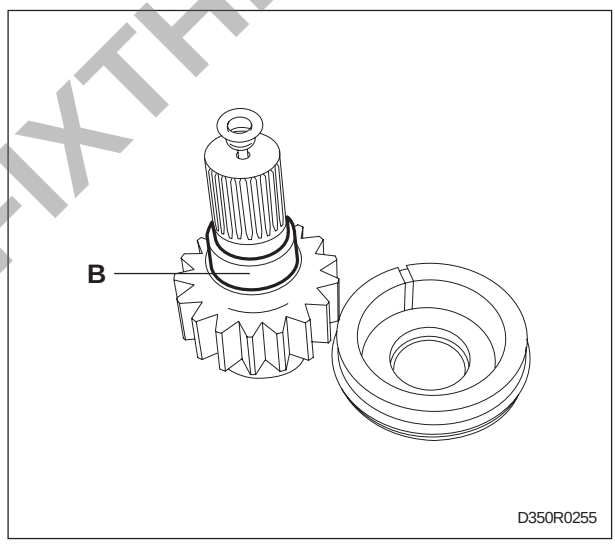

Fig. 3-50

Using tool 380000920 insert the seal inside the bearing housing, then, using tool 380000923 bearing outer race (**D**) and bearing (**C**) of fig. 3-51.

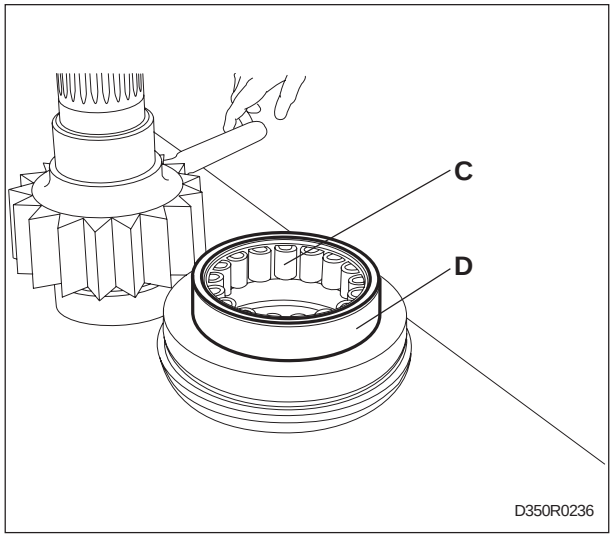

Fig. 3-51

PREVIEW - YOUFIXTHIS.COM
Download full manual at youfixthis.com

Copyright © New Holland

4.4.2 BRAKE HYDRAULIC PUMP (Removal/Disassembly/Reassembly)

The oil to the steering differential circuit is supplied by the equipment hydraulic pump; for the relevant disassembly instructions refer to **Section 6** - **EQUIPMENT HYDRAULIC SYSTEM**, in this Manual.

Removal

To remove the pump from the torque converter cover it is necessary to:

- tilt the cab and disconnect the piping from the pump (**1**).

- remove the fastening screws of the front cover to the converter housing (**C**) and take the pump out.

Disassembly

The pump components can be split up by removing the screws (**1**), the front and rear covers and pulling out the supports (**7**) together with the gears (**8** and **9**).

Parts inspection

WARNING

Never use gasoline or solvents or other flammable fluids to clean parts. Use authorized commercial, non-flammable, non-toxic solvents.

Clean all parts thoroughly and blow them with dry compressed air.
Inspect the support bushings of the pump gears; replace if they present scores, pitting or excessive wear.
Check if the pump body (**5**) is worn on the areas facing the gears. Replace damaged parts. Replace the oil seals.

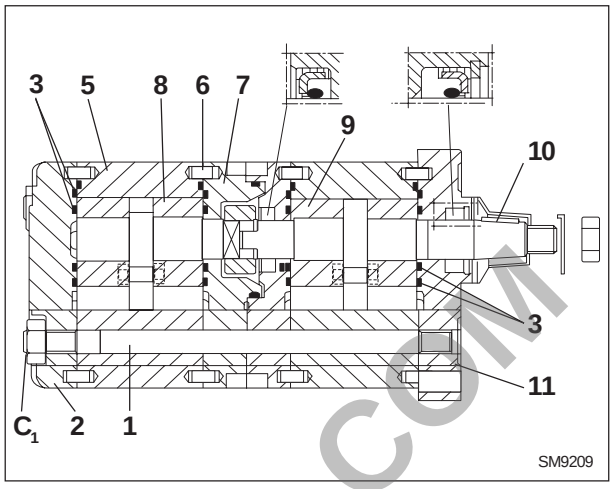

Fig. 4-32 Section view of brake hydraulic pump

C_1. Torque value 5 daNm - **1.** Pump fastening screw - **2.** Rear cover - **3.** O-Ring - **5.** Pump body - **6.** Dowel pin - **7.** Supports - **8.** and **9.** Pump gears - **10.** Key - **11.** Front cover.

PREVIEW - YOUFIXTHIS.COM

Download full manual at youfixthis.com

Copyright © New Holland

Successively, install the spur gear.

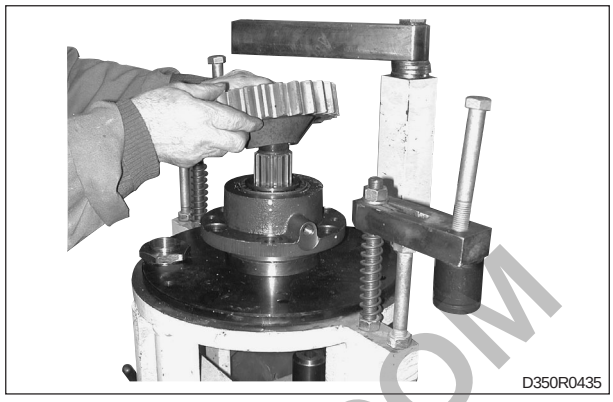

Fig. 4-151

Tighten the ring nut to a torque of 100 daNm.

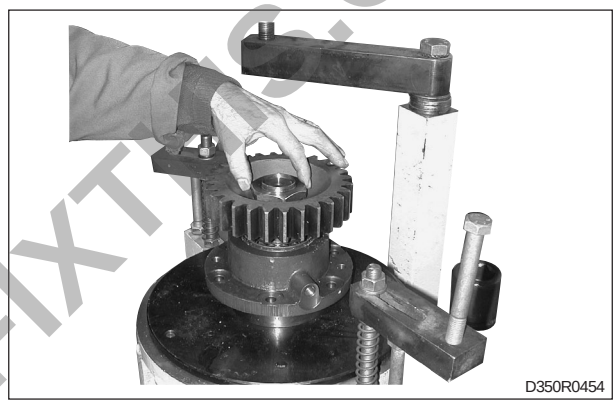

Fig. 4-152

Check torque reaction; admitted value: 0.05 ÷ 0.07 daNm.
If the torque reaction measured value is not correct, remove the ring nut and select shims conveniently, then crimp the ring nut with a calking chisel on both sides of the shaft.

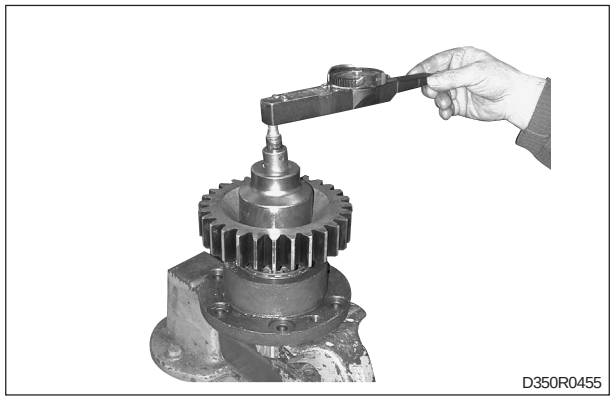

Fig. 4-153

Reassembly of right-hand gear support

Refer to the sequence described for reassembly of differential right-hand gear (see relevant description in paragraph **Reassembly of differential right-hand gear**).

PREVIEW - YOUFIXTHIS.COM

Download full manual at youfixthis.com

Copyright © New Holland

5.2 TROUBLESHOOTING

The major causes for premature or abnormal wear of the undercarriage components are listed here below.

Slack track chain tension

Troubles

1. Very fast wear on links, pins and bushes of the track chain.
2. Fast wear of the sprocket teeth and the rib of the shoe.
3. Possible damage or breakage of the idler, idler supports both during the forward and reverse motion. The track chain can derail from the sprocket when the machine steers.
4. The track chain could fail to engage correctly the sprocket teeth, both when moving forward or reverse. The track chain could jump the idler, when the machine is steering.
5. Noisy track chain.
6. The track chains fills with foreign materials (*).

(*) Note – *When the machine operates under conditions facilitating the entry of foreign materials into the undercarriage components, it is recommended that the tension of the system is checked frequently.*
In fact, the tension can increase the rubbish included between the track chain components and the idler tensioner device.
The presence of foreign materials inside, could cause delay or prevent the movement of the idler. This preclusion could result in a dangerous load on the track chain (pins, bushes, links), on the idler shaft and the final drives.

High track chain tension

Troubles

1. Low speed and insufficient traction power. The machine fails to develop the prescribed pushing capacity.
2. The machine turns rightward or leftward, caused by the track chain which is tighter.
3. Fast wear of pins, bushes and links.
4. Wear of the final drive bearings.

Insufficient tightening of the screws securing the shoes to the track chain

Troubles

Elongation of the screw holes on the link.

Remedies

The loosening can be caused by a thinning of the shoe due to wear, or by an incorrect torque tightening of the screws to the prescribed values. Make sure that the mating faces between shoe and track chain are perfectly clean and free from paint.

Working on steep slopes

Troubles

Wear at the tips of pins, on the side of the master link, on the inner and outer rims of the bottom rollers, the sprockets and idlers.

Remedies

Operating on steep slopes, causes strong stress to the undercarriage components, with subsequent fast wear. Whenever possible, change frequently the direction and/or the trajectory of the machine.

PREVIEW - YOUFIXTHIS.COM

Download full manual at youfixthis.com

Copyright © New Holland

6.3.3 HYDRAULIC CONTROL VALVE (Overhaul)

The control valve is located on the right fender (see fig. 6-7). to overhaul it is not necessary to remove it, then proceed as follows:

- tag and disconnect all hydraulic pipes from the control valve (see fig. 6-8);

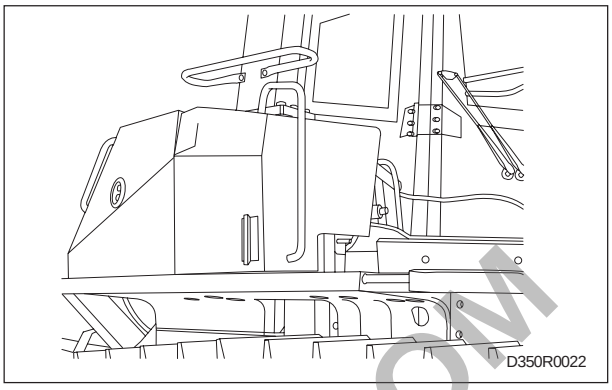

Fig. 6-7

WARNING

Fluid under pressure. Always rest the hydraulic equipment on the ground. Cut-off the engine, move the control levers a few times, prior to disconnecting the connections of the system.

- drain all the residual oil;
- proceed with the disassembly.

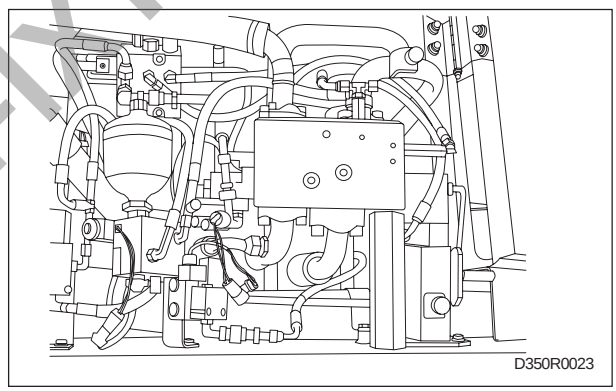

Fig. 6-8

PREVIEW - YOUFIXTHIS.COM

Download full manual at youfixthis.com

PREVIEW ONLY

You're viewing 18 of 348 pages

The full manual includes:

- All 348 pages, complete
- Searchable PDF (find any keyword)
- No watermarks
- Instant download
- Print-ready quality

GET FULL MANUAL NOW

New Holland D350, Crawler Dozer Workshop Manual

Scan or click anywhere
youfixthis.com

Click anywhere on this page to get the full manual