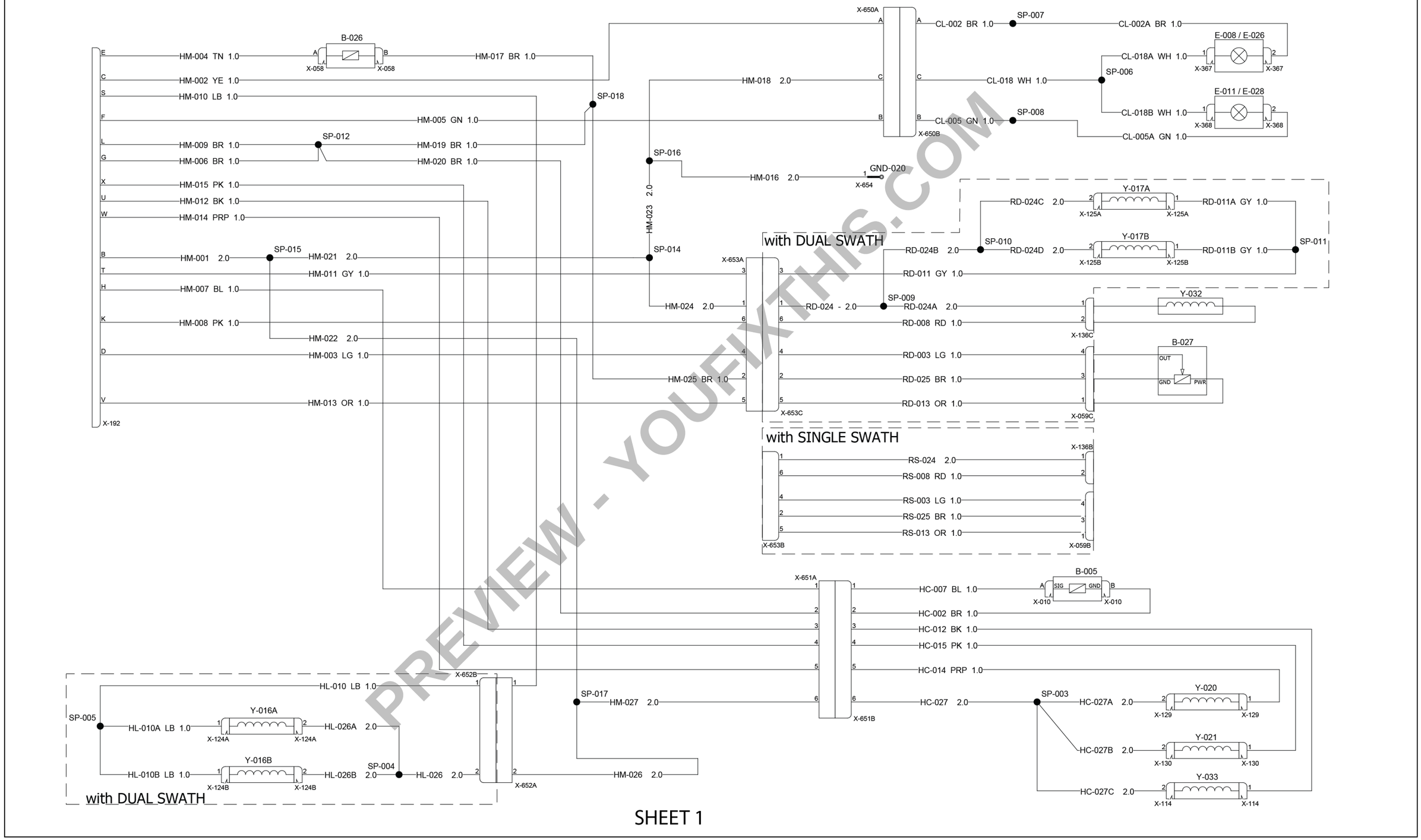

SHEET 1

NHIL16HT00332JB 1

PREVIEW - YOUFIXTHIS.COM

Download full manual at youfixthis.com

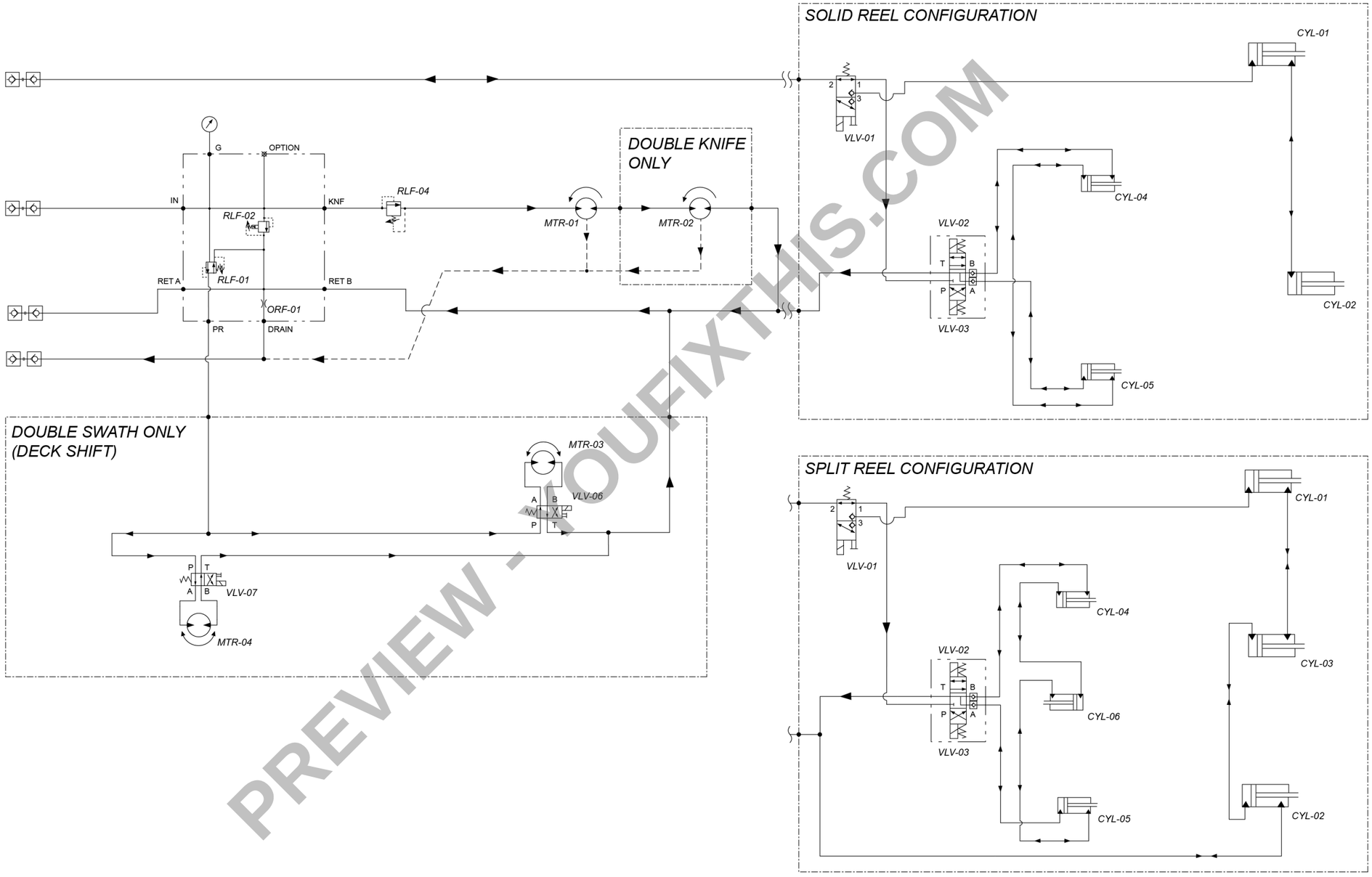

PREVIEW - YOUFIXTHIS.COM

NHIL16HT00329JA 1

Download full manual at youfixthis.com

Torque - Nominal tightening torques for normal assembly

NOTE: *In the metric tables, nominal sizes M4 through M8 hardware torque specifications are shown as a Newton meters (pound-inches) numerical value.*
Nominal sizes M10 through M24 hardware torque specifications are shown as a Newton meters (pound-feet) numerical value.

Metric hex head (non-flange) hardware

Plain (PLN) – an unplated hardware finish with residual manufacturing oils
Zinc-dichromate (ZND) – a yellow colored chemical plating formula yellow applied to the hardware

Nominal size	Class (CL) 8.8 bolt and Class (CL) 8 nut	Class (CL) 10.9 bolt and Class (CL) 10 nut	Locknut CL 8 w/CL 8.8 bolt	Locknut CL 10 w/CL 10.9 bolt
	PLN and ZND	PLN and ZND	ZND	ZND
	N·m (lb in)	N·m (lb in)	N·m (lb in)	N·m (lb in)
M4	3.5 (31)	5.0 (44)	1.4 (13)	2.8 (25)
M5	7.0 (62)	10 (88)	2.9 (26)	5.5 (49)
M6	11.8 (104)	17 (150)	4.9 (43)	9.4 (83)
M8	28.8 (255)	41.3 (366)	11.9 (105)	23 (204)
	N·m (lb ft)	N·m (lb ft)	N·m (lb ft)	N·m (lb ft)
M10	57 (42)	82 (60)	24 (17)	45 (33)
M12	100 (74)	143 (105)	41 (30)	79 (38)
M14	159 (117)	227 (168)	66 (48)	125 (92)
M16	248 (183)	354 (261)	102 (75)	195 (144)
M18	352 (260)	487 (359)	145 (107)	268 (198)
M20	500 (369)	690 (509)	206 (152)	380 (280)
M24	865 (638)	1195 (882)	357 (263)	657 (485)

Metric flange head hardware

Plain (PLN) – an unplated hardware finish with residual manufacturing oils
Zinc-dichromate (ZND) – a yellow colored chemical plating formula yellow applied to the hardware

Nominal size	Class (CL) 8.8 bolt and Class (CL) 8 nut	Class (CL) 10.9 bolt and Class (CL) 10 nut	Flange locknut CL 8 w/CL 8.8 bolt	Flange locknut CL 10 w/CL 10.9 bolt
	PLN and ZND	PLN and ZND	ZND	ZND
	N·m (lb in)	N·m (lb in)	N·m (lb in)	N·m (lb in)
M4	3.8 (34)	5.5 (49)	4.2 (37)	6.1 (54)
M5	7.7 (68)	11 (97)	8.5 (75)	12 (106)
M6	13 (115)	18.7 (166)	14.3 (127)	20.6 (182)
M8	31.7 (281)	45.5 (403)	35 (310)	50 (443)
	N·m (lb ft)	N·m (lb ft)	N·m (lb ft)	N·m (lb ft)
M10	63 (47)	90 (66)	69 (51)	99 (73)
M12	110 (81)	157 (116)	121 (89)	173 (128)
M14	175 (129)	250 (184)	193 (142)	275 (202)
M16	272 (201)	389 (287)	299 (221)	428 (316)
M18	387 (286)	535 (395)	426 (315)	589 (435)
M20	550 (406)	759 (560)	605 (447)	835 (616)
M24	951 (702)	1315 (970)	1046 (772)	1447 (1067)

PREVIEW - YOUFIXTHIS.COM

Download full manual at youfixthis.com

Draper and reel hydraulic circuit oil filter – Replace

To remove any contamination from the hydraulic system and for optimal draper belt and reel performance, you must replace the hydraulic oil filter after the first 50 hours of operation. After the initial change, replace the filter every 250 hours or seasonally.

NOTICE: *Using the correct hydraulic oil filter specified for this system is important. Obtain the replacement filter from your service parts dealer.*

Contamination of the hydraulic system could cause:

- A surge of the reel speed
- A surge of the draper speed
- Poor control of the reel circuit
- Poor control of the draper circuit

NOTE: *When these symptoms are present, there is frequently damage to the pilot operated relief valve in the secondary manifold.*

Oil filter – Replace

1. Obtain the required oil filter from your NEW HOLLAND service parts dealer.
2. Avoid contamination. Clean the service area such as the filter head, the adjacent hoses, and the fittings.
3. Place an oil catch bucket under the filter.
4. Remove (unscrew) the oil filter.
5. Discard the filter and any drained oil in accordance with local ordinances.
6. On the new filter, lubricate the seal on the top of the filter with clean hydraulic oil.
7. Install the new filter, turning the filter until snug, and then an additional half turn.

   NOTICE: *Do not overtighten the filter.*

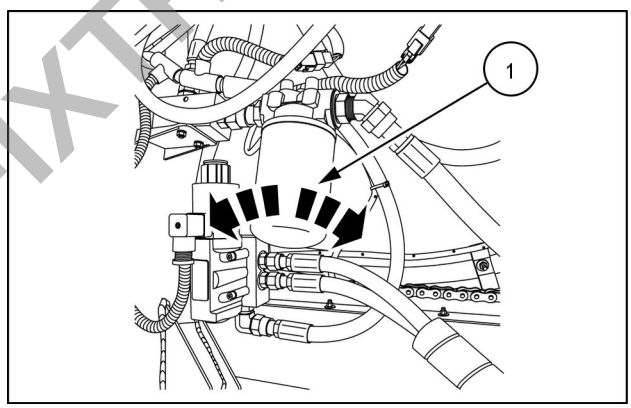

NHIL15HT00386AA 1

PREVIEW - YOUFIXTHIS.COM

Download full manual at youfixthis.com

Hydraulic systems - Troubleshooting

Problem	Possible Cause	Correction
Hydraulic oil is overheating.	System is opening a relief valve	Locate and inspect the relief valves in the main and secondary hydraulic manifolds.
	Faulty pump or motor.	Repair or replace pump or motor as required.
	Draper belt too tight or misaligned.	Adjust draper belt tension or alignment.
	Hydraulic couplers.	Check the couplers to the windrower and verify they are connected correctly.
	Case drain restriction.	Remove the orifice.
	Hydraulic oil viscosity is too light.	Refill with the correct grade **NEW HOLLAND AMBRA MULTI G 134™ HYDRAULIC TRANSMISSION OIL**.

PREVIEW - YOUFIXTHIS.COM

Download full manual at youfixthis.com

General specification

Specifications – Draper header

DuraSwath™ Model	421HB	425HB	430HB	436HB	440HB
Windrower model applicability (Four-cylinder engine)	**Speedrower®** SR130 and SR160 ***NOTE:*** *The listed header models will not fit prior-model windrowers.*				Not applicable
Windrower model applicability (Six-cylinder engine)	**Speedrower®** SR200, SR220, SR240, and SR260 ***NOTE:*** *The listed header models will not fit prior-model windrowers.*				
Approximate weight (includes reel)	**1783 kg** (**3930 lb**)	**2121 kg** (**4675 lb**)	**2554 kg** (**5631 lb**)	**3040 kg** (**6702 lb**)	**3254 kg** (**7174 lb**)
Header flotation	Independent hydraulic flotation on all windrowers.				
Crop delivery	Double swath only	Single or double swath (Center delivery)			Single swath only (Center delivery)
Cut width	**6.4 m** (**21 ft**)	**7.6 m** (**25 ft**)	**9.1 m** (**30 ft**)	**11.0 m** (**36 ft**)	**12.2 m** (**40 ft**)
Cutting height (minimum) at maximum tilt	**1.91 cm** (**0.75 in**) at an **8°** tilt.				
Center-delivery windrow width opening	**127 cm** (**50 in**) (China only) **142 – 183 cm** (**56 – 72 in**)	**142 – 183 cm** (**56 – 72 in**)		**163 – 203 cm** (**64 – 80 in**)	
Double-swath end windrow width opening	**81 – 109 cm** (**32 – 43 in**)	**137 – 165 cm** (**54 – 65 in**) Variable by adjusting the width of the end deflectors.			Not applicable
Transport height to guard tips	**110.0 cm** (**43.3 in**) • Tilt cylinder fully retracted				
	81.0 cm (**31.9 in**) • Tilt cylinder fully extended				
Transport height to lowest point on header (excluding gauge wheels)	**71.1 cm** (**28.0 in**) • Tilt cylinder fully retracted				
	69.6 cm (**27.4 in**) • Tilt cylinder fully extended				

Specifications – Cutterbar

DuraSwath™ Model	421HB	425HB	430HB	436HB	440HB
Crop cutting system	• Schumacher (SCH) Easy-Cut system: spring steel guards, ProCut bolt-on knife sections, and roller guide system • NEW HOLLAND system: forged steel standard guards or stub guards, bolt–on knife sections, and adjustable hold-down clips				
Knife drive	Double knife	Single or double knife		Double knife	
Knife stroke/speed	**8.5 cm** (**3.35 in**) per stroke **1400 spm**				
Tilt angle range	**2 – 8°**				

Specifications – Reels

DuraSwath™ Model	421HB	425HB	430HB	436HB	440HB
Reel choice ***NOTE:*** *HB reels are recommended for green hay cutting*	UII six-bat solid reel with plastic fingers				
				UII six-bat split reel with plastic fingers	
	HB six-bat solid reel with plastic fingers				
				HB six-bat split reel with plastic fingers	

PREVIEW - YOUFIXTHIS.COM
Download full manual at youfixthis.com

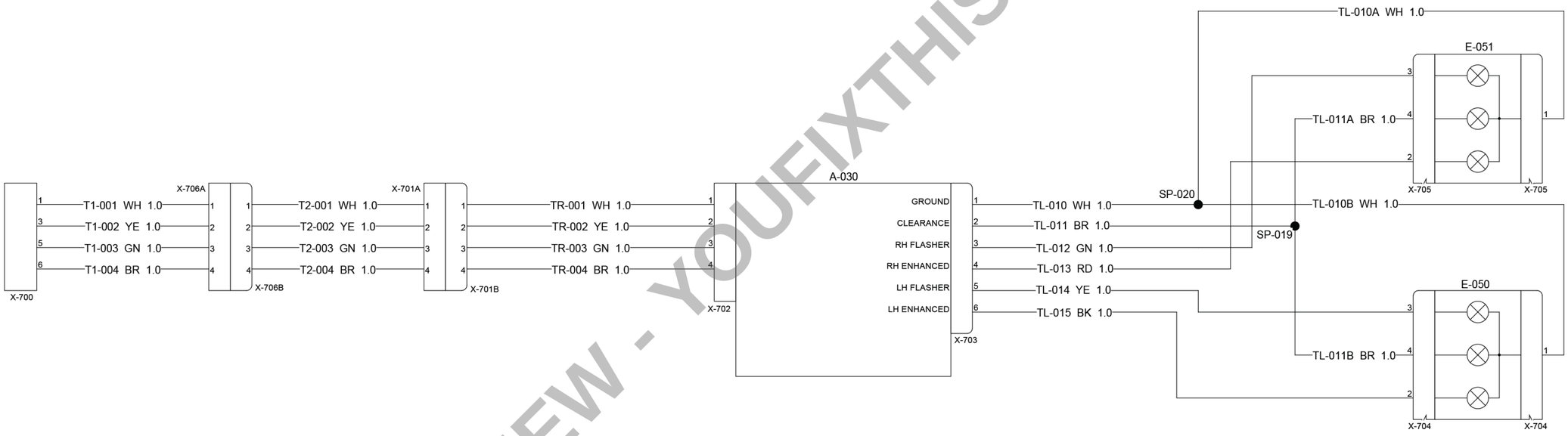

SHEET 2

NHIL16HT00333JA 1

PREVIEW - YOUFIXTHIS.COM

Download full manual at youfixthis.com

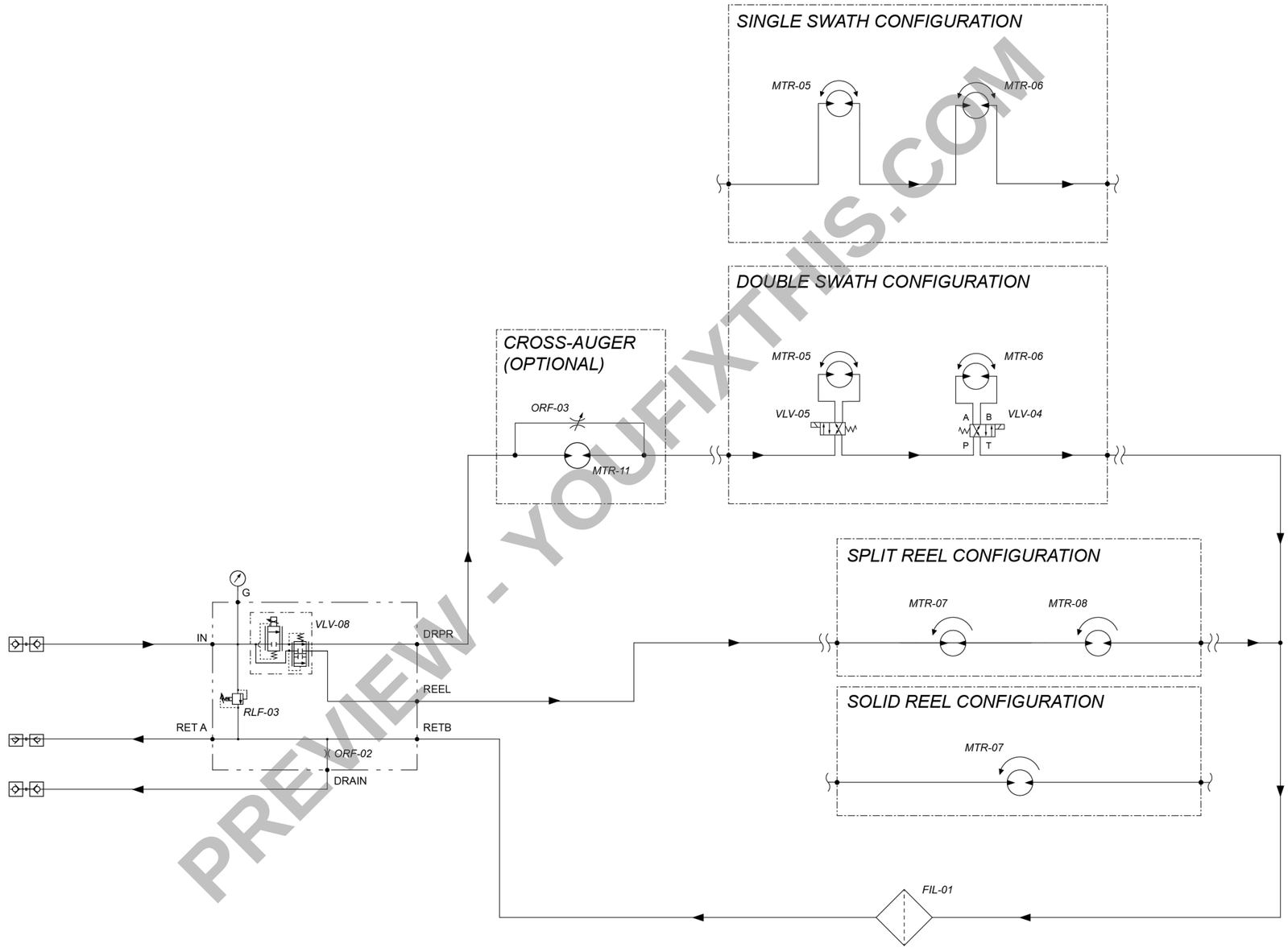

PREVIEW - YOUFIXTHIS.COM

NHIL16HT00331JB 1

Download full manual at youfixthis.com

NOTE: *In the Imperial units tables, the nominal sizes,* ***1/4 (0.25) in*** *(inch) and* ***5/16 (0.3125) in*** *(inch) hardware torque specifications are shown as a Newton meters (pound-inches) numerical value.*
Nominal sizes ***3/8 (0.375) in*** *(inch) through* ***1 (1.0) in*** *(inch) hardware torque specifications are shown as a Newton meters (pound-feet) numerical value.*

Inch hex head (non-flange) hardware

Plain (PLN) – an unplated hardware finish with residual manufacturing oils
Zinc-dichromate (ZND) – a yellow colored chemical plating formula yellow applied to the hardware

Nominal size	SAE Grade (GR) 5 bolt and nut	SAE Grade (GR) 8 bolt and nut	Locknut GR B w/ GR 5 bolt	Locknut GR C w/ GR 8 bolt
	PLN and ZND	PLN and ZND	ZND	ZND
	N·m (lb in)	N·m (lb in)	N·m (lb in)	N·m (lb in)
1/4 (0.25) in	13 (115)	18 (159)	7.2 (64)	10 (89)
5/16 (0.3125) in	27 (239)	38 (336)	14.9 (132)	21 (186)
	N·m (lb ft)	N·m (lb ft)	N·m (lb ft)	N·m (lb ft)
3/8 (0.375) in	47 (35)	67 (49)	26 (19)	37 (27)
7/16 (0.4375) in	76 (56)	107 (79)	42 (31)	59 (44)
1/2 (0.50) in	116 (85)	164 (121)	64 (47)	90 (67)
9/16 (0.5625) in	167 (123)	236 (174)	92 (68)	130 (96)
5/8 (0.625) in	231 (170)	326 (240)	127 (94)	179 (132)
3/4 (0.75) in	410 (302)	578 (426)	226 (166)	318 (234)
7/8 (0.875) in	660 (486)	931 (687)	363 (267)	512 (378)
1 (1.0) in	989 (729)	1396 (1030)	544 (401)	768 (567)

Inch flange head hardware

Plain (PLN) – an unplated hardware finish with residual manufacturing oils
Zinc-dichromate (ZND) – a yellow colored chemical plating formula yellow applied to the hardware

Nominal size	SAE Grade (GR) 5 bolt and nut	SAE Grade (GR) 8 bolt and nut	Flange locknut GR F w/ GR 5 bolt	Flange locknut GR G w/ GR 8 bolt
	PLN and ZND	PLN and ZND	ZND	ZND
	N·m (lb in)	N·m (lb in)	N·m (lb in)	N·m (lb in)
1/4 (0.25) in	14 (124)	20 (177)	15.4 (136)	22 (195)
5/16 (0.3125) in	29 (257)	42 (372)	32 (283)	46 (407)
	N·m (lb ft)	N·m (lb ft)	N·m (lb ft)	N·m (lb ft)
3/8 (0.375) in	52 (38)	74 (54)	57 (42)	81 (9)
7/16 (0.4375) in	84 (62)	118 (87)	92 (68)	130 (96)
1/2 (0.50) in	127 (94)	180 (133)	140 (103)	198 (146)
9/16 (0.5625) in	184 (136)	259 (191)	202 (150)	285 (210)
5/8 (0.625) in	254 (187)	358 (264)	279 (206)	394 (290)
3/4 (0.75) in	450 (332)	636 (469)	495 (365)	700 (516)
7/8 (0.875) in	725 (535)	1024 (755)	798 (589)	1126 (831)
1 (1.0) in	1088 (802)	1536 (1133)	1197 (882)	1690 (1246)

PREVIEW - YOUFIXTHIS.COM

Download full manual at youfixthis.com

Cylinders - Disassemble - Round wire ring style

NOTE: *A generic cylinder shown in this disassembly procedure.*

1. Clean the cylinder with **LOCTITE® ODC-FREE CLEANER AND DEGREASER** or an equivalent solvent-based cleaner to reduce the possibility of contamination and damage to the cylinder components.
2. Clamp the cylinder base **(1)** in a vice.

NOTE: *Use a block of wood to support the cylinder barrel closest to the head.*

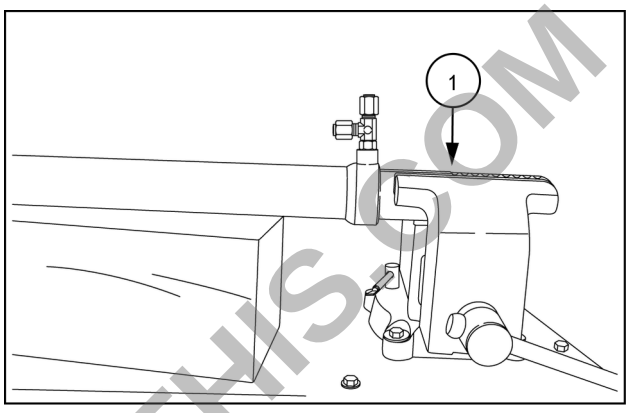

NHIL13RB02241AA 1

3. Remove the exterior retaining ring **(1)**.

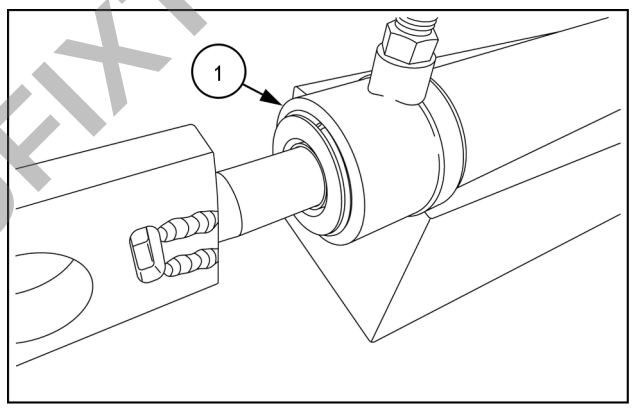

NHIL13RB02242AA 2

PREVIEW - YOUFIXTHIS.COM

Download full manual at youfixthis.com

Crop cutting - Troubleshooting

Problem	Possible Cause	Correction
Excessive noise.	Loose or damaged sections and/or guards.	Replace or tighten.
	First guard bent or out of alignment.	Straighten or replace.
	Knife drive bearing faulty.	Replace.
	Knife drive loose.	Tighten bolts and check for damage to housing.
	Knife drive running too fast.	Slow down to **680 – 720 RPM**.
	Knife head bushing sleeve worn out.	Replace.
	Knife head adjusted too high or too low.	Loosen clamp bolt on knife head bearing and adjust.
Knife leaves strip of crop standing.	Bent or broken guard.	Straighten or replace.
	Broken knife section.	Replace.
	Plugged guard.	Clean.
Knife will not run.	Low hydraulic oil.	Add oil. Determine cause of low oil.
	Low engine rpm.	Increase engine rpm.
	Faulty drive motor.	Repair or replace motor.
	Faulty knife drive.	Repair or replace.
	Faulty hydraulic pump.	Repair or replace.
	Cutter bar jammed.	Clean cutter bar. Check for damaged guards or sections.
Knife stalls easily.	Type of material being cut.	Reduce ground speed.
	Low oil volume (less than **14 US gpm**).	Check flow; should be **19.5 US gpm**.
	Low pressure at knife motor.	Check system pressure.
	Bent guards or cutter bar.	Repair or replace.
	Dull or wrong type of sections.	Replace sections.
	Faulty knife drive.	Check knife adjustment or knife drive bearing.
	Seized knife head bearing.	Replace.
	Knife head out of alignment.	Adjust alignment on knife head bearing.
	Unloaded system pressure too high.	Check for faulty draper. Check that all drapers are running freely.
	Relief valve stuck open.	Remove and clean cartridge.
Knife running too slow or too fast. (700 RPM recommended)	Low oil level.	Add oil.
	Relief valve stuck open.	Clean or replace cartridge.
	Worn pump or knife motor.	Repair or replace.
Excessive vibration.	Knife running too fast.	Check speed **(680 – 720 RPM**).
	Loose bearings in drive.	Replace bearings.
	Loose knife head bolts.	Tighten.
Connector bar breaks.	Damaged sections or guards.	Repair or replace.
	Knife gummed up.	Soak with diesel fuel.
	Section bolts not tight.	Tighten or replace.
	Sections on knife back installed on wrong side.	Remove sections, turn knife back over, and replace sections.
Knife head breaks.	Section bolts not tight.	Tighten and/or replace bolts.
	Knife gummed up.	Soak with diesel fuel.
	Damaged sections or guards.	Repair and/or replace.
	Sickle sections dull.	Replace sections.
	Tough crop.	Reduce speed.
	Knife drive running too fast.	Check speed with photo tach.
	Steel tines from reel hitting knife.	Raise reel.

PREVIEW - YOUFIXTHIS.COM

Download full manual at youfixthis.com

DuraSwath™ Model	421HB	425HB	430HB	436HB	440HB
Reel positioning	Hydraulic raise/lower and fore/aft adjustment				
Reel speed	Ground speed synchronized in auto or manual mode; variable from **100 – 130%** (up to **75 RPM**) of ground speed. Speed range is **10 – 75 RPM**.				
Reel drive	Solid reels equipped with single, hydraulic-driven, chain-and-sprocket reduction drive with **260 cm³** (**16 in³**) motor			Split reels equipped with two, hydraulic-driven, chain-and-sprocket reduction drive with **260 cm³** (**16 in³**) motors	

Specifications – Raptor™ Draper belts

DuraSwath™ Model	421HB	425HB	430HB	436HB	440HB
Raptor™ draper belts	**1066 mm** (**42 in**) rubberized polyester belt with fiberglass reinforcement, and tie-bar end connection				
Draper belt and roller guide design	V-guide on the upper end of the inner side of the belt with the V-groove in the rollers.				
Draper belt drive rolls	Rubber vulcanized steel drive roller, steel idler rollers				
Draper belt speed range	**0 – 232 m/min** (**0 – 760 ft/min**)				
Cleat design and height	**13 mm** (**0.5 in**) high cleat, with embedded fiberglass rod reinforcement				
Chaff barrier seal design	Continuous, **6.35 mm** (**0.25 in**) height, rubber, inverted V-shape barrier on the front edge of the outside of the belt, with minimal clearance to the draper guard.				

PREVIEW - YOUFIXTHIS.COM

Download full manual at youfixthis.com

Wire connectors - Component diagram 01 - Connectors X-010 to X-019

X-010 - Header knife speed sensor (87692855) (Female)

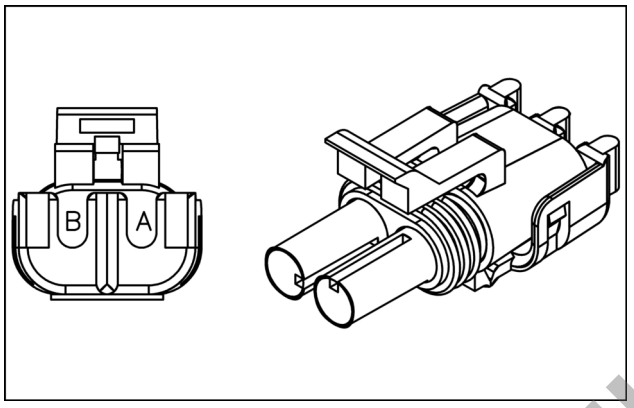

SL57_87692855 1

87692855

Pin	From	Wire	Description	Color-Size	Frame
A	**X-651B pin 1**	HC-007	Frequency input signal to Universal Control Module (UCM) for header knife speed sensor	BL - 1.0	**SHEET 01**
B	**X-651B pin 2**	HC-002	Ground reference	BR - 1.0	

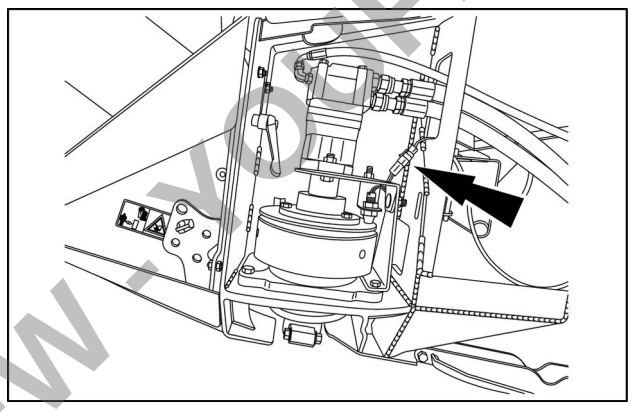

NHIL16HT00373AA 2

Connector X-010 connects to B-005 and is near the left-hand header knife drive motor.

PREVIEW - YOUFIXTHIS.COM

Download full manual at youfixthis.com

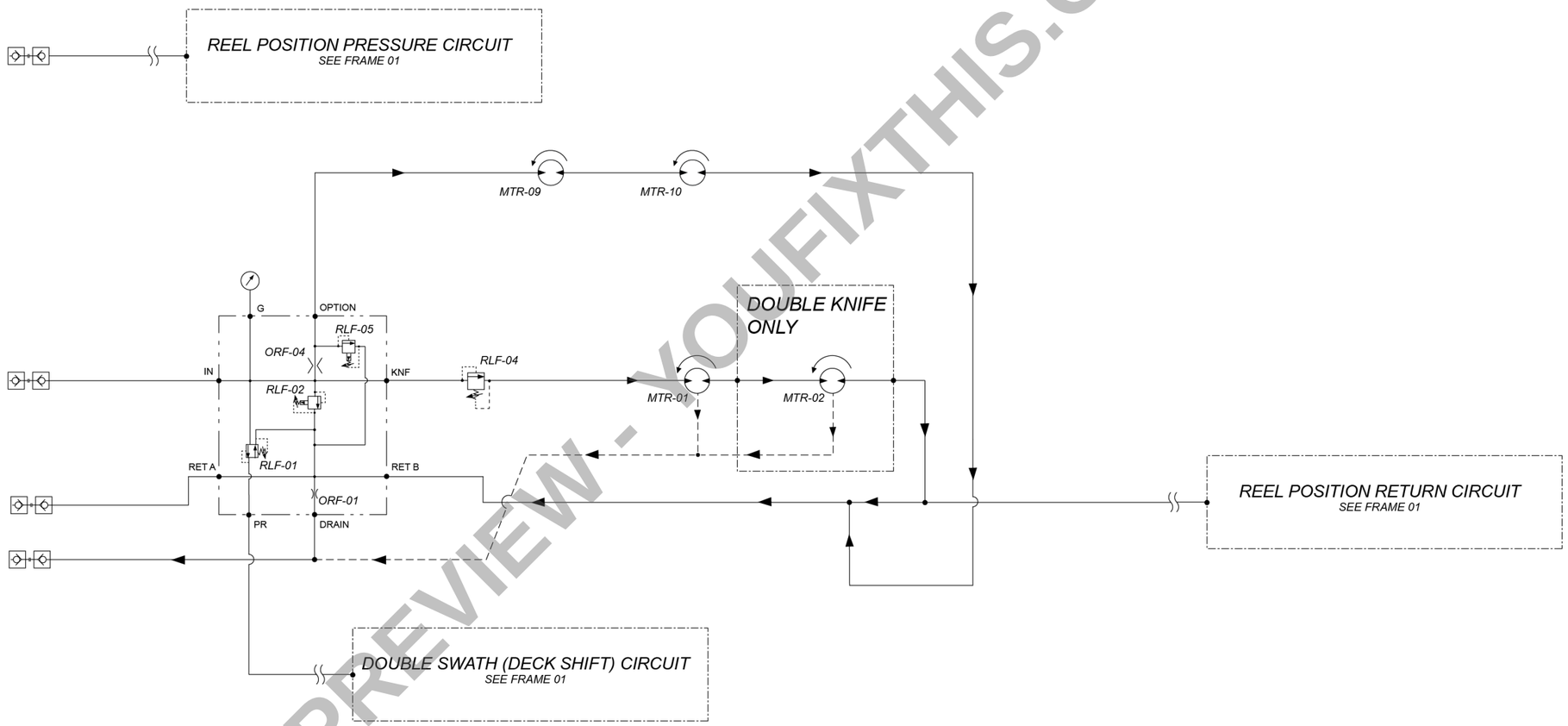

NHIL16HT00330JA 1

PREVIEW - YOUFIXTHIS.COM

Download full manual at youfixthis.com

Cylinders - Assemble - Round wire ring style

1. Install the new seals **(1)** and **(2)** over the piston **(3)**.

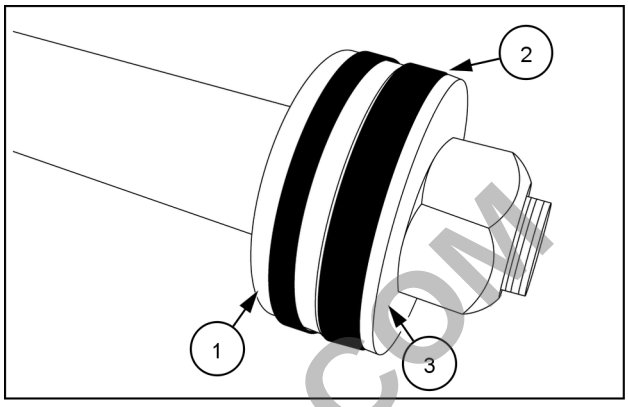

NHIL13RB02232AA 1

2. Install the O-ring **(1)** over the head **(2)** and onto the rod **(3)**.

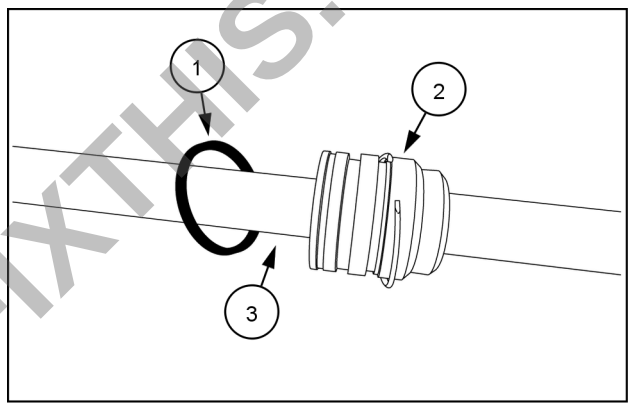

NHIL13RB02233AA 2

3. Use the hose clamp **(1)** that is supplied with the seal kit to compress the retaining ring into the grove on the head **(2)**.

NOTICE: *Make sure that the worm gear of the hose clamp is not aligned with the gap in the retaining ring.*

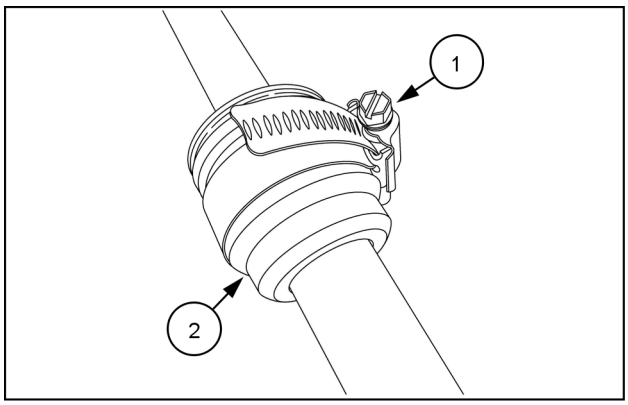

NHIL13RB02234AA 3

4. Place the rod **(1)** into the cylinder barrel **(2)**.

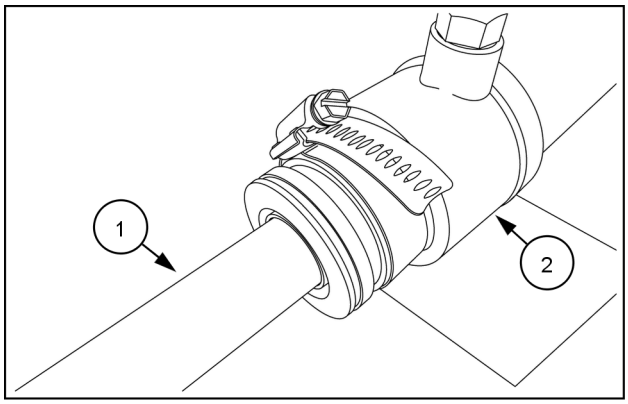

NHIL13RB02235AA 4

PREVIEW - YOUFIXTHIS.COM

Download full manual at youfixthis.com

Attachment/Header reel - Troubleshooting

Problem	Possible Cause	Correction
Reel will not hold height.	Leaking hose or fitting.	Repair or replace.
	Valve in windrower leaking.	See Windrower's Repair Manual.
Reel will not hold level.	Leaking hose or fitting.	Repair or replace.
	Air in system.	Bleed slave cylinder.
	Faulty master cylinder.	Repair or replace.
	Leaking cylinder seal.	Replace seal.
Reel raises or lowers erratically and/or reel will not raise.	Reel cylinders binding.	Replace cylinder.
	Arms bent or binding.	Repair or replace.
	Low hydraulic oil.	See Windrower's Repair Manual.
	Hydraulic couplers don't match.	Install correct couplers.
	Hydraulic couplers not engaged.	Re-couple properly.
	Contamination of solenoid valve.	Flush hydraulic system fluid and/or replace faulty valve.
	Faulty hydraulics.	See Windrower's Repair Manual.
Reel raises slowly.	Elbow in master cylinder too tight.	Loosen fitting.
Damage to center of reel.	Reel set too low.	Adjust height.
Reel hitting at end.	Reel not centered.	Adjust centering.
Reel will not turn or turns erratically.	Flow control set too low.	Advance setting.
	Faulty relief valve.	Clean or replace.
	Seized bearing(s).	Replace bearing(s).
	Faulty drive motor.	Replace motor.
	Reel tied down.	Release reel.
	Hydraulic couplers not engaged.	Re-couple properly.
Reel speed cannot be adjusted. - Header driven reel.	Poor connection in electrical wires or cable.	Check connections and cable.
	Defective reel speed motor.	Replace motor.
	Faulty flow control.	Replace flow control valve.

Attachment/Header reel - Troubleshooting - Single reel

Problem	Possible Cause	Correction
Reel does not raise level.	Air in system.	Bleed slave cylinder.
Right side goes up slow.	Air in system.	Bleed slave cylinder.
	Restricted hydraulic hose.	Replace hose.
Right side will not raise.	Leaking hose, fitting, or cylinder.	Repair or replace.
Left side goes up slow.	Faulty piston seal.	Replace seals.
Left side will not raise.	Faulty cylinder.	Replace cylinder.
	Faulty bypass port.	Replace cylinder.
	Faulty piston seal.	Replace seals.

Attachment/Header reel - Troubleshooting - Double reel

Problem	Possible Cause	Correction
Reel does not raise level.	Air in system.	Bleed slave cylinder.
Right side cylinder does not fully extend.	Air in system.	Bleed slave cylinder.
	Lift cylinders out of phase.	Install spacer inside center master cylinder.
Ends lift before center.	Center master cylinder O-ring damaged.	Replace seal.
Right-hand reel goes out of phase.	Air in system.	Bleed slave cylinder.
	System loses residual pressure.	Install spacer inside center master cylinder.

PREVIEW - YOUFIXTHIS.COM

Download full manual at youfixthis.com

Contents

INTRODUCTION

Hydraulic systems 35

[35.000] Hydraulic systems 35.1

[35.300] Reservoir, cooler, and filters 35.2

[35.420] Reel vertical positioning system 35.3

[35.430] Reel fore-and-aft positioning system 35.4

[35.518] Reel control system 35.5

[35.565] Cutter control circuit 35.6

[35.780] Feeder engagement system 35.7

[35.910] Head and header hydraulic drive 35.8

Frames and ballasting 39

[39.110] Drawbar and hitch assembly 39.1

[39.180] Endwise transport system frame 39.2

Wheels 44

[44.534] Endwise transport system wheels 44.1

[44.536] Gauge wheels 44.2

Electrical systems 55

[55.000] Electrical system 55.1

[55.100] Harnesses and connectors 55.2

[55.511] Light harnesses 55.3

[55.404] External lighting 55.4

[55.675] Reel speed and position control 55.5

[55.421] Feeding control system 55.6

[55.820] Chopping and cutting control systems 55.7

Attachments/Headers 58

[58.000] Cutting 58.1

PREVIEW - YOUFIXTHIS.COM

Download full manual at youfixthis.com

Safety rules

Personal safety



This is the safety alert symbol. It is used to alert you to potential personal injury hazards. Obey all safety messages that follow this symbol to avoid possible death or injury.

Throughout this manual you will find the signal words DANGER, WARNING, and CAUTION followed by special instructions. These precautions are intended for the personal safety of you and those working with you.

Read and understand all the safety messages in this manual before you operate or service the machine.

DANGER indicates a hazardous situation that, if not avoided, will result in death or serious injury.

WARNING indicates a hazardous situation that, if not avoided, could result in death or serious injury.

CAUTION indicates a hazardous situation that, if not avoided, could result in minor or moderate injury.

FAILURE TO FOLLOW DANGER, WARNING, AND CAUTION MESSAGES COULD RESULT IN DEATH OR SERIOUS INJURY.

Machine safety

NOTICE: *Notice indicates a situation that, if not avoided, could result in machine or property damage.*

Throughout this manual you will find the signal word Notice followed by special instructions to prevent machine or property damage. The word Notice is used to address practices not related to personal safety.

Information

NOTE: *Note indicates additional information that clarifies steps, procedures, or other information in this manual.*

Throughout this manual you will find the word Note followed by additional information about a step, procedure, or other information in the manual. The word Note is not intended to address personal safety or property damage.

PREVIEW - YOUFIXTHIS.COM

Download full manual at youfixthis.com

[58.101] Attachment/Header reel 58.2
[58.105] Attachment/Header reel control system 58.3
[58.110] Attachment/Header cutting mechanism 58.4
[58.130] Attachment/Header frame 58.5
[58.150] Cross-auger 58.6
[58.900] Belt feeding 58.7
Platform, cab, bodywork, and decals 90
[90.105] Machine shields and guards 90.1

PREVIEW - YOUFIXTHIS.COM

Download full manual at youfixthis.com

Cylinders - Remove - CYL-01 - Left-hand reel lift cylinder

⚠ WARNING

Escaping fluid!
Hydraulic fluid or diesel fuel leaking under pressure can penetrate the skin and cause infection or other injury. To prevent personal injury: Relieve all pressure before disconnecting fluid lines or performing work on the hydraulic system. Before applying pressure, make sure all connections are tight and all components are in good condition. Never use your hand to check for suspected leaks under pressure. Use a piece of cardboard or wood for this purpose. If injured by leaking fluid, see your doctor immediately.
Failure to comply could result in death or serious injury.

W0178A

1. Make sure that the reel is fully lowered.
2. Use an overhead or portable hoist to support the reel arm **(1)**.
3. Disconnect the hydraulic hoses **(2)** from the left-hand cylinder.
4. Remove the top pin **(3)** and the bottom pin **(4)** and then remove the left-hand cylinder.

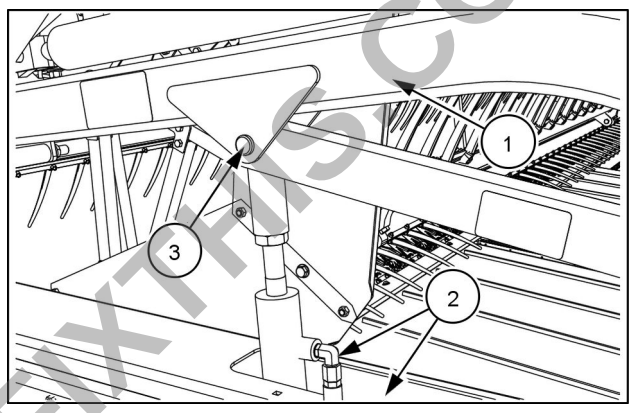

NHIL16HT00374AA 1

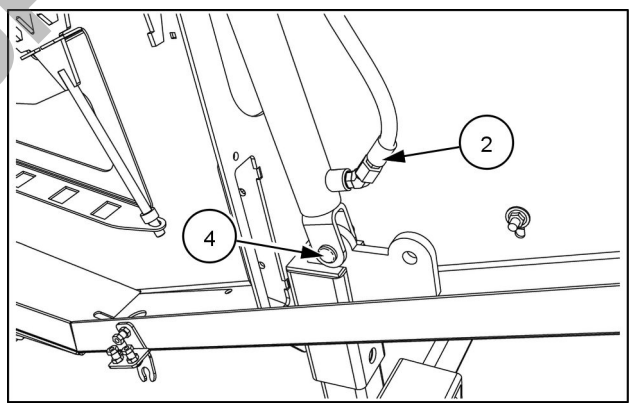

NHIL16HT00375AA 2

PREVIEW - YOUFIXTHIS.COM

Download full manual at youfixthis.com

Cross auger control valve - Adjust

The cross auger speed is controlled by a manually adjustable needle valve on the cross auger motor.

- To increase the speed of cross auger rotation, rotate the handle clockwise.
- To decrease the speed of the cross auger rotation, rotate the handle counter clockwise.
- To stop the cross auger rotation, rotate the handle counter clockwise until finger tight.

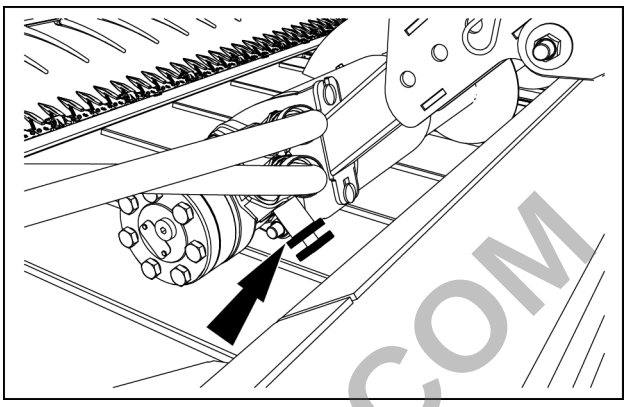

NHIL14HT01139 1

PREVIEW - YOUFIXTHIS.COM

Download full manual at youfixthis.com

Contents

Electrical systems - 55

[55.000] Electrical system 55.1

[55.100] Harnesses and connectors..... 55.2

[55.511] Light harnesses 55.3

[55.404] External lighting 55.4

[55.675] Reel speed and position control..... 55.5

[55.421] Feeding control system 55.6

[55.820] Chopping and cutting control systems 55.7

PREVIEW - YOUFIXTHIS.COM

Download full manual at youfixthis.com

Electrical components - ECU description

A-030 - Lighting control module (Module)

Component Type	Module
Wiring frames	**Wiring harnesses - Electrical schematic sheet 02 (55.100)**
Connectors	**X-702** **X-703**

PREVIEW - YOUFIXTHIS.COM

Download full manual at youfixthis.com

Reel - Disassemble - HB reel

1. Complete disassembly of the reel requires removal of the reel. See **Reel - Remove (58.101)**. The removal of some components may be done while the reel is mounted to the header.

End shields

NOTE: *There are end shields at both outward ends of the reel. Repeat the steps **2**– **4** below for both ends of the reel.*

2. Loosen and remove the two bolts **(1)** that secure the end shields **(2)** to the reel bat bearing holders.
3. Loosen and remove the two bolts that secure the end shield to the neighboring end shields.
4. Repeat until all end shields are separated.

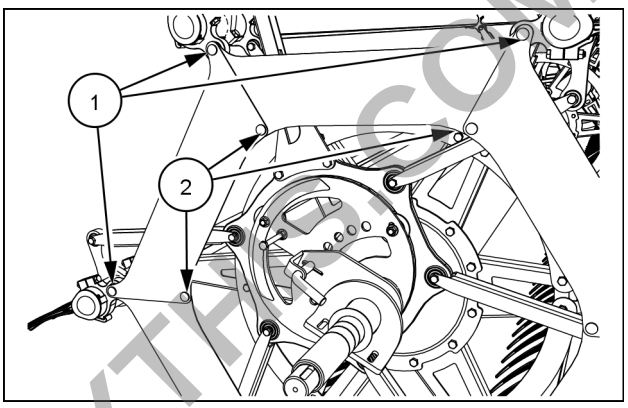

NHIL17HT00107AA 1

Reel mount

NOTE: *The tube clamp is very similar from one end of the reel to the other. Repeat the steps below to remove both tube clamps.*

5. Remove the snap ring and washers **(1)** from the reel shaft.
6. Slide the mounting bracket **(2)** from the tube of the control plate.

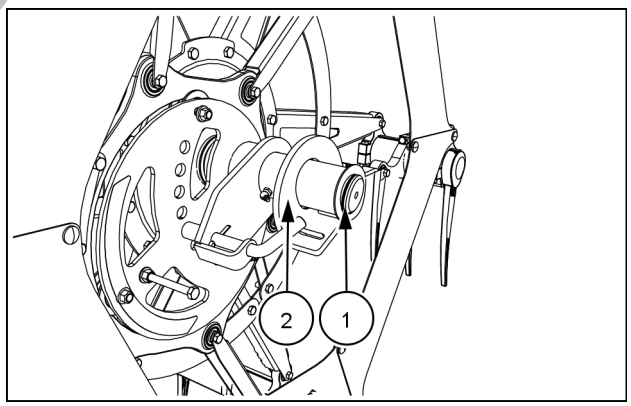

NHIL17HT00108AA 2

PREVIEW - YOUFIXTHIS.COM

Download full manual at youfixthis.com

Sickle cutterbar - Remove - Knife guards - Standard guard system

NOTE: *Different locations on the cutterbar use different kinds of knife guards. Make sure to replace the knife guard with the appropriate replacement part and mount in the correct location All knife guards mount in a similar fashion but may require either two or three mounting bolts.*

1. Remove the mounting bolts **(1)** and nuts **(2)** from the knife guard to be replaced.
2. Remove the knife guard.

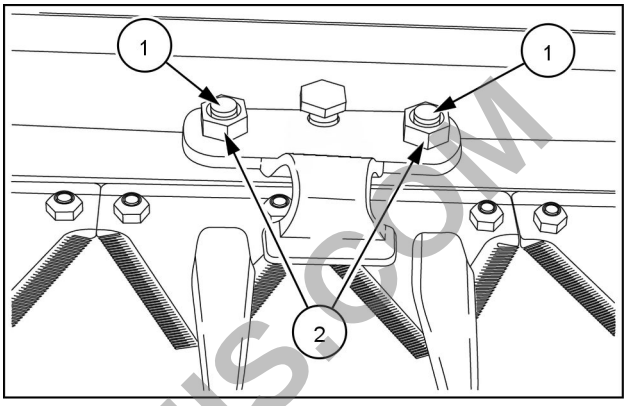

NHIL13HT00602AB 1

PREVIEW - YOUFIXTHIS.COM

Download full manual at youfixthis.com

PREVIEW ONLY

You're viewing 25 of 519 pages

The full manual includes:

- All 519 pages, complete
- Searchable PDF (find any keyword)
- No watermarks
- Instant download
- Print-ready quality

GET FULL MANUAL NOW

New Holland 421HB, 425HB, 430HB, 436HB, 440HB, DuraSwath 421HB, DuraSwath 425HB, DuraSwath 430HB, DuraSwath 436HB, DuraSwath 440HB Service Manual



Scan or click anywhere
youfixthis.com

Click anywhere on this page to get the full manual