Dimensions

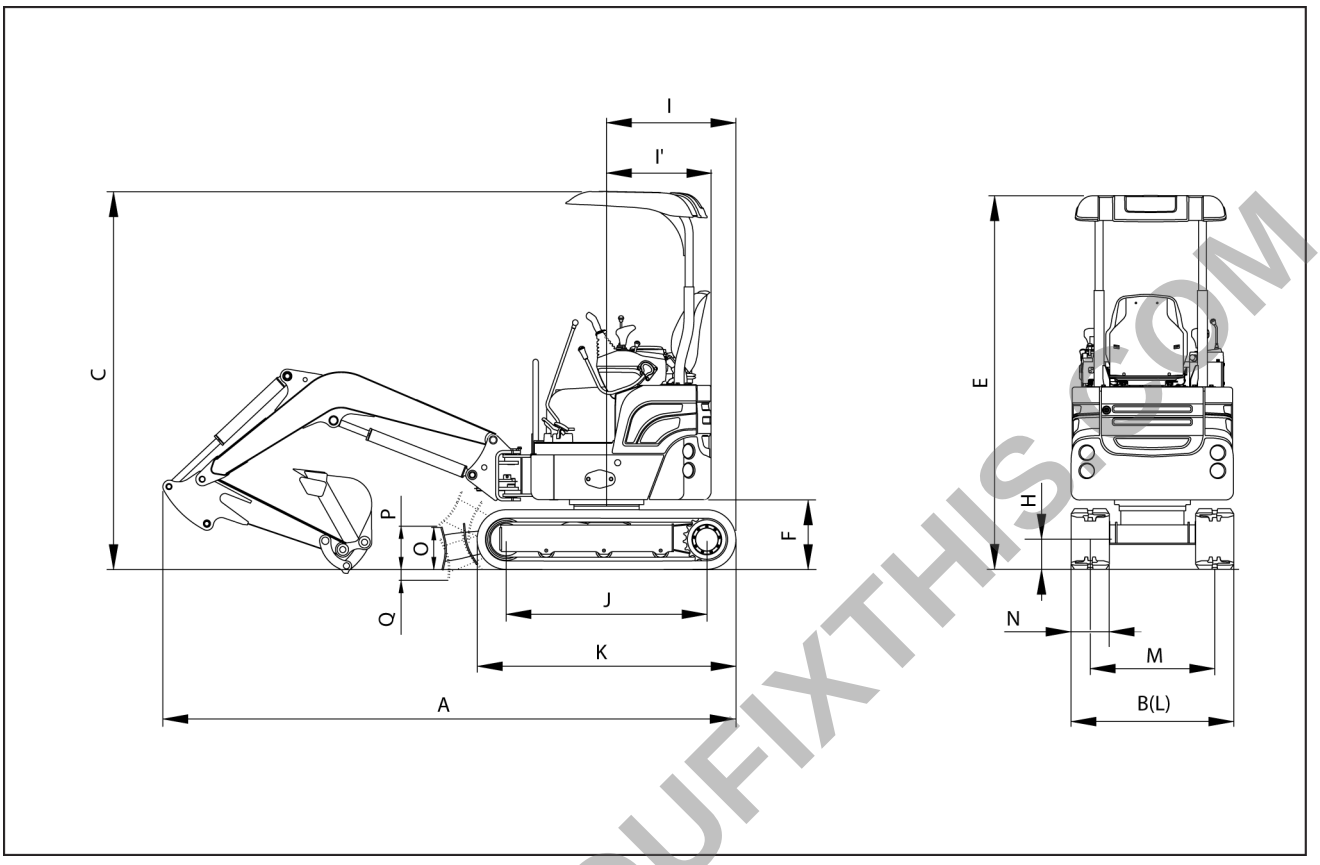

SMIL16MEX2536FA 1

Operating weight	**1700 kg** (**3748 lb**)
(A) Overall length	**3480 mm** (**137.0 in**)
(B) Overall width, with **230 mm** (**9.1 in**) shoe	**990 – 1300 mm** (**39.0 – 51.2 in**)
(C) Overall height	**2320 mm** (**91.3 in**)
(E) Overall height of canopy	**2320 mm** (**91.3 in**)
(F) Ground clearance of counterweight	**440 mm** (**17.3 in**)
(H) Minimum ground clearance	**170 mm** (**6.7 in**)
(I) Rear-end distance	**645 mm** (**25.4 in**)
(I') Rear-end swing radius	**645 mm** (**25.4 in**)
(J) Distance between tumblers	**1230 mm** (**48.4 in**)
(K) Undercarriage length	**1590 mm** (**62.6 in**)
(L) Undercarriage width (extension crawler)	**990 – 1300 mm** (**39.0 – 51.2 in**)
(M) Track gauge (extension crawler)	**760 – 1070 mm** (**29.9 – 42.1 in**)
(N) Track shoe width, standard	**230 mm** (**9.1 in**)
(O) Height of blade	**250 mm** (**9.8 in**)
(P) Ground clearance of blade up	**285 mm** (**11.2 in**)
(Q) Depth of blade down	**225 mm** (**8.9 in**)

Boom length: **1.80 m** (**70.87 in**)
Arm length: **0.96 m** (**37.80 in**)
With boom swing post

PREVIEW - YOUFIXTHIS.COM

Download full manual at youfixthis.com

Engine - Engine horse power

Performances

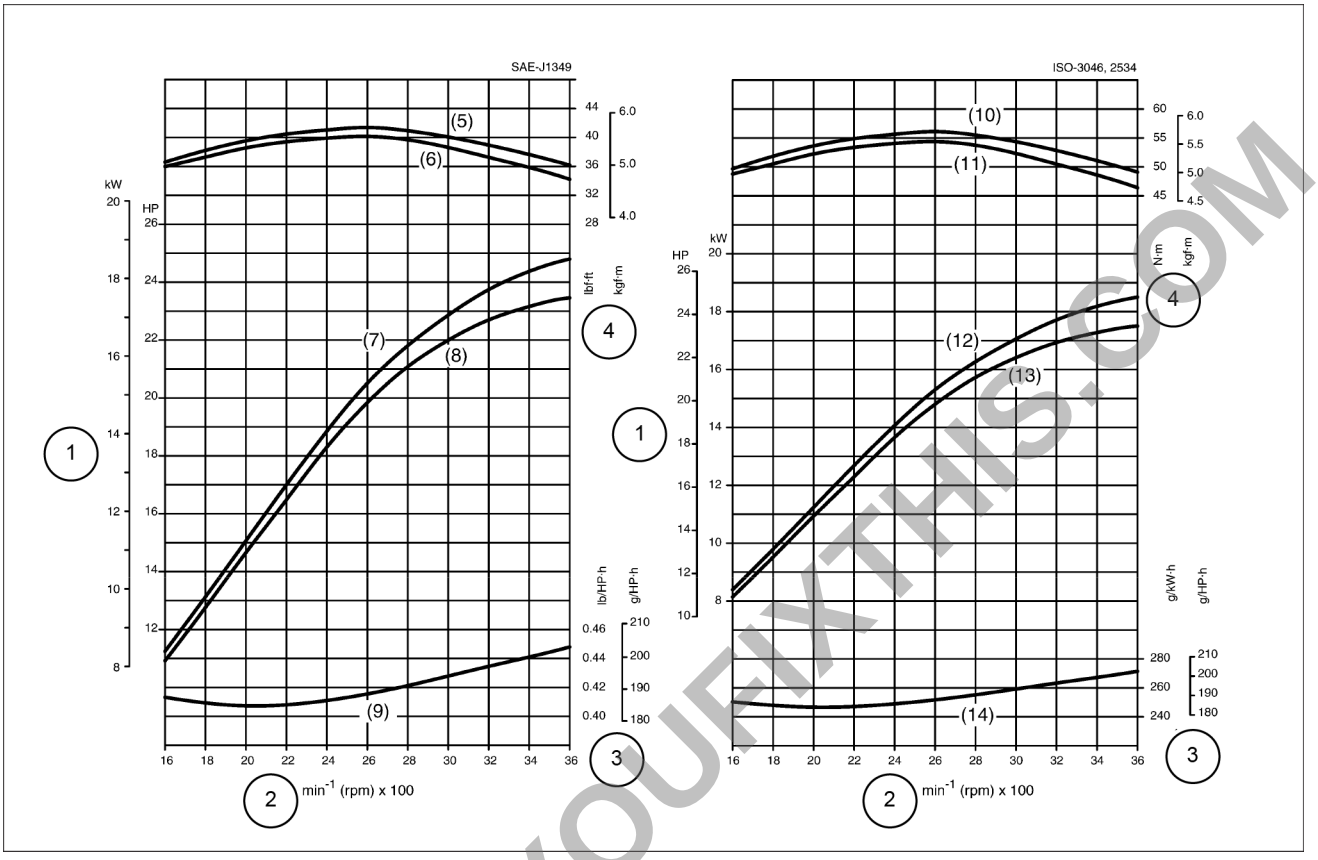

SMIL17MEX0595FB 1

NOTE: *performances detected at engine test bench.*

1. Brake Horse Power (BHP)
2. Engine speed
3. Brake Specific Fuel Consumption (BSFC)
4. Torque
5. Gross intermittent torque
6. Net intermittent torque
7. Gross intermittent BHP
8. Net intermittent BHP
9. Net intermittent BSFC
10. Gross torque
11. Overload torque
12. Gross BHP
13. Overload BHP
14. Overload BSFC

PREVIEW - YOUFIXTHIS.COM

Download full manual at youfixthis.com

6. Place a receptacle of a suitable capacity under the drain plug **(1)**.
7. Use a wrench [**19 mm**] to remove the drain plug **(1)** and drain the fuel.
8. After draining, close the drain plug **(1)**.

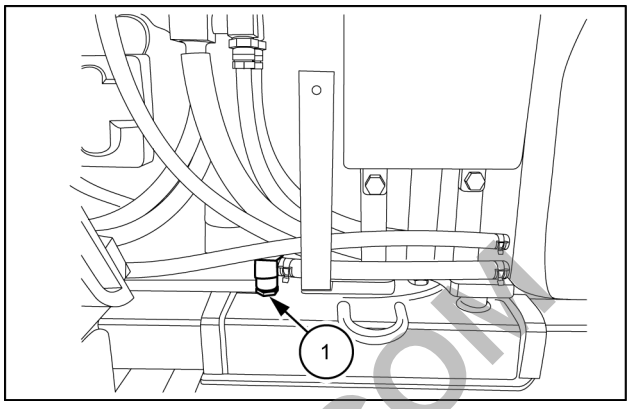

SMIL17MEX0210AB 4

9. Disconnect the fuel level sensor connector **CD-2 (1)** from the fuel tank.

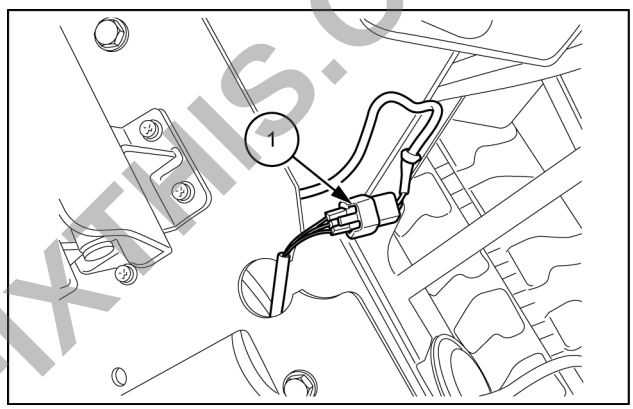

SMIL17MEX0211AB 5

10. Use a wrench [**13 mm**] to remove the fuel hose **(1)** from the bracket.
11. Loosen the clamp to remove the fuel hose **(2)** from the tank.

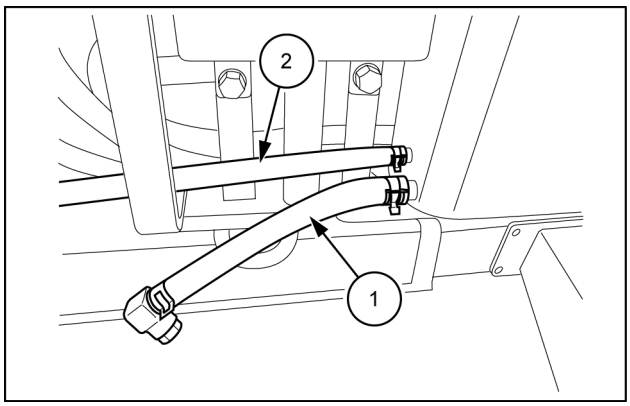

SMIL17MEX0212AB 6

PREVIEW - YOUFIXTHIS.COM

Download full manual at youfixthis.com

Engine cooling system - Change fluid - Radiator coolant

⚠ WARNING

Hazardous chemicals!
Coolant can be toxic. Avoid contact with skin, eyes, and clothing. Antidotes:
EXTERNAL - Rinse thoroughly with water. Remove soiled clothing.
INTERNAL - Rinse the mouth with water. DO NOT induce vomiting. Seek immediate medical attention.
EYES - Flush with water. Seek immediate medical attention.
Failure to comply could result in death or serious injury.

W0282A

⚠ CAUTION

Burn hazard!
Hot coolant can spray out if you remove the filler cap while the system is hot. After the system has cooled, turn the filler cap to the first notch and wait for all pressure to release before proceeding.
Failure to comply could result in minor or moderate injury.

C0043A

Draining the radiator

1. Open the engine access door to access to the radiator.
2. Remove the radiator cap.

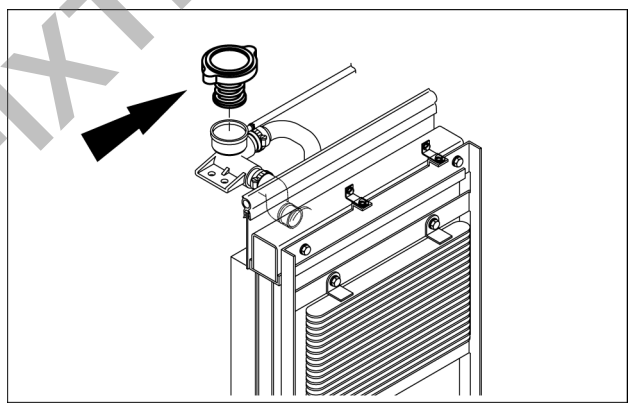

SMIL16MEX2529AB 1

3. Place a container with a capacity of **10 L** (**2.6 US gal**) under the radiator drain plug.
4. Drain the engine coolant by opening the drain valve on the radiator and the drain cock on the engine.
5. Close the drain valve on the radiator and the drain cock on the engine.

NOTICE: *after draining coolant, do not start the engine with no water in the radiator. Failure to observe this causes damage to the engine.*

NOTE: *drained coolant should be disposed of by the specified method.*

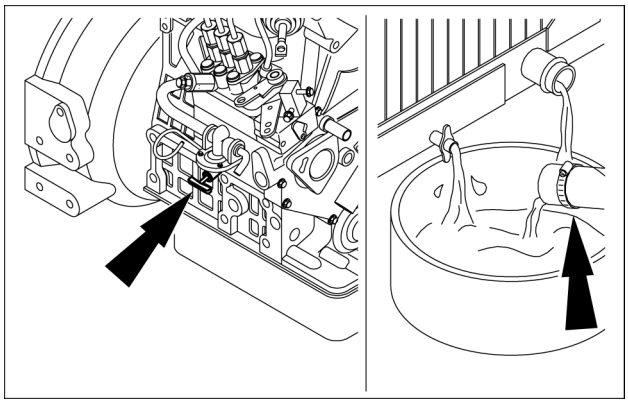

SMIL16MEX2530AB 2

PREVIEW - YOUFIXTHIS.COM

Download full manual at youfixthis.com

Hydraulic systems - Overview

Top view

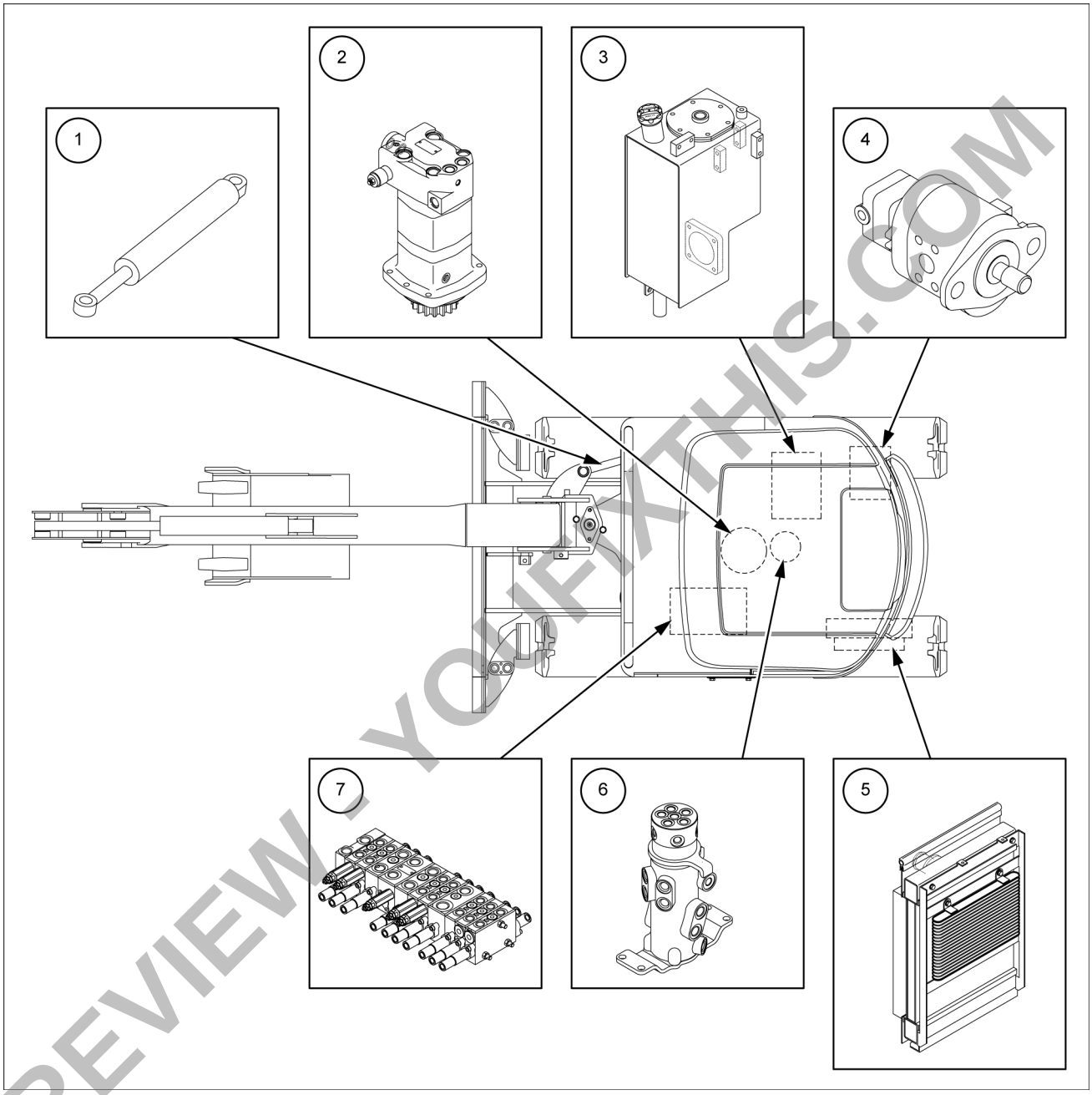

SMIL18MEX0720GB 1

	Component	Reference
1.	Boom swing cylinder	• **Swing cylinder - Sectional view (35.739)**
2.	Hydraulic swing motor	• **Hydraulic swing system - Overview (35.352)** • **Hydraulic swing system - Dynamic description (35.352)**
3.	Hydraulic oil reservoir	–
4.	Main pump	• **Pump - Overview (35.106)** • **Pump - Dynamic description (35.106)**
5.	Oil cooler	–
6.	Hydraulic swivel	• **Hydraulic swivel - Overview (35.354)**
7.	Main control valve	• **Stacked control valves - Overview (35.359)**

PREVIEW - YOUFIXTHIS.COM

Download full manual at youfixthis.com

Pump - Overview

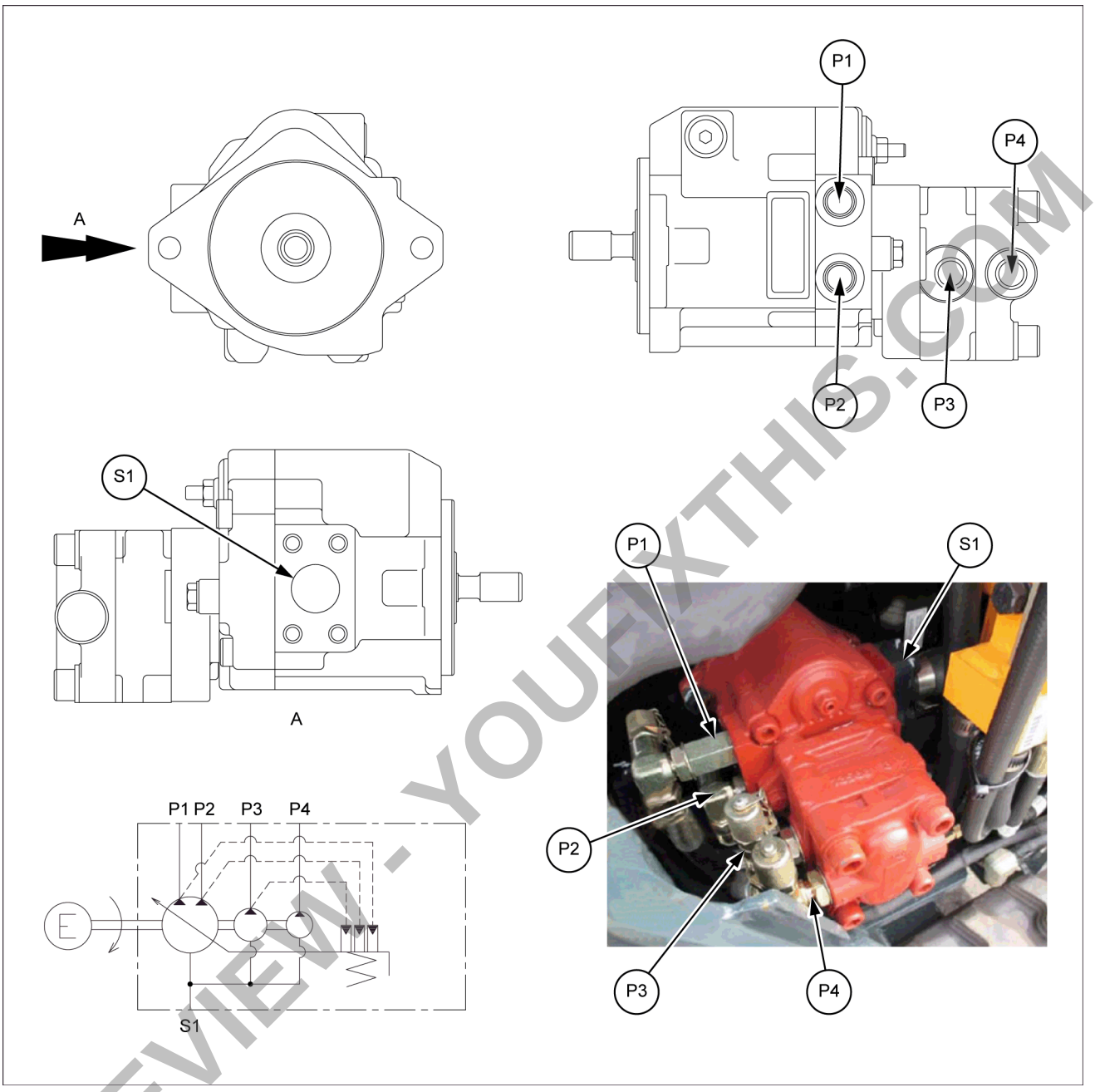

SMIL18MEX0769GB 1

Port	Port name	Port size	Function
S1	Suction port	SAE 1	Inlet port
P1, P2	Discharge port	PF 3/8	Travel, Boom, Arm, Bucket and Option
P3	Discharge port	PF 3/8	Swing, Boom swing, Dozer
P4	Discharge port	PF 3/8	Pilot pressure line

PREVIEW - YOUFIXTHIS.COM

Download full manual at youfixthis.com

Pilot solenoid valve block - General specification

Data below mentioned are valid for both types of pilot solenoid valve described in this chapter.

Hydraulic specifications

Inlet flow	**15.0 L/min** (**4.0 US gpm**)
Max working pressure	**60 bar** (**870 psi**)
Relief valve setting	**33.5 – 36.5 bar** (**485.8 – 529.2 psi**) at **6.0 L/min** (**1.6 US gpm**)
Operating temperature range	**(-20) – (100) °C**

Hydraulic schematic

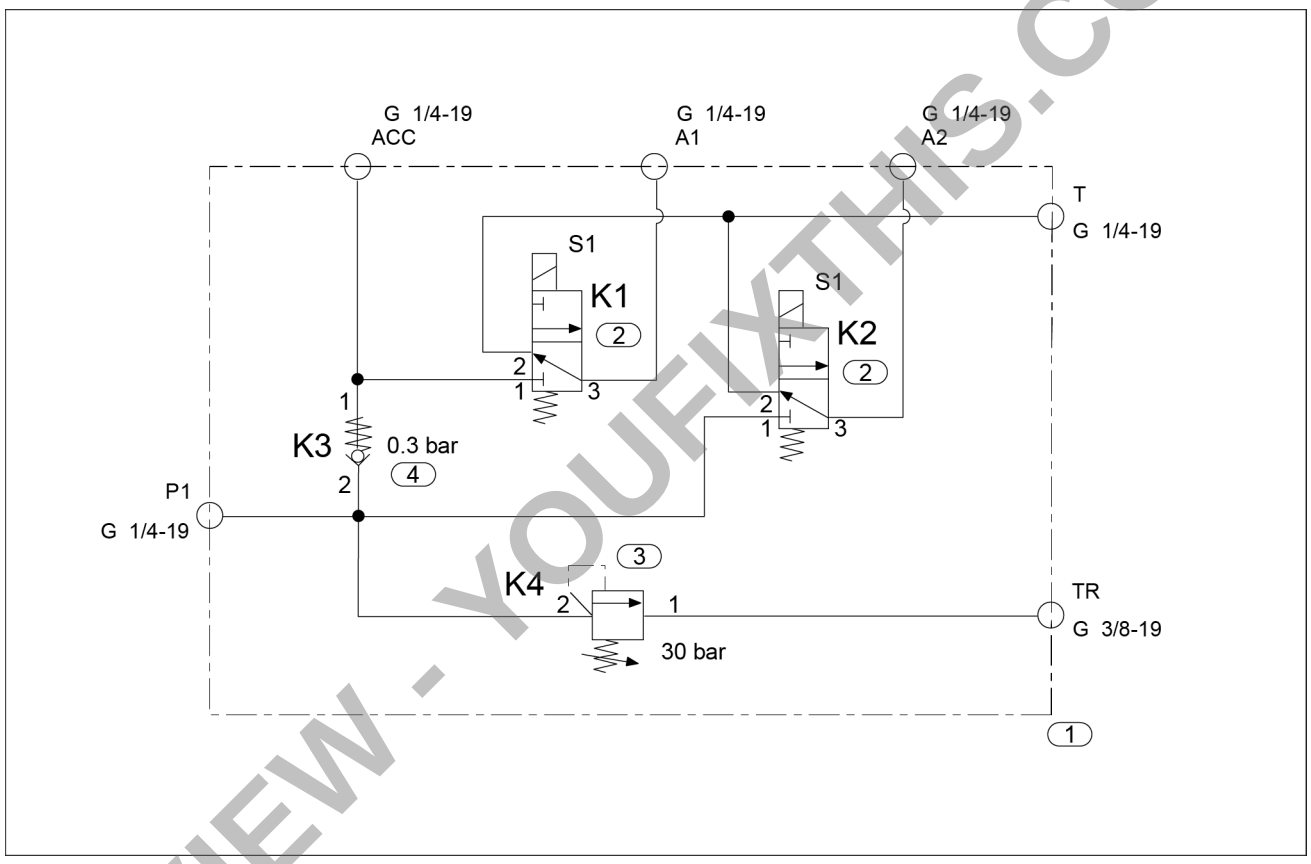

SMIL19MEX0653FA 1

Refer to **Pilot solenoid valve block - Overview (35.357)** for details of ports.

PREVIEW - YOUFIXTHIS.COM

Download full manual at youfixthis.com

Hydraulic swing system - Overview

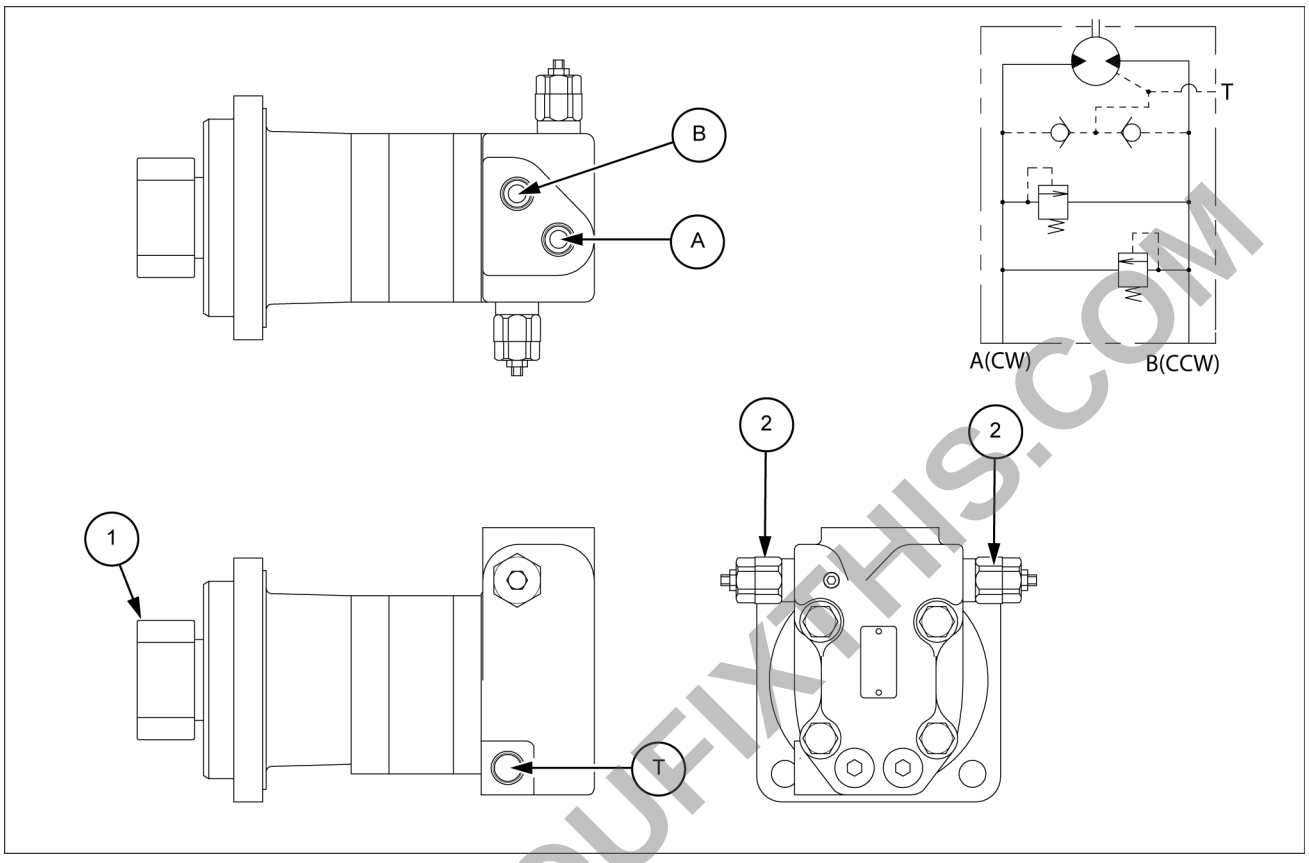

SMIL17MEX0802FB 1

1. Output shaft
2. Relief valve

Port	Port name	Port size
A	Main port	G 3/8
B	Main port	G 3/8
T	Drain port	G 3/8

PREVIEW - YOUFIXTHIS.COM

Download full manual at youfixthis.com

HYDRAULIC MOTOR SECTION

Function

This hydraulic motor is an axial piston type, and changes the hydraulic energy supplied from the pump to the rotary motion.

Structure

Through a hydraulic valve, the pressurized oil is supplied to the valve plate **(5)**. When the pressurized oil is supplied to the A port, this pressurized oil pushes the piston **(6)** in the cylinder barrel **(4)**. This pushing force is changed to the rotational power by the swash plate **(7)** and transmitted to the shaft **(3)** which is connected to the cylinder barrel **(4)** with the spline. The return flow from the cylinder port is going out through the B port of the valve plate **(5)**. To reverse rotation, pressurized oil is supplied to the B port and returning oil exits through the A port.

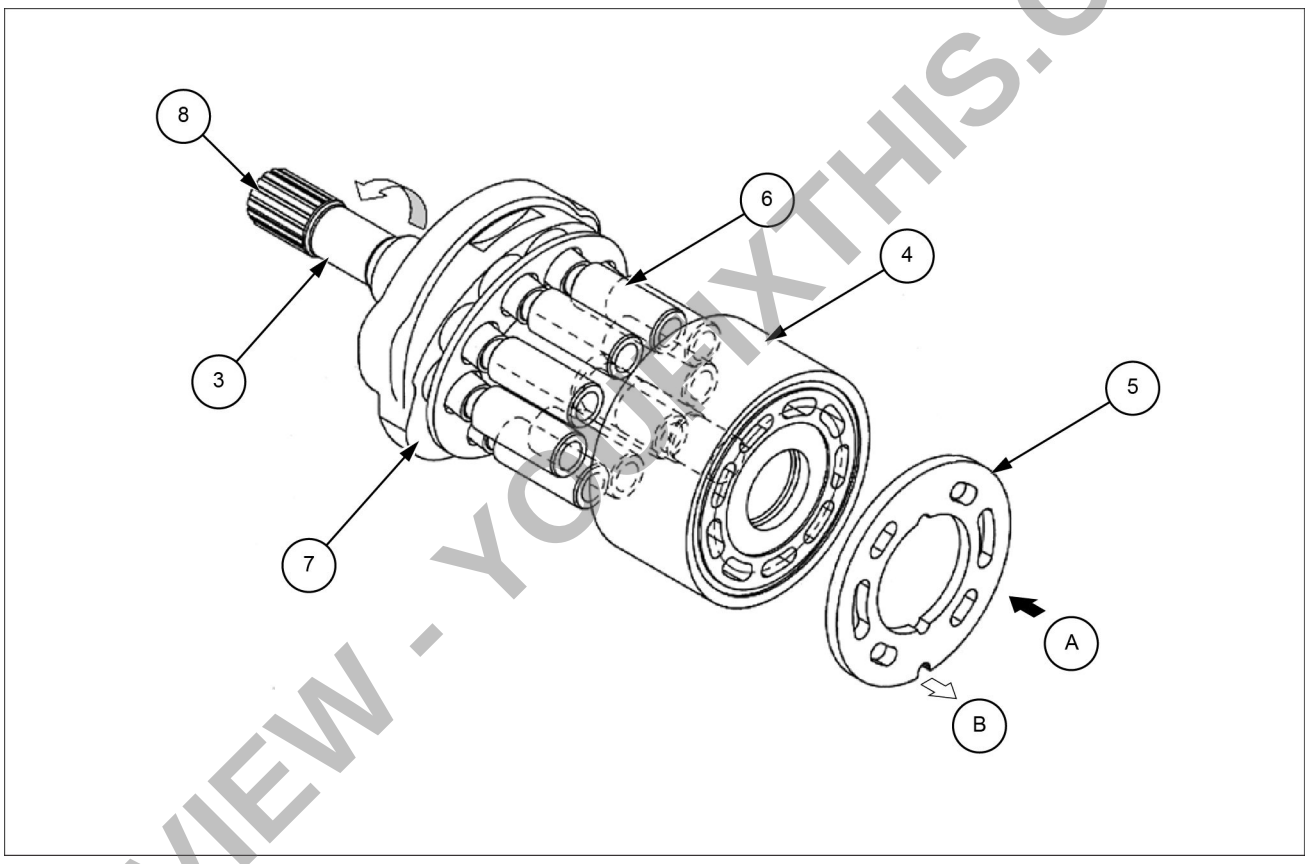

SMIL17MEX1019FB 2

3. Shaft
4. Cylinder barrel
5. Valve plate
6. Piston
7. Swash plate
8. S2 gear is united motor shaft or connected to motor shaft with spline

PREVIEW - YOUFIXTHIS.COM

Download full manual at youfixthis.com

8. Use a wrench [**17 mm**] to remove the bolts **(1)** and then remove the cylinder external cover **(2)** and the lower cover **(3)**.

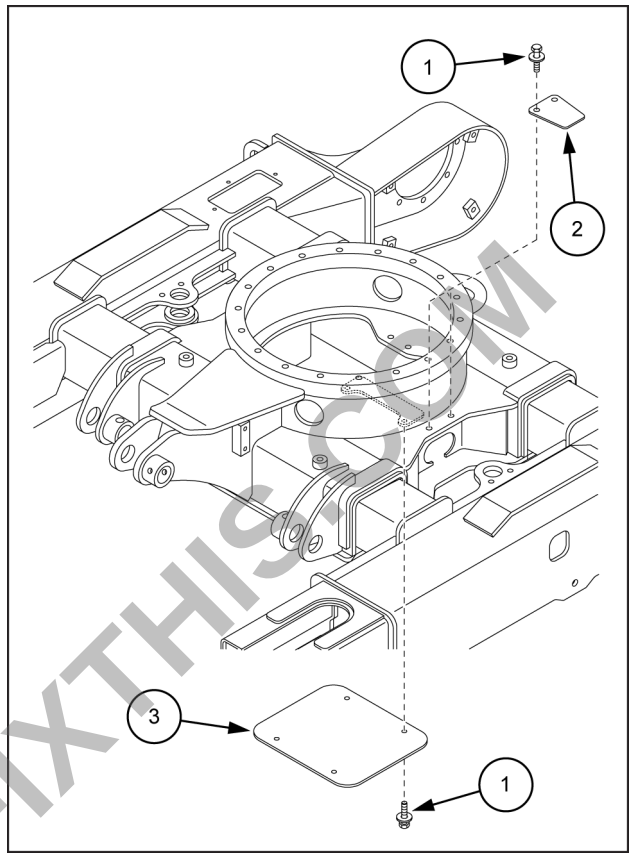

SMIL17MEX2927BB 4

9. Use a wrench [**17 mm**] to remove the four bolts **(1)** in order to remove the travel motor cover **(2)**.
10. Remove the four hoses **(4)** from the travel motor **(3)**.
    - Mark the hoses so that the connectors match at the time of assembly.
    - Clean the hoses and the lines by spraying them with a parts cleaner to prevent scratches and prevent dirt from accumulating on the connectors.
    - Use caps or plugs to cover the hoses and lines to prevent any entry of water, dust or dirt.

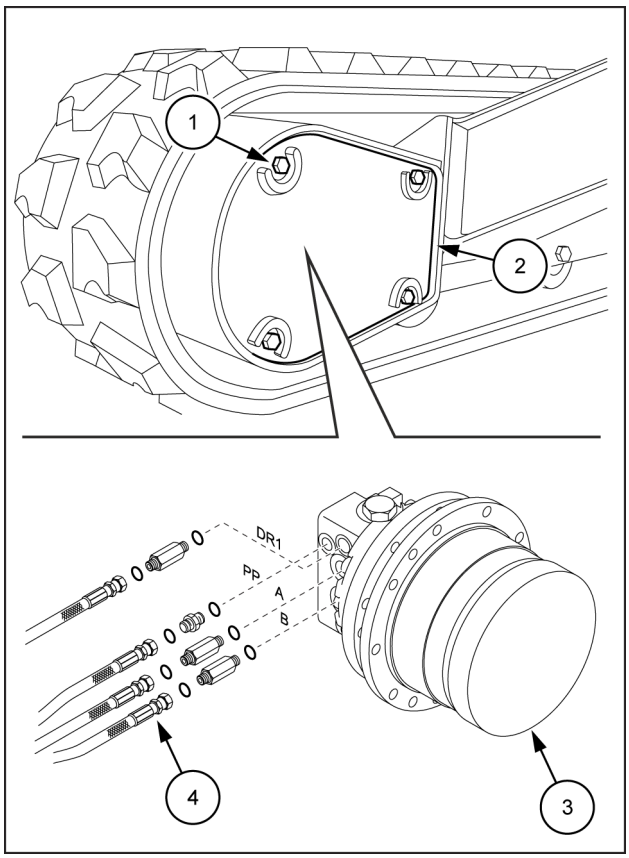

SMIL17MEX2932BB 5

PREVIEW - YOUFIXTHIS.COM

Download full manual at youfixthis.com

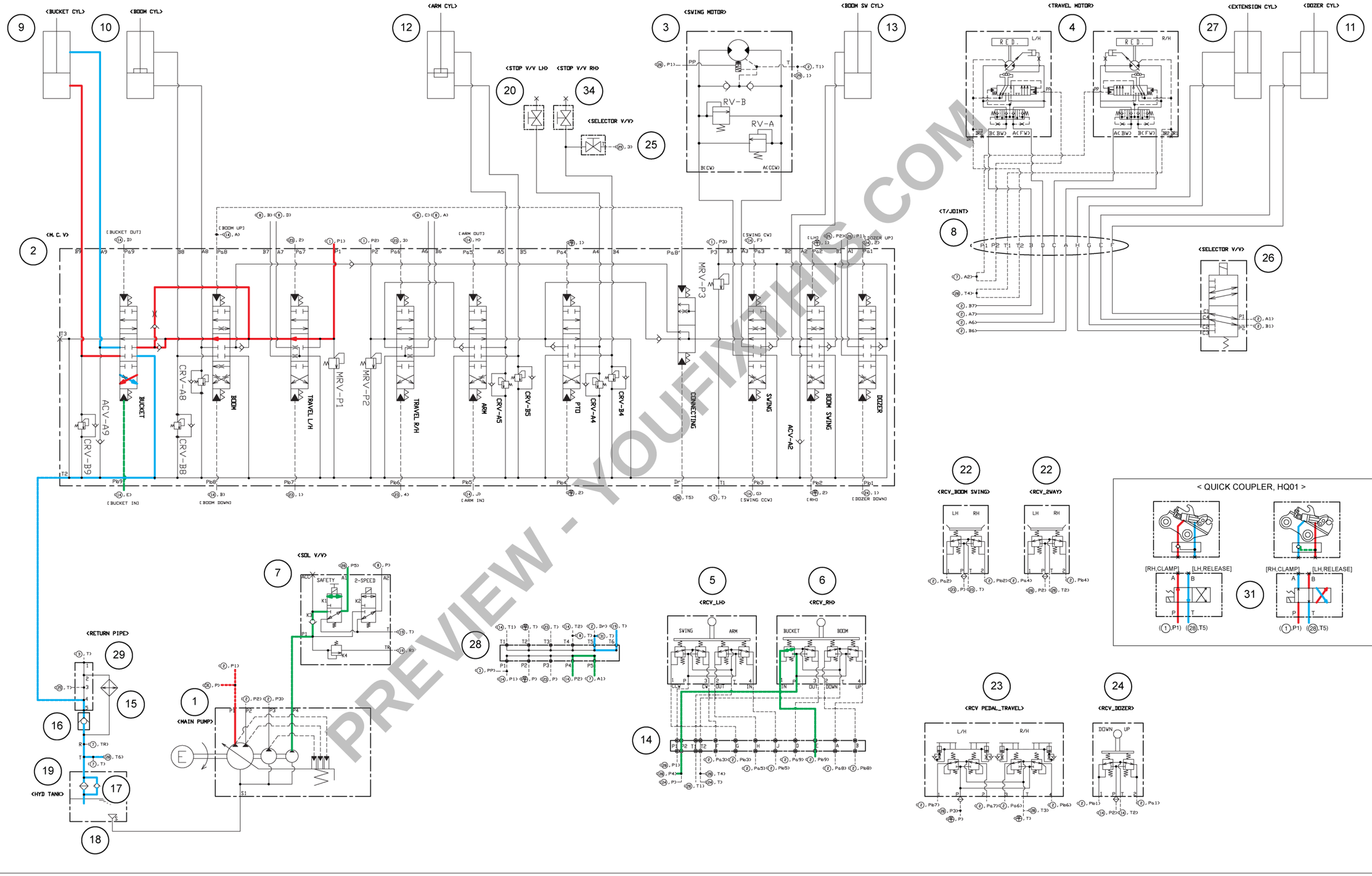

PREVIEW - YOUFIXTHIS.COM

Download full manual at youfixthis.com

Swing cylinder - Service limits - Cylinders pins and bushings

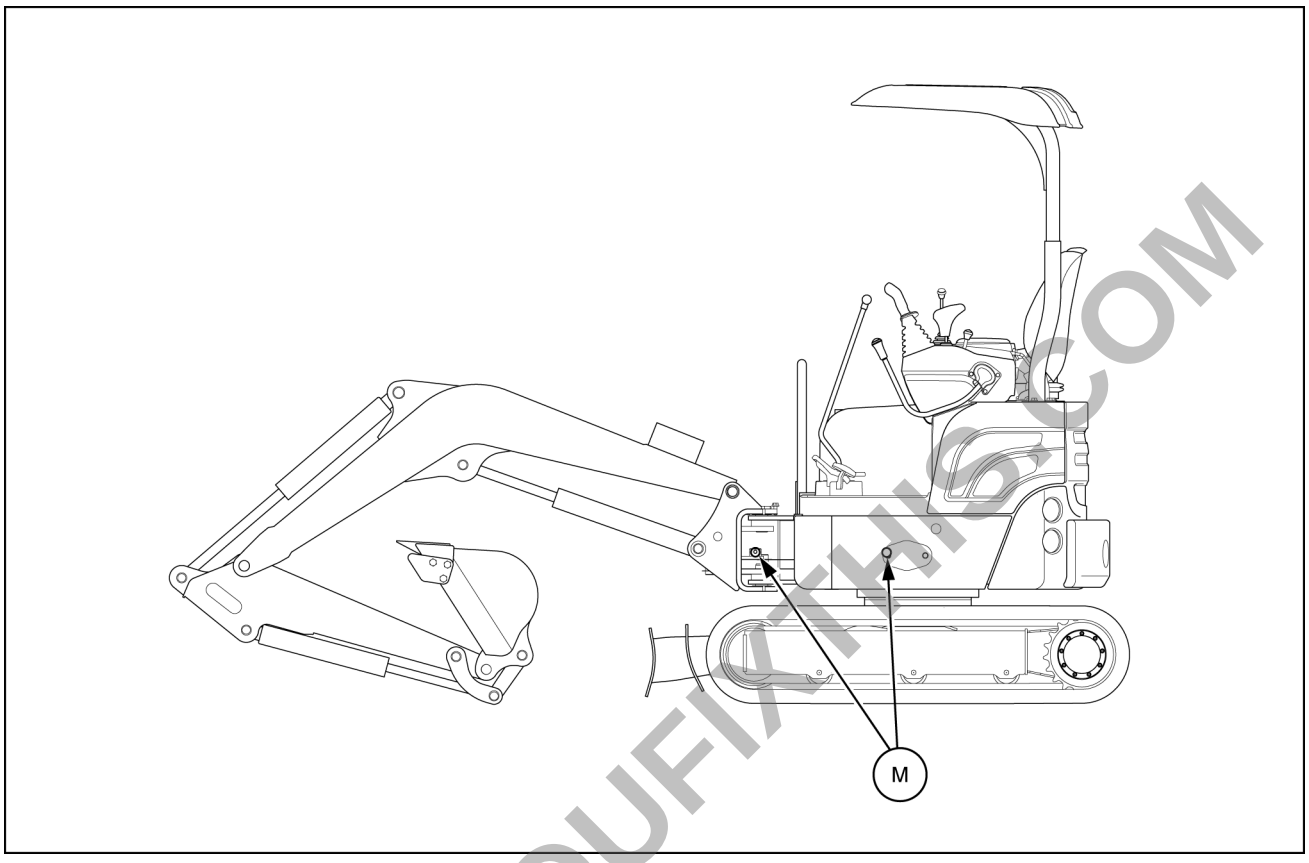

SMIL18MEX0889FB 1

Item	Measuring point	Standard value	Pin service limit	Pin limit of use	Bushing service limit	Bushing limit of use	Action
(M)	Boom swing cylinder	**30.00 mm (1.18 in)**	**29.00 mm (1.14 in)**	**28.50 mm (1.12 in)**	**30.50 mm (1.20 in)**	**31.00 mm (1.22 in)**	Replace

PREVIEW - YOUFIXTHIS.COM

Download full manual at youfixthis.com

Counterweight - Install

1. Lift the counterweight **(1)** and place it on the machine.
   - Counterweight weight: **185 kg** (**407.9 lb**)

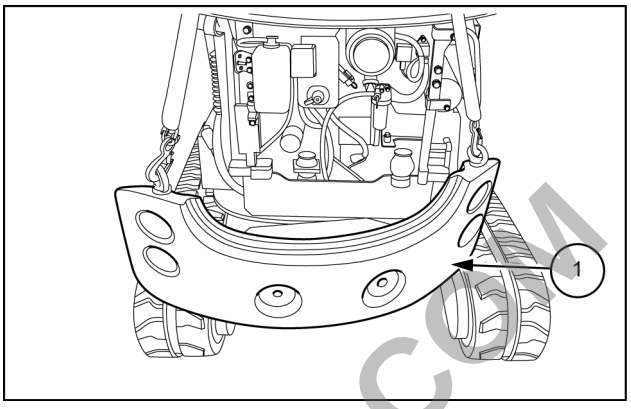

SMIL17MEX0651AB 1

2. Use a wrench [**30 mm**] to tighten the bolts **(2)** of the counterweight **(1)**.

   Tightening torque for bolts **(2)** installation:
   482.8 – 653.2 N·m (**356.1 – 481.8 lb ft**)

3. Remove the shackles and install the caps to the counterweight **(1)**.

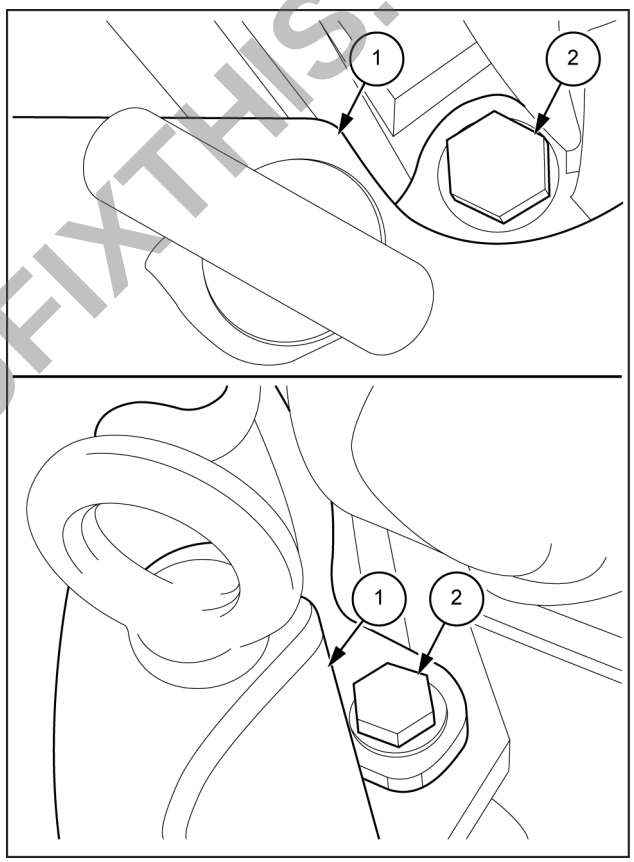

SMIL17MEX0100BB 2

PREVIEW - YOUFIXTHIS.COM

Download full manual at youfixthis.com

Sprocket - Install

1. Use a suitable lift-crane and a nylon sling to secure the drive sprocket **(2)**.
   - Sprocket weight: **4.0 kg** (**8.8 lb**)
2. Align the drive sprocket **(2)** to the travel motor **(3)** and insert the bolts **(1)**.
3. Use a box wrench [**17 mm**] to tighten the twelve bolts M10 x 1.5 **(1)**.

   Tightening torque for bolts **(1)** installation:
   60.8 – 74.5 N·m (**44.8 – 54.9 lb ft**)

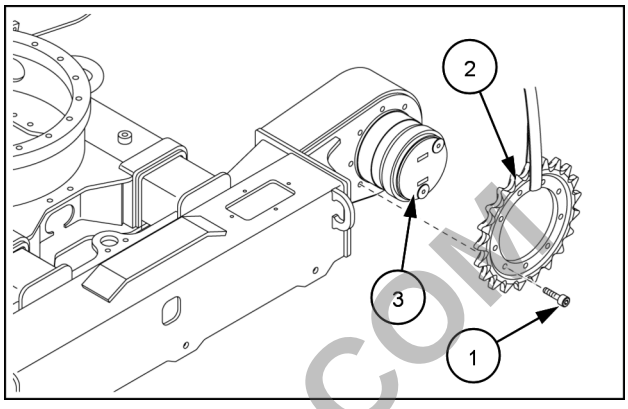

SMIL16MEX3654AA 1

4. Install the rubber track (refer to **Rubber track - Install (48.100)**).

PREVIEW - YOUFIXTHIS.COM

Download full manual at youfixthis.com

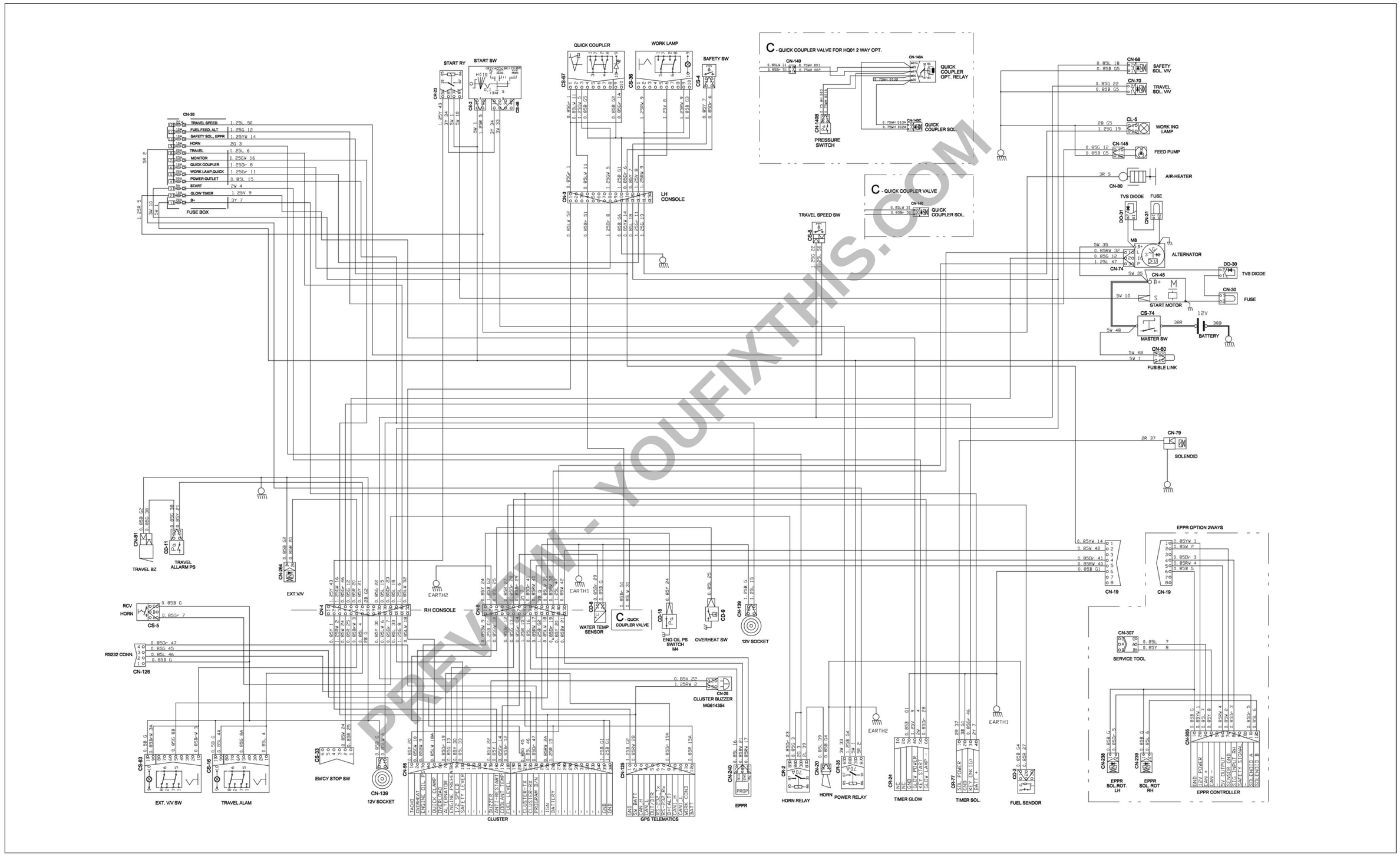

PREVIEW - YOUFIXTHIS.COM

Download full manual at youfixthis.com

Harnesses and connectors - Component localization

Main harness

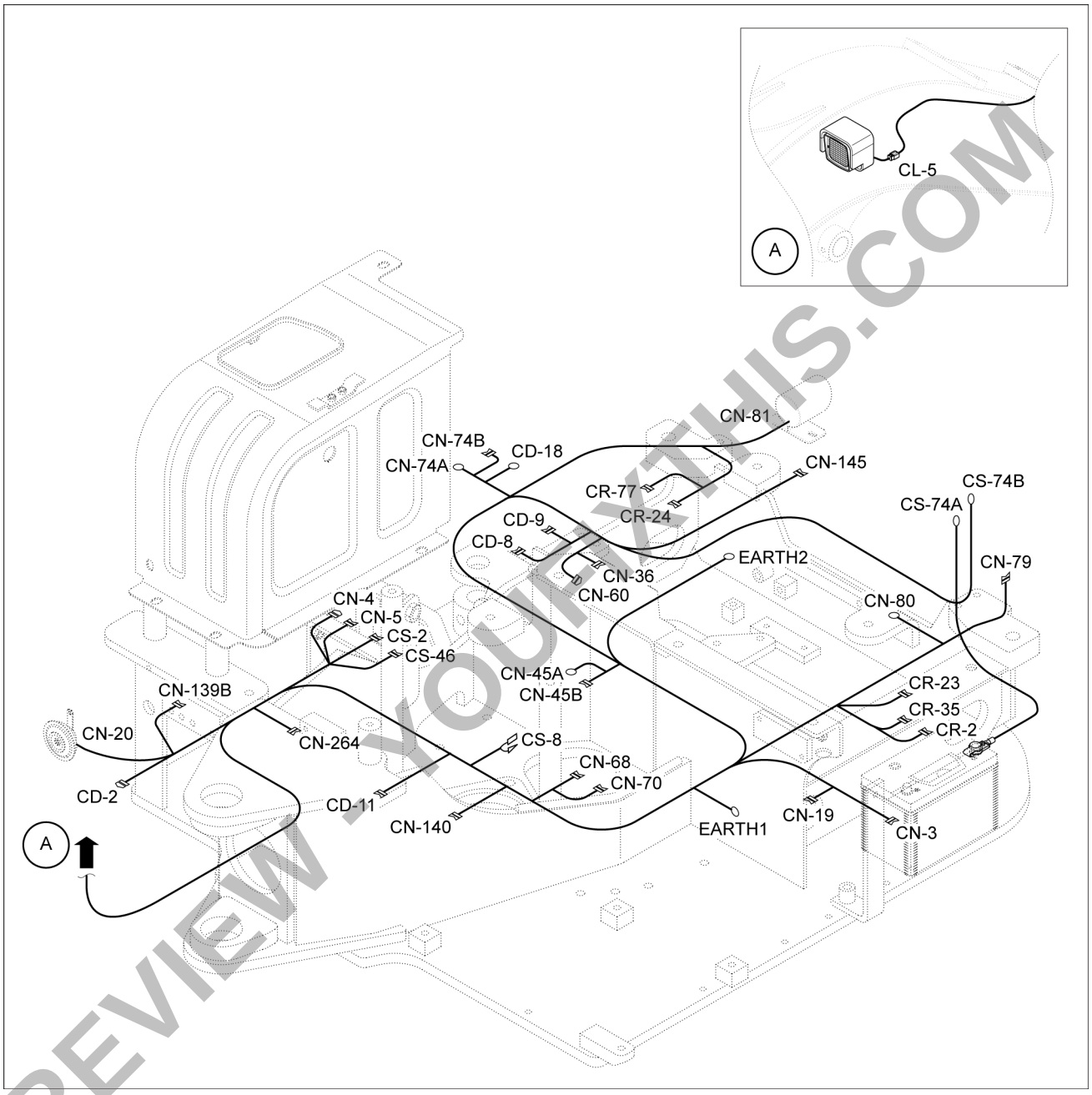

SMIL18MEX0711GB 1

A. Boom work lamp detail

PREVIEW - YOUFIXTHIS.COM

Download full manual at youfixthis.com

Speed control switch - Service instruction - Troubleshooting

Travel speed 1, 2 malfunction

- Before disconnecting the connector, always turn OFF the starter switch.
- Before carrying out below procedure, check all the related connectors are properly inserted and short fuse No. 12.
- After checking, insert the disconnected connectors again immediately unless otherwise specified.

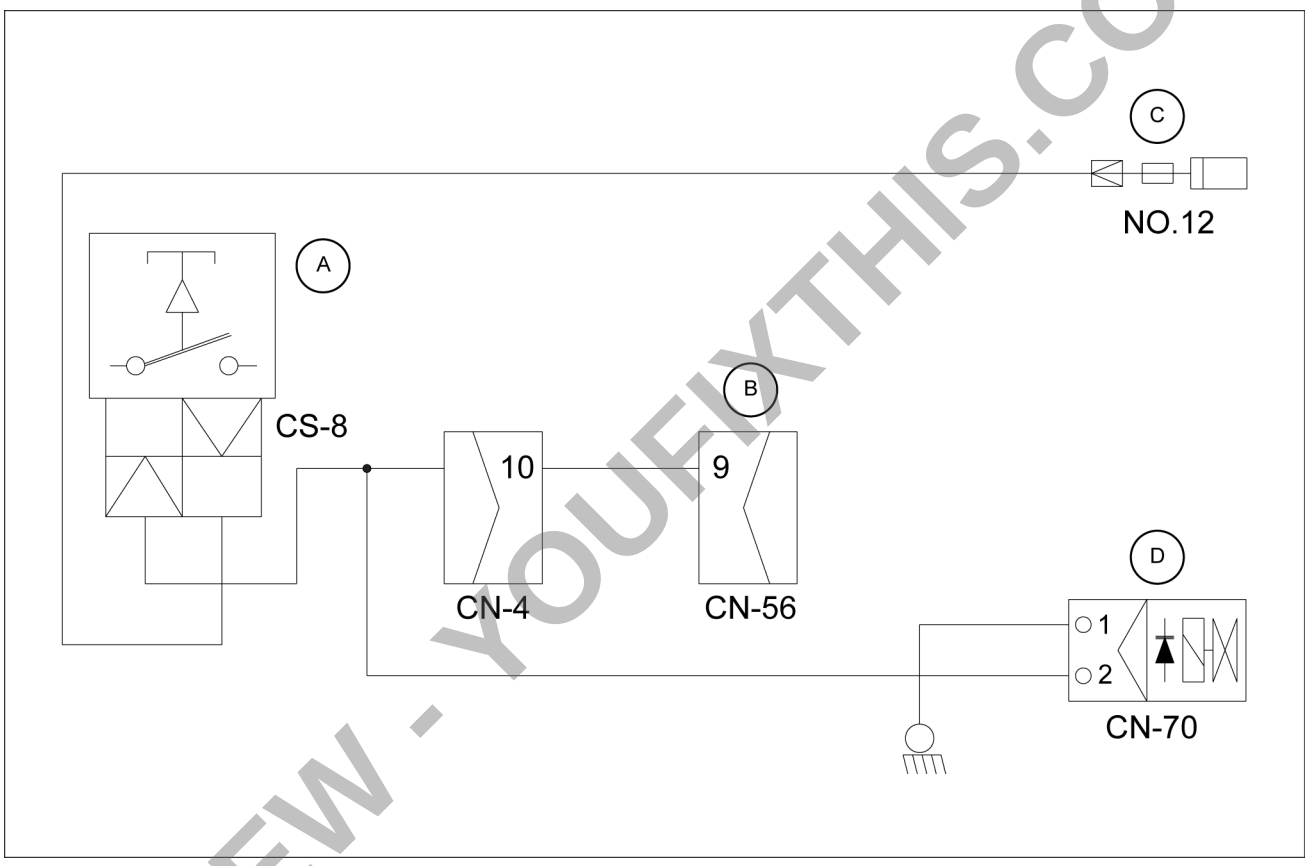

SMIL17MEX0861FB 1

A. Travel speed switch
B. Cluster
C. Fuse
D. Travel solenoid

Turn ON the starter switch.

1. Check the variation of the travel speed lamp when pressing the travel speed switch.
   A. If the travel speed lamp change, proceed to step 2.
   B. If the travel speed lamp do not change, the switch is defective. Replace it.

2. Turn ON the starter switch.
   Measure the voltage between the connector **CS-8** and ground.
   A. If the voltage is within **10 – 12.5 V**, proceed to step 3.
   B. If the voltage is not within **10 – 12.5 V**, there is a disconnection in the wiring harness or a poor contact between the connector **CS-8** and the fuse. Repair or replace it, after clean.

3. Turn ON the starter switch.
   Press and release the travel speed switch **(A)** to check the operative of the solenoid.
   A. If the solenoid is not operative, proceed to step 4.
   B. If the solenoid is operative, the hydraulic system is defective. Check the hydraulic system.

PREVIEW - YOUFIXTHIS.COM
Download full manual at youfixthis.com

Boom pivoting support - Service limits - Cylinders pins and bushings

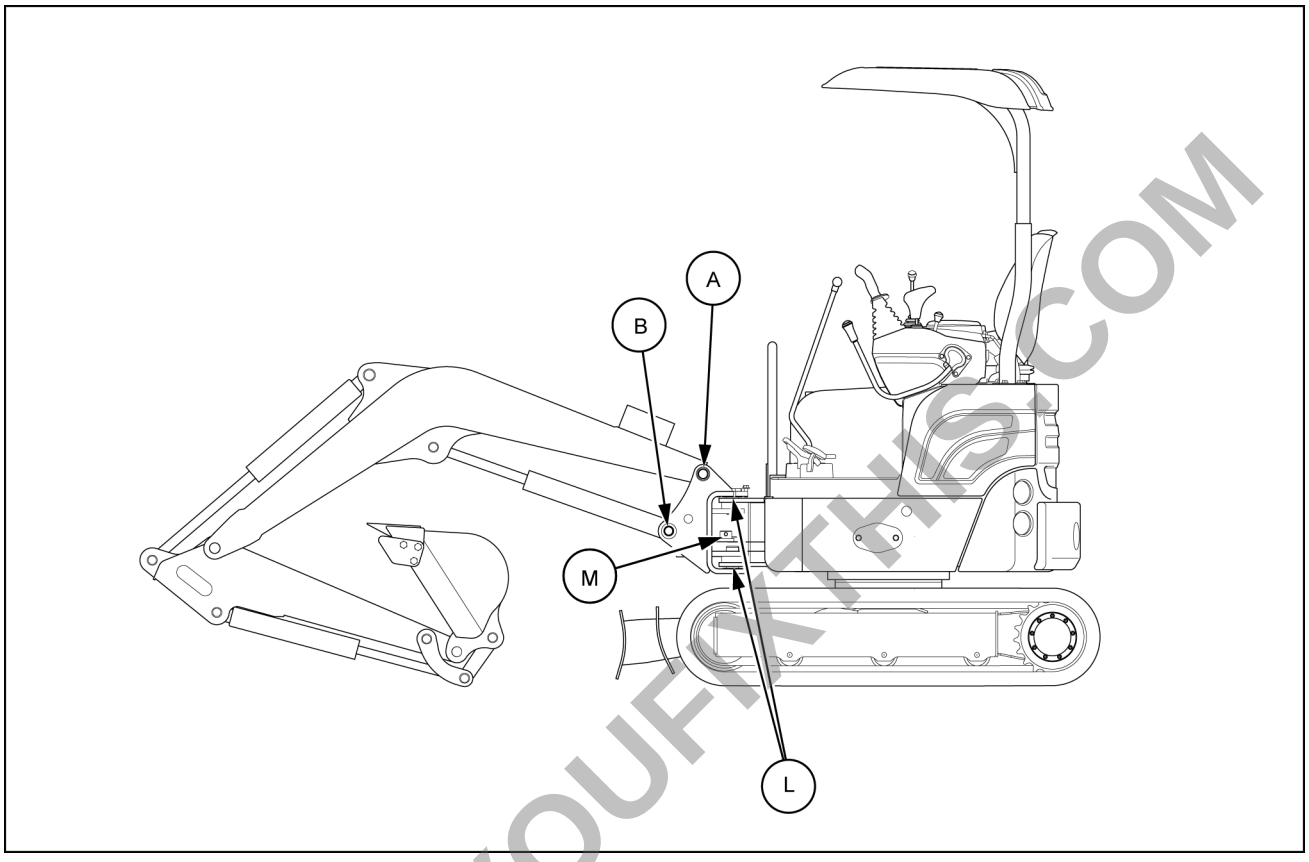

SMIL18MEX0888FB 1

Item	Measuring point	Standard value	Pin service limit	Pin limit of use	Bushing service limit	Bushing limit of use	Action
(A)	Boom rear	**35.00 mm (1.38 in)**	**34.00 mm (1.34 in)**	**33.50 mm (1.32 in)**	**35.50 mm (1.40 in)**	**36.00 mm (1.42 in)**	Replace
(B)	Boom cylinder head	**30.00 mm (1.18 in)**	**29.00 mm (1.14 in)**	**28.50 mm (1.12 in)**	**30.50 mm (1.20 in)**	**31.00 mm (1.22 in)**	Replace
(L)	Boom swing post	**45.00 mm (1.77 in)**	**44.00 mm (1.73 in)**	**43.50 mm (1.71 in)**	**45.50 mm (1.79 in)**	**46.00 mm (1.81 in)**	Replace
(M)	Boom swing cylinder	**30.00 mm (1.18 in)**	**29.00 mm (1.14 in)**	**28.50 mm (1.12 in)**	**30.50 mm (1.20 in)**	**31.00 mm (1.22 in)**	Replace

PREVIEW - YOUFIXTHIS.COM

Download full manual at youfixthis.com

Dozer blade - Service limits - Cylinders pins and bushings

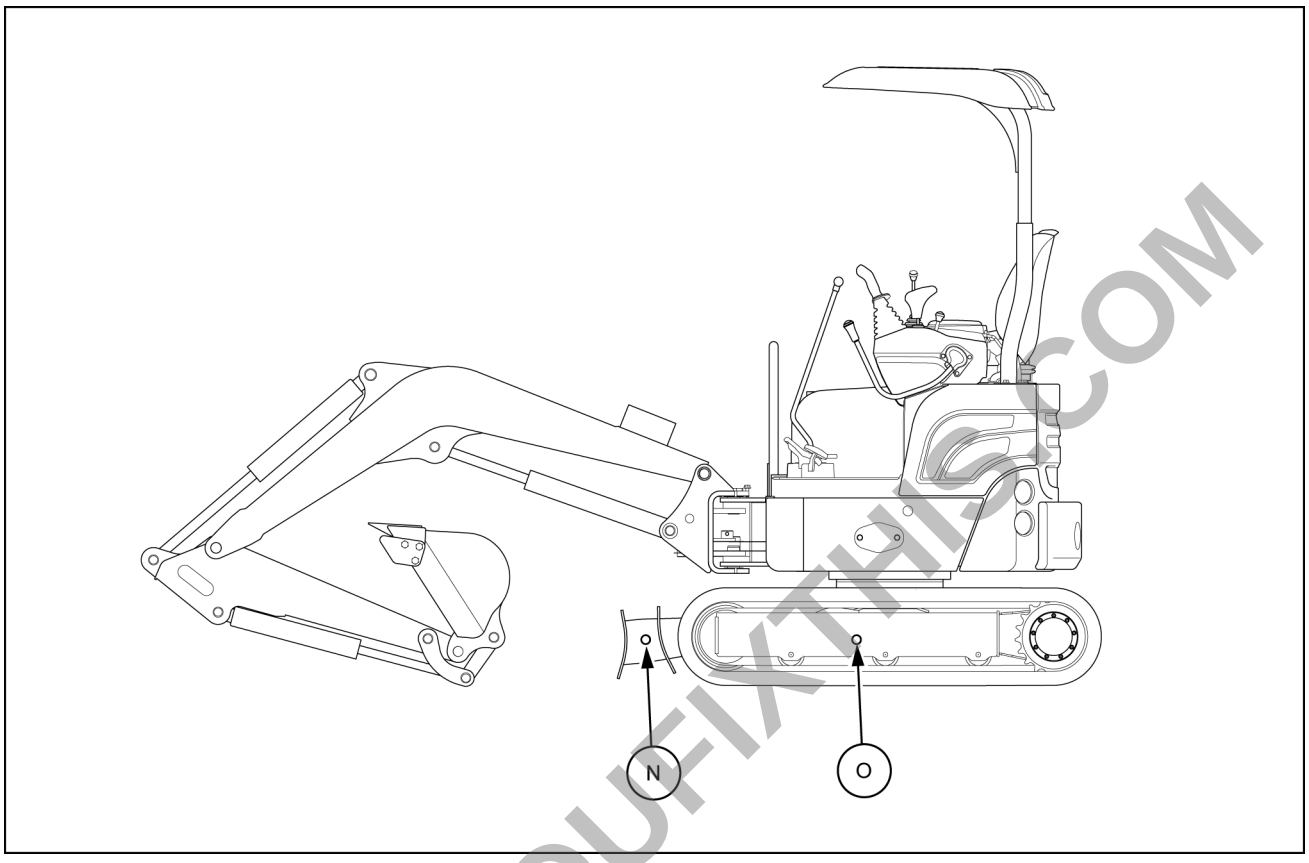

SMIL18MEX0891FB 1

Item	Measuring point	Standard value	Pin service limit	Pin limit of use	Bushing service limit	Bushing limit of use	Action
(N)	Blade cylinder	**30.00 mm (1.18 in)**	**29.00 mm (1.14 in)**	**28.50 mm (1.12 in)**	**30.50 mm (1.20 in)**	**31.00 mm (1.22 in)**	Replace
(O)	Blade and frame link	**30.00 mm (1.18 in)**	**29.00 mm (1.14 in)**	**28.50 mm (1.12 in)**	**30.50 mm (1.20 in)**	**31.00 mm (1.22 in)**	Replace

PREVIEW - YOUFIXTHIS.COM

Download full manual at youfixthis.com

Cab - Control identification - Service menu

1. To enter the service menu, keep the two arrows up and down simultaneously pressed for few seconds.

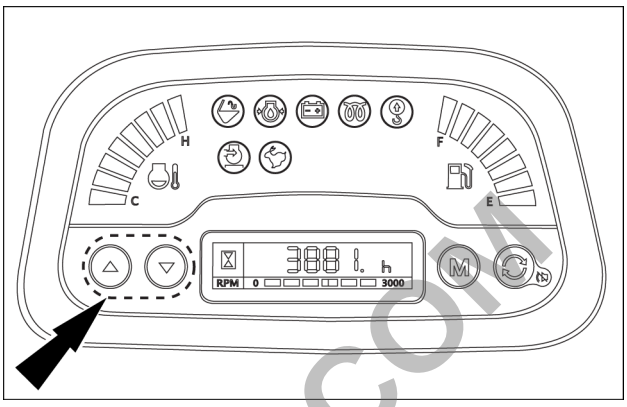

SMIL17MEX1218AA 1

2. Digit the service password: 59213180

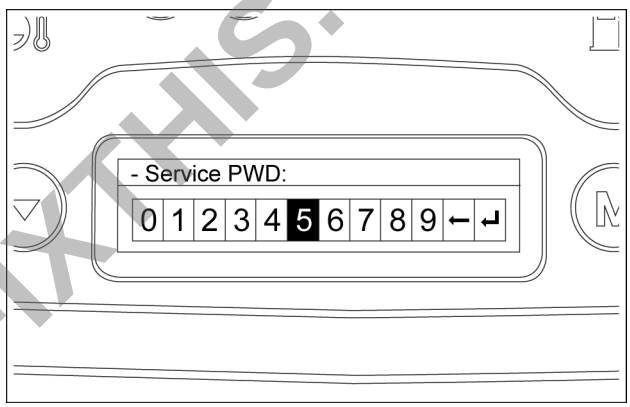

SMIL17MEX1219AA 2

3. Then you can access to the four following pages:

- Machine model
- Percent torque

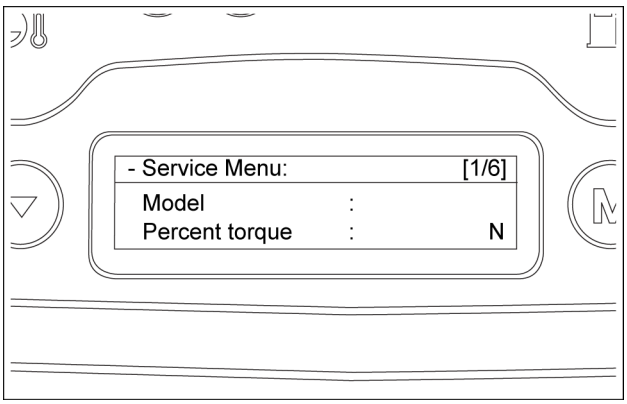

SMIL17MEX3046AA 3

- Engine round per minute
- Engine coolant temperature

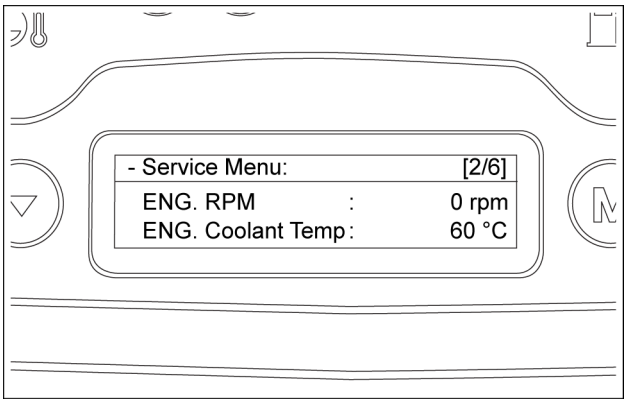

SMIL17MEX3047AA 4

PREVIEW - YOUFIXTHIS.COM

Download full manual at youfixthis.com

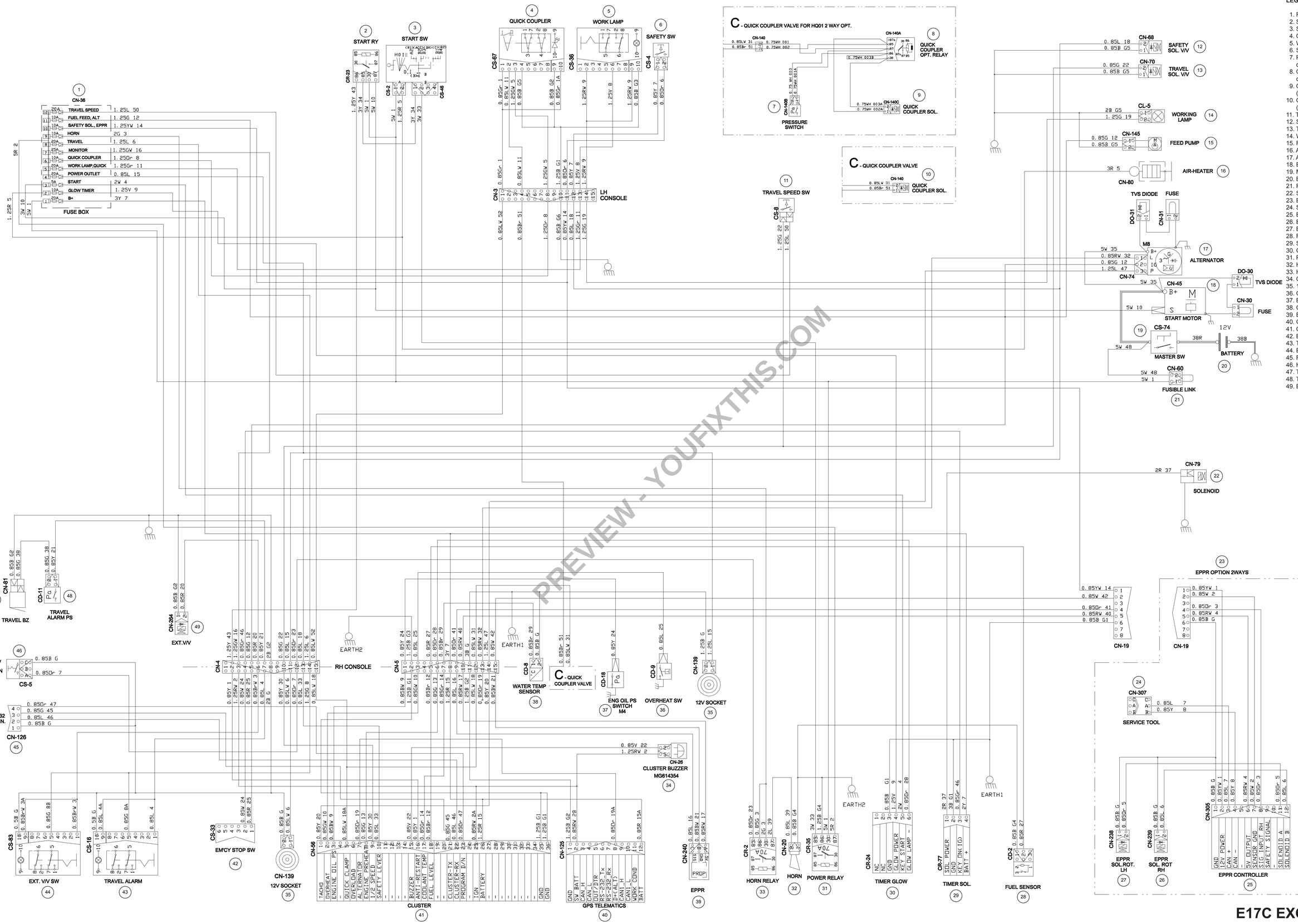

LEGEND

1. Fuse box
2. Starter relay
3. Starter switch
4. Quick coupler switch
5. Work light switch
6. Safety switch
7. Pressure switch (HQ01 2-way option)
8. Quick coupler relay (HQ01 2-way option)
9. Quick coupler solenoid valve (HQ01 2-way option)
10. Quick coupler solenoid valve (HQ02 1-way option)
11. Travel speed switch
12. Safety solenoid valve
13. Travel solenoid valve
14. Work lamp
15. Feed pump
16. Air-heater
17. Alternator
18. Engine starter
19. Master switch
20. Battery
21. Fusible link
22. Solenoid
23. EPPR option
24. Service tool
25. EPPR controller
26. EPPR solenoid (right)
27. EPPR solenoid (left)
28. Fuel sensor
29. Solenoid timer
30. Glow timer
31. Power relay
32. Horn
33. Horn relay
34. Cluster buzzer
35. 12V socket
36. Overload switch
37. Engine oil pressure switch
38. Coolant temperature sensor
39. EPPR
40. GPS telematics
41. Cluster
42. Emergency stop switch connector
43. Travel alarm switch
44. Extension valve switch
45. RS232 connector
46. Horn switch
47. Travel buzzer
48. Travel alarm pressure switch
49. Extension solenoid valve

E17C EXCAVATOR
ELECTRICAL SCHEMATIC

51679682EN

Download full manual at youfixthis.com

[35.354] Hydraulic central joint 35.10
[35.735] Track frame widening system 35.11
[35.736] Boom hydraulic system 35.12
[35.737] Dipper hydraulic system 35.13
[35.738] Excavator and backhoe bucket hydraulic system 35.14
[35.734] Tool quick coupler hydraulic system 35.15
[35.360] Hammer and rotating bucket hydraulic system 35.16
[35.739] Swing arm hydraulic system 35.17
[35.741] Dozer blade cylinders 35.18
[35.948] Frame positioning extending 35.19
Frames and ballasting 39
[39.140] Ballasts and supports 39.1
Tracks and track suspension 48
[48.130] Track frame and driving wheels 48.1
[48.100] Tracks 48.2
[48.134] Track tension units 48.3
[48.138] Track rollers 48.4
Electrical systems 55
[55.000] Electrical system 55.1
[55.100] Harnesses and connectors 55.2
[55.525] Cab engine controls 55.3
[55.201] Engine starting system 55.4
[55.301] Alternator 55.5
[55.302] Battery 55.6
[55.202] Cold start aid 55.7
[55.011] Fuel tank system 55.8
[55.012] Engine cooling system 55.9
[55.013] Engine oil system 55.10

PREVIEW - YOUFIXTHIS.COM
Download full manual at youfixthis.com

Hydraulic systems - Hydraulic schema - Swing circuit

Swing operation

When the left-hand control lever is pushed left-hand or right-hand, the swing spool in the main control valve is moved to the left-hand or right-hand swing position by the pilot oil pressure from the remote control valve. If the machine is equipped with swing motor parking brake, when the safety lever is in unlocked position the pilot oil pressure releases the parking brake of the swing motor. The oil from the P3 pump flows into the main control valve and then goes to the swing motor. At the same time, the return oil from the swing motor returns to the hydraulic oil tank through the swing spool in the main control valve. When this happens, the upper-structure swings to the left-hand or right-hand. The make up valve and the overload relief valve are provided in the swing motors. The cavitation which will happen to the swing motor is also prevented by the make up valve in the swing motor itself.

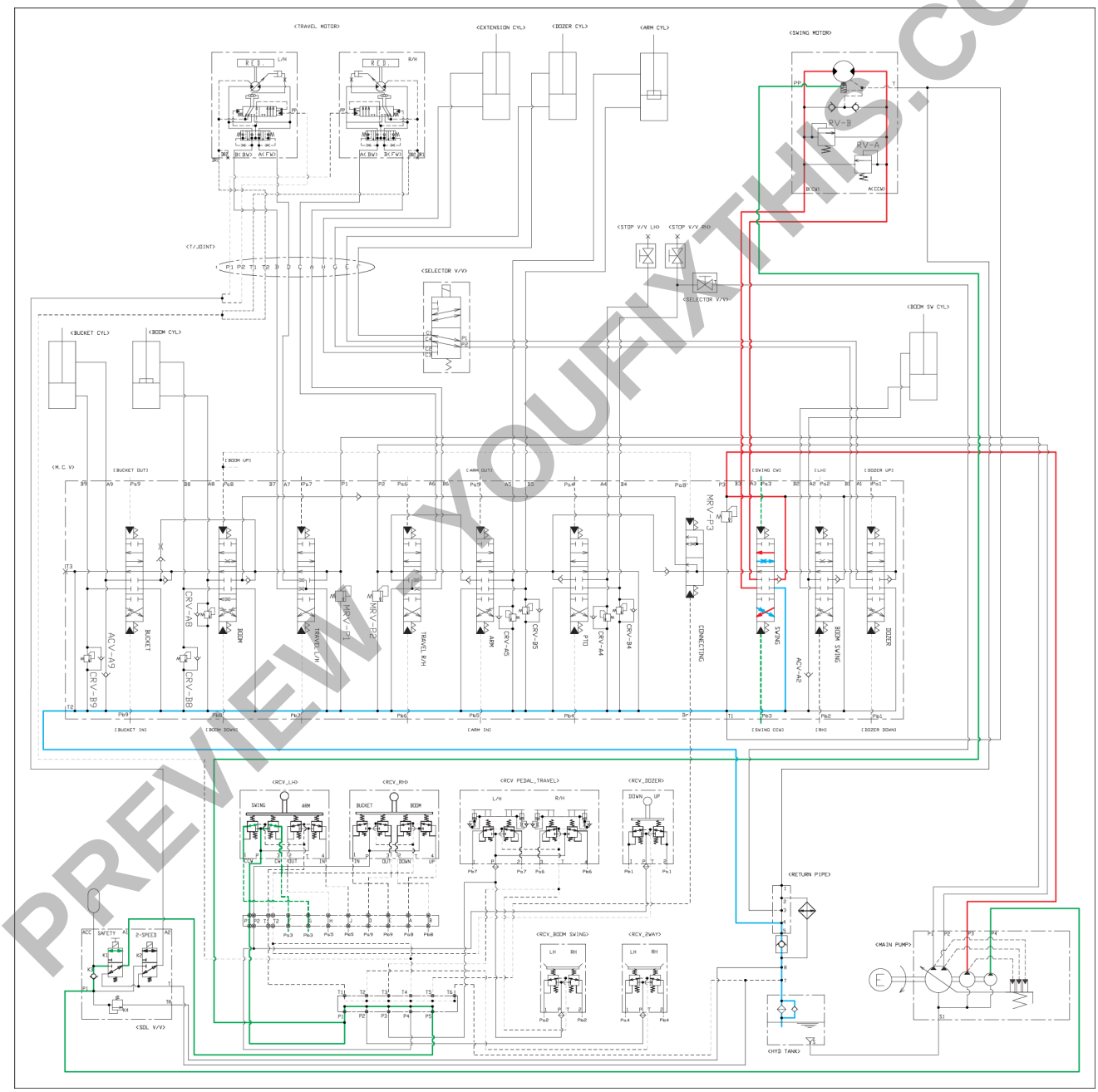

SMIL18MEX0782GA 1

Pressure line

Pilot pressure line

Tank line

Secondary pilot pressure line

PREVIEW | YOUFIXTHIS.COM
Download full manual at youfixthis.com

1. Remove the four bolts **(1)** in order to remove the travel motor cover **(2)**.
2. Remove the rubber track (refer to **Rubber track - Remove (48.100)**).
3. Remove the sprocket (refer to **Sprocket - Remove (48.130)**).

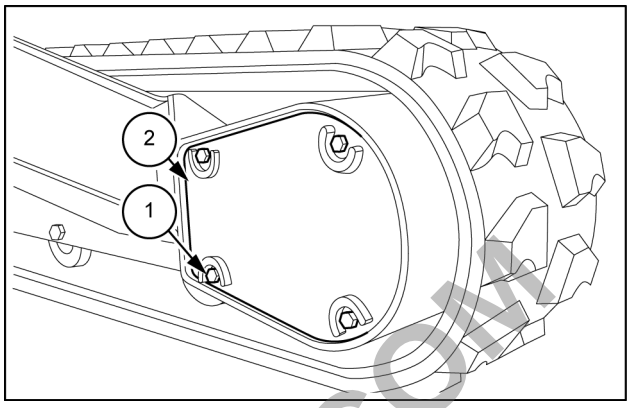

SMIL16MEX2758AB 1

4. Remove the four hoses **(2)** from the travel motor **(1)**.
   - Mark the hoses so that the connectors match at the time of assembly.
   - Use caps or plugs to cover the hoses and lines to prevent any entry of water, dust or dirt.
   - Clean the hoses by spraying with a parts cleaner to prevent scratches and prevent dirt from accumulating on the connectors.
5. Remove the bolts **(3)**.

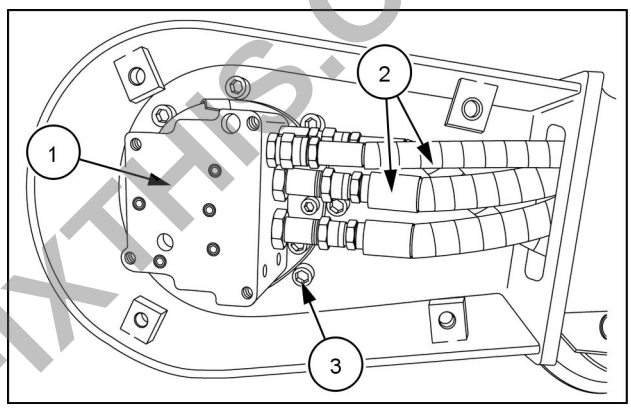

SMIL19MEX0650AB 2

6. Attach the wire rope to the travel motor **(1)**. Adjust the wire rope so that it is located at the center of mass and lift it with the lift-crane so that it is slightly tensed.
7. Remove the travel motor **(1)**.
   - Travel motor weight: **18.0 kg** (**39.7 lb**)

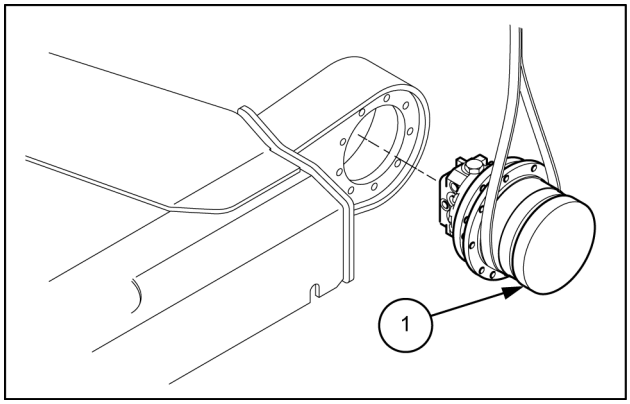

SMIL16MEX2760AB 3

PREVIEW - YOUFIXTHIS.COM

Download full manual at youfixthis.com

Component	Connector	Connector type
Fuel level sensor • **Electrical system - Component identification - Fuel level sensor (55.000)**	**CD-2**	AMP
Engine coolant temperature sensor • **Electrical system - Component identification - Engine coolant temperature sensor (55.000)**	**CD-8**	AMP
Overheat switch • **Electrical system - Component identification - Overheat switch (55.000)**	**CD-9**	AMP
Travel alarm pressure switch • **Electrical system - Component identification - Travel alarm pressure switch (55.000)**	**CD-11**	KET
Engine oil pressure switch • **Electrical system - Component identification - Engine oil pressure switch (55.000)**	**CD-18**	–
Boom work lamp • **Electrical system - Component identification - Lamp (55.000)**	**CL-5**	DEUTSCH
Intermediate connector: main harness - left-hand console harness	**CN-3**	AMP
Intermediate connector: main harness - right-hand console harness	**CN-4**	AMP
Intermediate connector: right-hand console harness - main harness	**CN-5**	AMP
Intermediate connector: main harness - EPPR controller	**CN-19**	AMP
Horn • **Electrical system - Component identification - Horn (55.000)**	**CN-20**	DEUTSCH
Fuse box • **Electrical system - Component identification - Fuse box (55.000)** • **Fuse and relay box - Overview (55.100)**	**CN-36**	–
Engine starter • **Electrical system - Component identification - Engine starter (55.000)**	**CN-45A** **CN-45B**	RING TERM YAZAKI
Fusible link • **Electrical system - Component identification - Fusible link (55.000)**	**CN-60**	AMP
Safety solenoid valve • **Electrical system - Component identification - Pilot solenoid valve block (55.000)**	**CN-68**	DEUTSCH
Travel solenoid valve • **Electrical system - Component identification - Pilot solenoid valve block (55.000)**	**CN-70**	DEUTSCH
Alternator • **Electrical system - Component identification - Alternator (55.000)**	**CN-74A** **CN-74B**	RING TERM SUMITOMO
Engine stop solenoid • **Electrical system - Component identification - Engine stop solenoid (55.000)**	**CN-79**	AMP
Pre-heater • **Electrical system - Component identification - Pre-heater (55.000)**	**CN-80**	RING TERM
Travel buzzer • **Electrical system - Component identification - Travel buzzer (55.000)**	**CN-81**	SWP

PREVIEW - YOUFIXTHIS.COM

Download full manual at youfixthis.com

PREVIEW ONLY

You're viewing 25 of 1260 pages

The full manual includes:

- All 1260 pages, complete
- Searchable PDF (find any keyword)
- No watermarks
- Instant download
- Print-ready quality

GET FULL MANUAL NOW

New Holland E17C Service Manual

Scan or click anywhere
youfixthis.com

Click anywhere on this page to get the full manual