NEW HOLLAND

REPAIR MANUAL

COMPACT CRAWLER EXCAVATOR

E18SR

APPLICABLE

CX17B . . . . . PU08-05001~

PREVIEW - YOUFIXTHIS.COM

Bur • Issued 03-2007
Printed in U.S.A. • Book/Form Number 87630256 NA
Copyright © 2005. CNH America, LLC. All Rights Reserved.
Download full manual at youfixthis.com

E18SR TABLE OF CONTENTS

SPECIFICATIONS SECTION

0-SAFETY

0.1 GENERAL SAFETY INFORMATION 0-2
0.2 SAFETY PRECAUTIONS 0-3

1-OUTLINE

1.1 GENERAL PRECAUTIONS FOR MAKING REPAIRS 1-3
1.1.1 PREPARATION BEFORE DISASSEMBLING 1-3
1.1.2 SAFETY WHEN DISASSEMBLING AND ASSEMBLING 1-3
1.1.3 DISASSEMBLING AND ASSEMBLING HYDRAULIC EQUIPMENT 1-3
1.1.4 ELECTRICAL EQUIPMENT 1-4
1.1.5 HYDRAULIC PARTS 1-5
1.1.6 WELD REPAIR 1-5
1.1.7 ENVIRONMENTAL ISSUES 1-5
1.2 INTERNATIONAL UNIT CONVERSION SYSTEM 1-6

2-SPECIFICATIONS

2.1 COMPONENTS NAME 2-3
2.2 MACHINE DIMENSIONS 2-4
2.3 SPECIFICATIONS AND PERFORMANCE 2-5
2.4 MACHINE 7 COMPONENTS WEIGHT 2-6
2.5 TRANSPORTATION 2-7
2.6 TYPE OF CRAWLER SHOES 2-9
2.7 TYPE OF BUCKET 2-9
2.8 ENGINE SPECIFICATIONS 2-10
2.8.1 SPECIFICATIONS 2-10
2.8.2 ENGINE PERFORMANCE CURVE 2-11

PREVIEW - YOUFIXTHIS.COM

Download full manual at youfixthis.com

71.1 HYDRAULIC CIRCUIT DIAGRAM

71.1.1 STANDARD SPECIFICATION

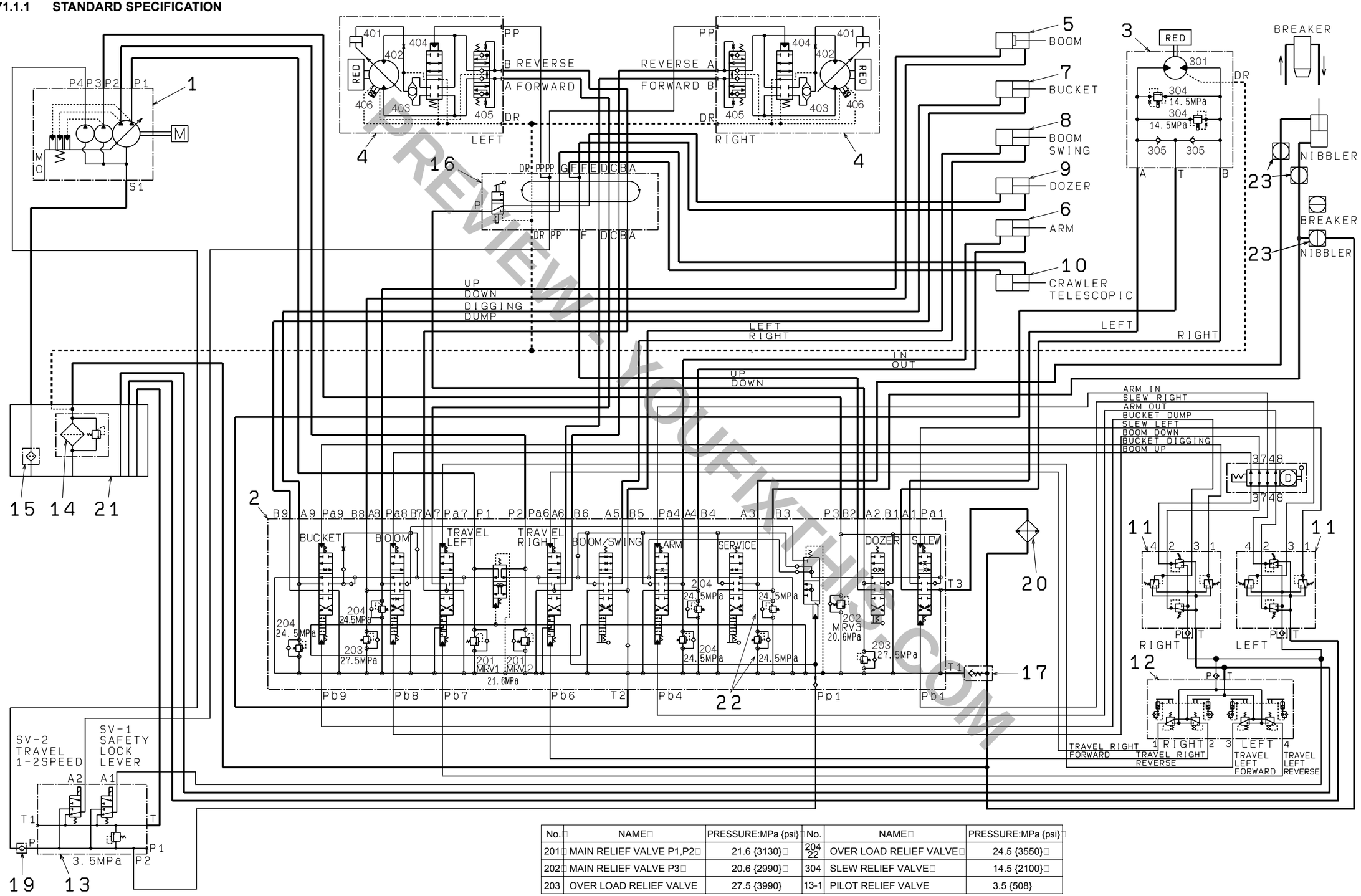

No.	NAME	PRESSURE:MPa {psi}	No.	NAME	PRESSURE:MPa {psi}
201	MAIN RELIEF VALVE P1,P2	21.6 {3130}	204 22	OVER LOAD RELIEF VALVE	24.5 {3550}
202	MAIN RELIEF VALVE P3	20.6 {2990}	304	SLEW RELIEF VALVE	14.5 {2100}
203	OVER LOAD RELIEF VALVE	27.5 {3990}	13-1	PILOT RELIEF VALVE	3.5 {508}

Fig. 71-1

Download full manual at youfixthis.com

PREVIEW - YOUFIXTHIS.COM

71.2 ELECTRIC CIRCUIT DIAGRAM

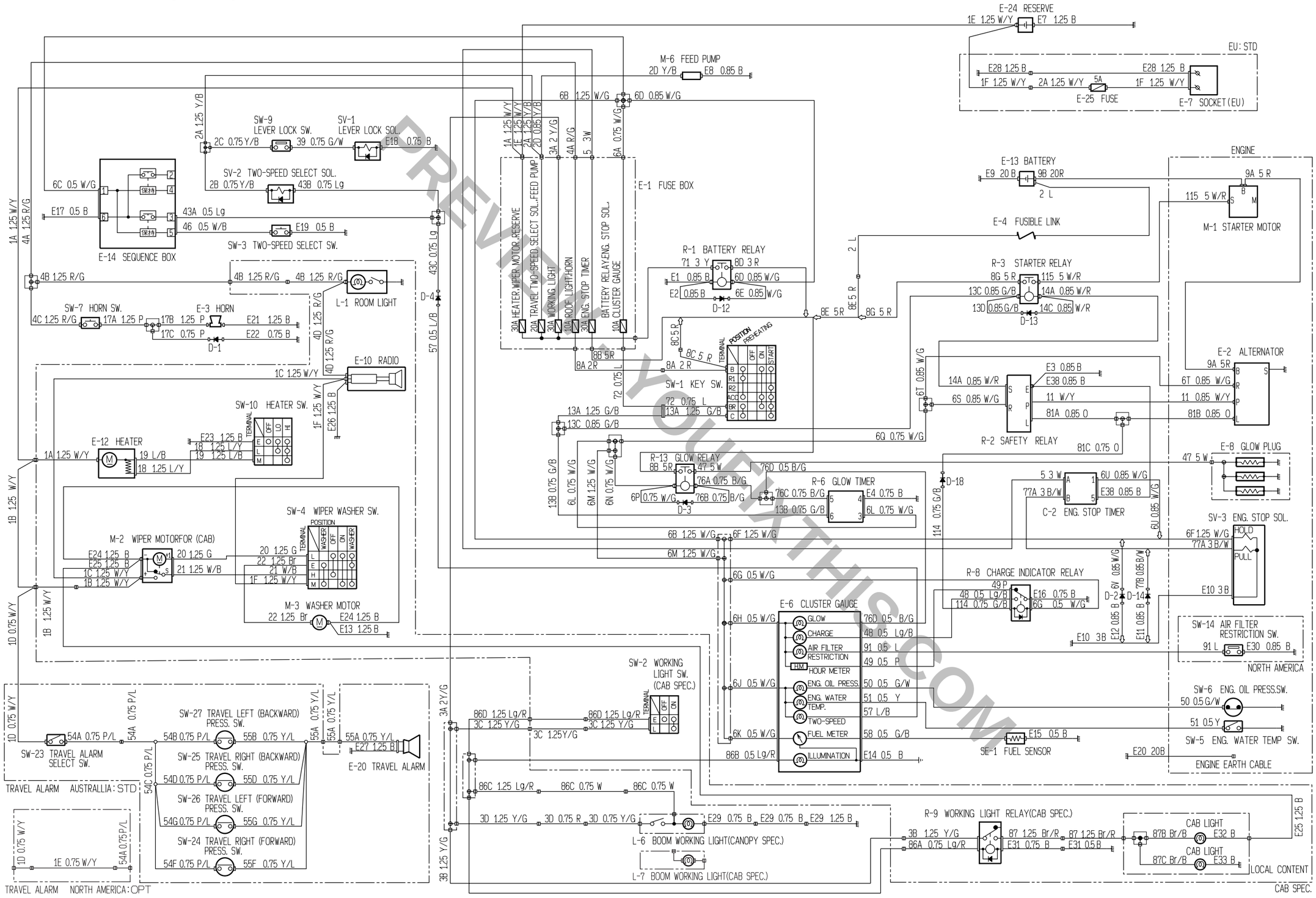

PREVIEW OF YOUFIXTHIS.COM

Download full manual at youfixthis.com

Fig. 71-14 (1/2)

24.1.1.2 CONSTRUCTION

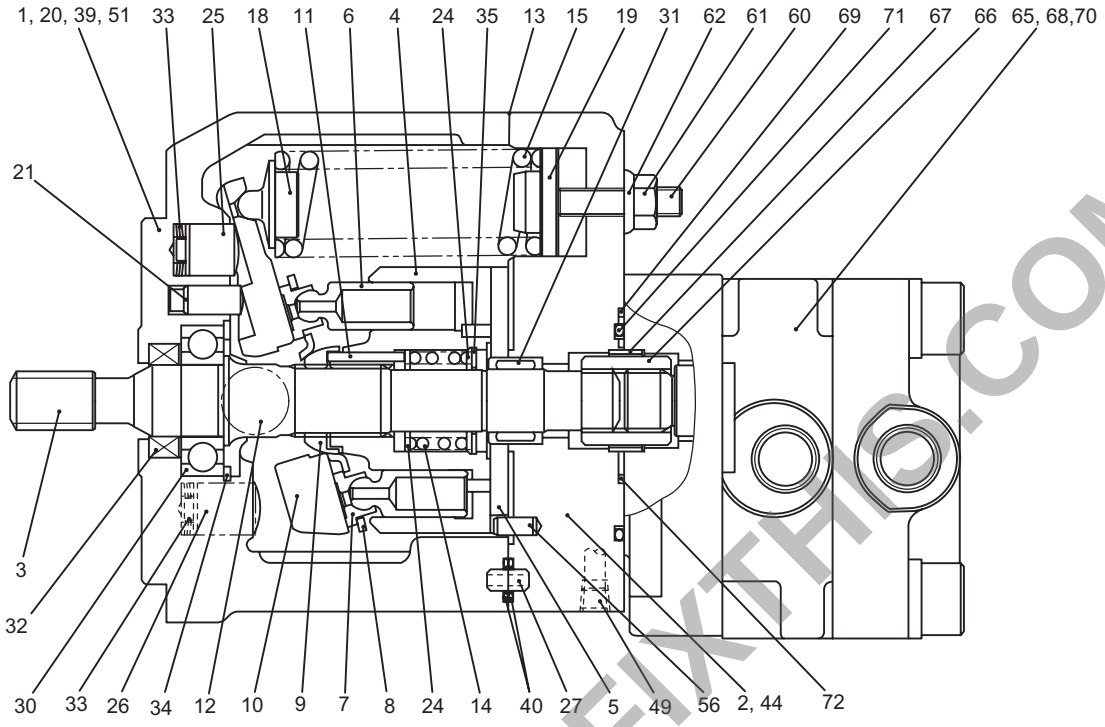

Fig. 24-2 Hydraulic pump–Sectional view

No	Name	Qty	No	Name	Qty	No	Name	Qty
1	Body S	1	19	Spring guide	1	49	Plug	4
2	Body H	1	20	Pin	1	51	Plug	1
3	Shaft	1	21	Rod G	1	56	Spring pin	1
4	Cylinder barrel	1	24	Retainer	2	60	Screw	1
5	Valve plate	1	25	Stopper pin A	1	61	Hexagon nut	1
6	Piston	10	26	Stopper pin B	1	62	Seal washer	1
7	Shoe	10	27	Pin	1	65	Gear pump	1
8	Shoe holder	1	30	Ball bearing	1	66	Coupling	1
9	Barrel holder	1	31	Needle bearing	1	67	Collar	1
10	Swash plate	1	32	Oil seal	1	68	Screw	2
11	Needle	3	33	Dish washer	8	69	O–ring	1
12	Ball	2	34	Snap ring	1	70	Washer	2
13	Packing	1	35	Snap ring	1	71	O–ring	1
14	Spring C	1	39	O–ring	1	72	O–ring	1
15	Spring T	1	40	O–ring	2			
18	Spring holder	1	44	Screw	4			

PREVIEW - YOUFIXTHIS.COM

Download full manual at youfixthis.com

11.1 TORQUE SPECIFICATIONS FOR CAPSCREWS & NUTS

The following Torque Specifications are provided for use when actual torque value of a fastener is not known. Check the capscrews and nuts for their looseness and dropping off before the start of daily work and at the periodical maintenance. Retighten the loosened ones, and install new ones for the dropped off. For the new machine, the check and retightening of them must be carried out at first 50 hours operation. For the replacement of them, make sure to use the same size of manufacturer's genuine parts.

Refer to the table below for the tightening and retightening of capscrews.

- The table below is not applicable for the capscrews to fix the cover, etc., made of plastic. For the tightening torque for such capscrews, consult with an authorized our Distributor. Over-tightening may cause damages on the parts to be fixed.
- In case that the tightening torque is specified in the manual, use such torque values regardless to the table below.
- Numerical indication on the capscrew head shows the classification for strength (e.g., 7 = 7 T). No indication is provided for smaller size of capscrews, M 5 or less.

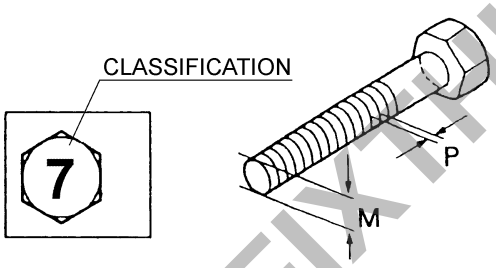

11.1.1 Metric Coarse Thread Standard Tightening Torque Values. Make Certain to tighten all Capscrews & Nuts to proper torque values.

Torque value Unit: N•m (lbf•ft)

Classification		4.8T		7T		10.9T	
Nominal size		No lubrication	Oil lubrication	No lubrication	Oil lubrication	No lubrication	Oil lubrication
M6	P=1	4.4±0.5 (3.2±0.4)	3.7±0.4 (2.7±0.3)	9.6±1.0 (7.1±0.7)	8.1±0.8 (6.0±0.6)	17.4±1.8 (12.8±1.3)	14.7±1.5 (10.8±1.1)
M8	P=1.25	10.7±1.1 (7.9±0.8)	9.0±0.9 (6.6±0.7)	23.5±2.0 (17.3±1.5)	19.6±2.0 (14.5±1.5)	42.2±3.9 (31.1±2.9)	35.3±3.9 (26.0±2.9)
M10	P=1.5	21.6±2.0 (15.9±1.4)	17.9±1.8 (13.2±1.3)	46.1±4.9 (34.0±3.6)	39.2±3.9 (28.9±2.9)	83.4±8.8 (61.5±6.5)	70.6±6.9 (52.1±5.1)
M12	P=1.75	36.3±3.9 (26.8±2.9)	31.4±2.9 (23.2±2.1)	79.4±7.8 (58.6±5.8)	66.7±6.9 (49.2±5.1)	143±15 (105±11)	121±12 (89.2±8.9)
M14	P=2	57.9±5.9 (42.7±4.4)	49.0±4.9 (36.1±3.6)	126±13 (92.9±9.6)	106±10 (78.2±7.4)	226±20 (167±15)	191±19 (141±14)
M16	P=2	88.3±8.8 (65.1±6.5)	74.5±6.9 (55.0±5.1)	191±20 (141±15)	161±16 (119±12)	343±39 (253±29)	284±29 (209±21)
M18	P=2.5	122±12 (90.0±8.9)	103±10 (75.8±7.2)	265±29 (195±21)	226±20 (167±15)	481±49 (355±36)	402±39 (297±29)
M20	P=2.5	172±17 (127±13)	144±14 (106±10)	373±39 (275±29)	314±29 (232±21)	667±69 (492±51)	559±59 (412±44)
M22	P=2.5	226±20 (167±15)	192±20 (142±15)	500±49 (369±36)	422±39 (311±29)	902±88 (665±65)	755±78 (557±58)
M24	P=3	294±29 (217±21)	235±29 (173±21)	637±69 (470±51)	520±49 (383±36)	1160±118 (856±87)	941±98 (694±72)
M27	P=3	431±39 (318±29)	353±39 (260±29)	941±98 (694±72)	765±78 (564±58)	1700±167 (1250±123)	1370±137 (1010±101)

PREVIEW - YOUFIXTHIS.COM

Download full manual at youfixthis.com

42.2 TROUBLE DIAGNOSIS: HYDRAULIC

Classification	Reference No.		Causes / Phenomenon	Pump			Valve								Actuator		
				Main pump	Trochaic pump	Gear pump	Travel & ATT main R/V	Main gear pump R/V	Each overload R/V	Travel straight valve	Travel spool	Attachment spool	Check valve	Shuttle valve	Slewing motor unit	Travel motor unit	Hydraulic cylinder
Attachment	1	(1)	Attachment operational failure Excluding swing, dozer and crawler width	○							○	○					
		(2)	Travel speed is slow.	○								○					○
		(3)	Attachment operating power is low.				○		○								○
		(4)	Malfunction of attachment							○		○					○
Travel operation	2	(1)	Travel operational failure	○							○					○	
		(2)	Travel speed is slow.	○							○					○	
		(3)	Travel operating power is low.				○									○	
		(4)	It deviates in travel independent operation.	○						○	○					○	
Slewing operation	3	(1)	Swing operational failure									○			○		
		(2)	Swing speed is slow.			○											
		(3)	Swing operating power is low.					○	○						○		
		(4)	Malfunction of slewing operation									○		○	○		
Pump	4	(1)	Engine speed is reduced due to pump load.	○													
		(2)	Malfunction of pump	○	○	○											

Abbreviation
E/G : Engine
SOL : Solenoid
SW : Switch
ATT : Attachment
C/V : Control valve
R/V : Relief valve
V : Valve

PREVIEW - YOUFIXTHIS.COM

Download full manual at youfixthis.com

2.3 SPECIFICATIONS AND PERFORMANCE

SPEED AND GRADEABILITY

Item	Rubber crawler belt		Iron crawler shoes	
Swing Speed	8.6 min^{-1} (8.6 rpm)			
Travel Speed	Low (1st)	High (2nd)	Low (1st)	High (2nd)
	2.0 km/h	4.0 km/h	2.0 km/h	4.0 km/h
Gradeability	58% (30°)			

ENGINE

Model (MITSUBISHI)	L3E-W231KBS
Type	Water-cooled, 4-cycle type Swirl chamber type diesel engine
Number of cylinders-Bore × Stroke	3 - 76 mm × 70 mm (3 - 2.99" × 2.76")
Total Displacement	952 ml (58.1 cu•in)
Output Rating	11.3 kW / 2,200 min^{-1} (15.4 PS / 2,200 rpm)
Maximum Torque	53.5 N•m / 1,800 min^{-1} (39.4 lbf•ft / 1,800 rpm)
Starting Motor	12 V × 1.7 kW
Generator	12 V × 40 A

HYDRAULIC COMPONENTS

Hydraulic Pump	Variable displacement axial piston + gear pump
Hydraulic Motor	Axial piston
Hydraulic Motor w/Reducer (Travel)	Variable displacement axial piston, 2-Speed motor
Control Valve	10-spool multiple control valve
Cylinder (Boom, Arm, Swing, Bucket, Dozer, Crawler)	Double action cylinder
Return Filter	Filter Type ($\beta_{10} \geqq 8\mu$)

SIDE DIGGING & DOZER

Type		Boom swing by hydraulic cylinder
Boom Swing Angle	Right	55°
	Left	42°
Dozer blade travel (up / down)		280 mm / 270 mm (11.0 in / 10.6 in)

PREVIEW - YOUFIXTHIS.COM

Download full manual at youfixthis.com

12.1 STANDARD WORKING TIME TABLE FOR THE MAINTENANCE OF EXCAVATOR

(1) Standard maintenance time table

1) Units of working time: 6 minutes = 0.1 hour
2) Calculating method of standard maintenance time:
   Maintenance time = Working time × Number of workers
   (Working time = Maintenance time / Number of workers)
3) When more than one work are done,
   a. Add each standard maintenance time
   b. A net time (readily starting) is given except covers easily removed by hand.
   c. Assembly works include the following works marked with black dot •
4) O / H: The removing and installing time are not included.
5) Abbreviations in the table.

ASSY	; Assembly	SOL	; Solenoid	Rem.	; Removal
ATT	; Attachment	SW	; Switch	Inst.	; Installation
BRG	; Bearing	V	; Valve	O/H	; Overhaul
C/V	; Control valve	F hose	; Flexible hose		
Cyl	; Cylinder	E/G	; Engine		

(2) Classification of work code

No.	GROUP	REMARKS
01	Attachment	To indicate removing, installing, replacement and overhaul.
02	Canopy and Guard	
03	Upper Structure	
04	Under carriage	

GROUP No.		EQUIPMENT PORTION	WORK TO BE DONE	UNIT	REMARKS	UNIT: HOUR
01 Attachment	00	**Bucket portion**			Refer to 32.1.2	
	01	Bucket ASSY	Rem.l/Inst.	1 pc.	Include adjustment	0.4
	02	• Bucket removing / installing position	Preparation	1 pc.		0.1
	03	• Bucket installing pin	Rem./Inst.	1 pc.	Include stopper pin.	0.1
	04	• Bucket drive pin	- ditto -	1 pc.		0.1
	05	• Bucket sling and transfer	Preparation	1 pc.		0.1
	06	Bucket (Single)	O/H	1 pc.	Not include removal / inst.	0.6
	07	• Bushing	Replace	1 pc.		0.5
	10	**Arm portion**			Refer to 32.1.3	
	11	Arm ASSY	Rem./Inst.	1 pc.		0.8
	12	• Bucket cylinder removing / installing position and piping	Preparation	1 pc.		0.2
	13	• Bucket cylinder rod pin	Rem./Inst.	1 pc.	Include stopper pin.	0.1
	14	• Bucket cylinder head pin	- ditto -	1 pc.	Include stopper pin.	0.1
	15	• Bucket cylinder assembly	- ditto -	1 pc.		0.1
	16	• Arm cylinder rod pin	- ditto -	1 pc.	Include stopper pin.	0.1
	17	• Boom top pin	- ditto -	1 pc.		0.1
	18	• Arm sling and transfer	- ditto -	1 pc.		0.1

PREVIEW - YOUFIXTHIS.COM

Download full manual at youfixthis.com

2.1 COMPONENTS NAME

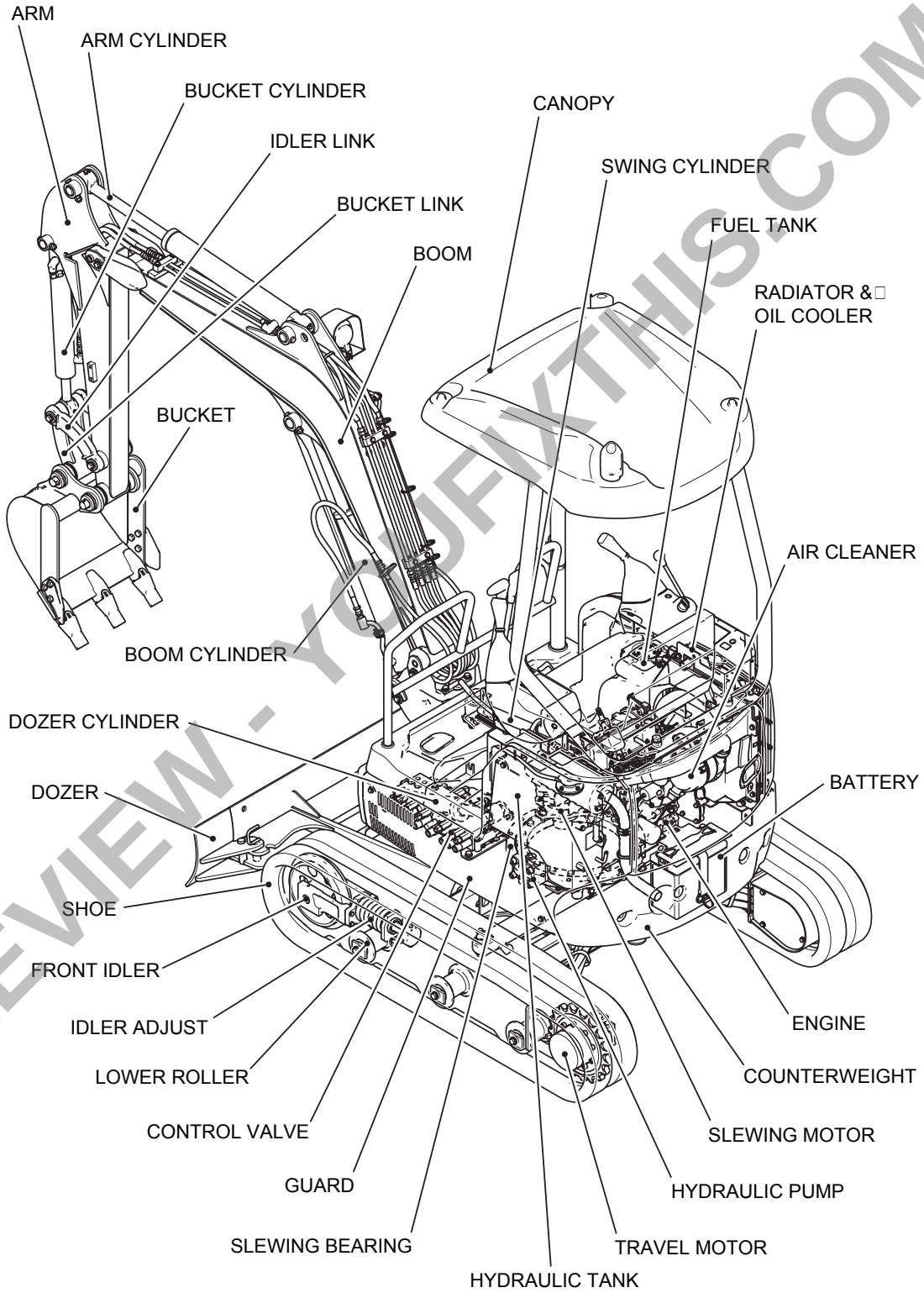

PREVIEW - YOUFIXTHIS.COM

Download full manual at youfixthis.com

2.5 TRANSPORTATION

(1) LOADING MACHINE ON A TRAILER

1) Keep trailer bed clean. Put chocks against truck wheels.
2) Use a ramp or loading deck. Ramps must be strong enough, have a low angle, and correct height. Load and unload machine on a level surface.
3) Travel machine onto ramps slowly. Center the machine over the trailer.
4) Lower all attachment.
5) Stop engine. Remove key from switch.

WARNING

Do not put chains over or against hydraulic lines or hoses.

6) Fasten machine to trailer with chains or cables.

During transportation, the bucket or attachments may hit the canopy or the cab. Therefore, set the machine in the transporting position by observing following points:

1. Extend the bucket cylinder fully.
2. Extend the arm cylinder fully.
3. Lower the boom.
4. If machine cannot be transported with arm cylinder fully extended, remove bucket or attachment and extend arm cylinder.

(2) TRANSPORTATION DIMENSION AND WEIGHT OF ATTACHMENT

1) BOOM WITH ARM CYLINDER

L × H × W	mm (ft–in)	1,820 × 650 × 300 (5'11.7" × 2'1.6" × 11.8")
Weight	kg (lbs)	78 (172)

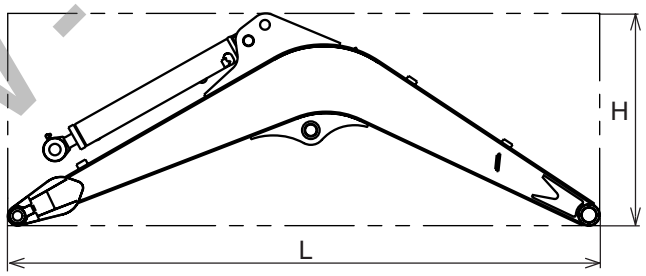

2) ARM & BUCKET (Japanese standard bucket)

L × H × W	mm (ft–in)	1,750 × 350 × 450 (5'8.9" × 1'1.8" × 1'5.7")
Weight	kg (lbs)	100 (221)

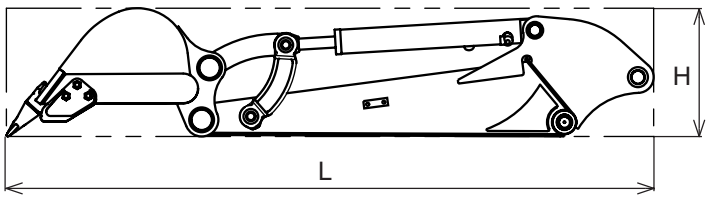

PREVIEW - YOUFIXTHIS.COM

Download full manual at youfixthis.com

GENERAL SAFETY INFORMATION

WARNING

Do not operate or perform any maintenance on this machine until all instructions found in the OPERATOR'S MANUAL and this MANUAL have been thoroughly read and understood.
Improper operation or maintenance of this machine may cause accidents and could result in serious injury or death.
Always keep the manual in storage.
If it is missing or damaged, place an order with an authorized our Distributor for a replacement.
If you have any questions, please consult an authorized our Distributor.

(1) Most accidents, which occur during operation, are due to neglect of precautionary measures and safety rules. Sufficient care should be taken to avoid these accidents. Erroneous operation, lubrication or maintenance services are very dangerous and may cause injury or death of personnel. Therefore all precautionary measures, NOTES, DANGERS, WARNINGS and CAUTIONS contained in the manual and on the machine should be read and understood by all personnel before starting any work with or on the machine.

(2) Operation, inspection, and maintenance should be carefully carried out, and safety must be given the first priority. Messages of safety are indicated with marks. The safety information contained in the manual is intended only to supplement safety codes, insurance requirements, local laws, rules and regulations.

(3) Messages of safety appear in the manual and on the machine: All messages of safety are identified by either word of "DANGER", "WARNING" and "CAUTION".

1) **DANGER-** Indicates an imminently hazardous situation which, if not avoided, will result in death or serious injury and is represented as follows:

DANGER

2) **WARNING-** Indicates a potentially hazardous situation which, if not avoided, could result in death or serious injury and is represented as follows:

WARNING

3) **CAUTION-** Indicates a potentially hazardous situation which, if not avoided, may result in minor or moderate injury. It may also be used to alert against possible damage to the machine and its components and is represented as follows:

CAUTION

(4) It is very difficult to forecast every danger that may occur during operation. However, safety can be ensured by fully understanding proper operating procedures for this machine according to methods recommended by Manufacturer.

(5) While operating the machine, be sure to perform work with great care, so as not to damage the machine, or allow accidents to occur.

(6) Continue studying the manual until all Safety, Operation and Maintenance procedures are completely understood by all persons working with the machine.

PREVIEW - YOUFIXTHIS.COM

Download full manual at youfixthis.com

3-ATTACHMENT DIMENSIONS

3.1 BOOM 3-3
3.1.1 BOOM DIMENSIONAL DRAWING 3-3
3.1.2 BOOM MAINTENANCE STANDARD 3-4
3.2 ARM 3-8
3.2.1 ARM DIMENSIONAL DRAWING 3-8
3.2.2 ARM MAINTENANCE STANDARD 3-10
3.3 BUCKET 3-14
3.3.1 BUCKET DIMENSIONAL DRAWING 3-14
3.3.2 DETAIL DIMENSIONAL DRAWINGS OF LUG SECTION 3-11
3.3.3 DETAIL DIMENSIONAL DRAWINGS OF BOSS SECTION 3-15
3.4 DOZER 3-16
3.4.1 DOZER DIMENSIONAL DRAWINGS 3-16
3.4.2 DOZER MAINTENANCE STANDARDS 3-18
3.5 SWING 3-20
3.5.1 SWING BRACKET DIMENSIONAL DRAWINGS 3-20
3.5.2 SWING PORTION MAINTENANCE STANDARDS 3-21

MAINTENANCE SECTION

11-TOOLS

11.1 STANDARD TORQUE SPECIFICATIONS FOR CAPSCREWS AND NUTS 11-3
11.1.1 Metric Coarse Thread Standard Tightening Torque values. Make certain to tighten all Capscrews & Nuts to proper torque values 11-3
11.1.2 Metric Fine Thread Standard Tightening Torque values. Make certain to tighten all Capscrews & Nuts to proper torque values 11-4
11.2 SCREW AND TOOL SIZE 11-5
11.2.1 CAPSCREW 11-5
11.2.2 CAPSCREW (SOCKET BOLT) 11-5
11.2.3 SOCKET SET SCREW 11-5
11.3 TORQUE SPECIFICATIONS FOR JOINTS AND HOSES 11-5
11.3.1 JOINTS FOR PIPING (O-RING SEALING TYPE) 11-5
11.3.2 HYDRAULIC HOSE (30° FLARE TYPE) 11-5
11.4 TORQUE SPECIFICATIONS FOR SLEEVE TYPE TUBE FITTINGS 11-6
11.4.1 SLEEVE TYPE TUBE FITTING 11-6
11.4.2 PART NO. 11-6
11.5 PLUG 11-7
11.5.1 PLUG FOR HYDRAULIC PIPE JOINT 11-7
11.5.2 PLUG FOR HYDRAULIC EQUIPMENT 11-8
11.6 SPECIAL SPANNER FOR TUBE 11-9
11.7 SPECIAL TOOLS 11-9
11.8 APPLICATION OF SCREW LOCKING COMPOUND AND SEALING COMPOUND 11-9
11.9 COUNTER WEIGHT LIFTING JIG 11-10

PREVIEW - YOUFIXTHIS.COM

Download full manual at youfixthis.com

(1) Clearance of pin and bushing

Table 3-11

Unit: mm (in)

Pos.	Item	Pin Part No.	Standard dimension			Clearance			Remedy
			Pin dia.	Tolerance on pin dia.	Tolerance on bushing bore dia.	Standard value	Standard value for repair	Service-ability limit	
A	Dozer blade cylinder (Head side)	PU51B01060P1	ø30 (1.181)	–0.03 –0.05 (-0.0012) (-0.0020)	+0.20 +0.05 (+0.0079) (+0.0020)	0.08~ 0.25 (0.0031~ 0.0098)	0.7 (0.028)	1.0 (0.039)	Replace bushing or pin
B	Dozer blade cylinder (Rod side)								
C	Dozer blade foot				+0.12 +0.08 (+0.0047) (+0.0020)	0.11~ 0.17 (0.0043~ 0.0067)			

(Note)

- The tolerance for bushing inside diameter means the dimension after fitting it into place.
- The part number for pins may be changed owing to improvement, use them only for reference.

(2) Clearance in thrust direction on the dozer and cylinder installation section

Table 3-12

Unit: mm (in)

Pos.	Item		Standard dimensions			Remedy	Pin length	
			No.	Dimensions	Clearance X adjusted with shim (total of both sides)		No.	Dimensions
A	Dozer blade cylinder (Head side)	Head side	L1	$45^{0}_{-0.5}$ ($1.772^{0}_{-0.020}$)	0.6~2.0 (0.023~0.079) After shim adjustment	When clearance X exceeds 3.5 mm, adjust it with shim.	PL1	83 (3.27)
		Dozer blade		47^{+1}_{0} ($1.850^{+0.039}_{0}$)				
B	Dozer blade cylinder (Rod side)	Rod side	L2	$45^{0}_{-0.5}$ ($1.772^{0}_{-0.020}$)			PL2	83 (3.27)
		Lower frame		47^{+1}_{0} ($1.850^{+0.039}_{0}$)				
C	Dozer blade foot	Dozer blade	L3	45±1 (1.772±0.039)			PL3	83 (3.27)
		Lower frame		63^{+1}_{0} ($2.480^{+0.039}_{0}$)				

(Note)

- Clearance X shall be adjusted using shims, if clearance exceeds the standard value for repair.

PREVIEW - YOUFIXTHIS.COM

Download full manual at youfixthis.com

22.3.4 SWING OPERATING CIRCUIT

(Refer to Fig. 71-4)

Pilot oil hydraulic system with operating lever

22.3.4.1 Swing (left) Operating Circuit

(1) Pilot Circuit

1) Swing Valve Spool Shifting
With operation for swing (left), the pilot secondary pressure oil is generated from the pilot valve (11), and led to the Pa1 port of control valve (2) to shift the swing valve spool.

(2) Main Circuit

1) Supply Circuit for Swing Motor (3)
The oil delivered from the P3 port on hydraulic oil pump (1) is supplied to the A port on swing motor (3) through the P3 port on control valve (2) and swing valve to drive the swing motor.

2) Swing Motor (3)

a. The relief valve (304) relieves rapidly increased pressure at start and stop of the machine to ease shock.

b. The make-up valve (check valve) (305) has a function to replenish oil from the return oil circuit that is led to the tank [T2 port on control valve (2)] to the swing motor, to prevent the swing motor from the cavitation due to negative pressure generated in it because of inertia on the swinging mass.

22.3.5 BUCKET OPERATING CIRCUIT

(Refer to Fig. 71-5)

Pilot oil hydraulic system with operating lever

22.3.5.1 Bucket Digging Operation Circuit

(1) Pilot Circuit

1) Bucket Spool Shifting
When the operating lever is put at bucket digging position, the pilot secondary pressure oil is generated from the pilot valve (11). The pressurized oil entered into the Pb9 port on control valve (2) shifts the bucket valve spool.

(2) Main Circuit

1) Supply Circuit for Cylinder (7)

a. Single Operation
The oil delivered from P1 port on variable pump of pump assembly (1) enters into P1 port on control valve (2). The pressurized oil from A9 port through bucket valve is supplied to the head side of bucket cylinder (7) to activate the digging work.
The return oil from the rod side of cylinder (7) enters into B9 port on control valve (2) and returns into the tank through bucket valve.

b. Simultaneous Operation of Bucket and Boom
The pressurized oil to the P1 port on control valve (2) enters the bucket valve through the by–pass circuit with a boom first orifice. The pressurized oil circulating through the bucket valve follows the same route as in a single operation.

- Boom first orifice
Increases the pressure loss in the passage to the bucket during simultaneous operation of a bucket and boom to give priority to the oil supply to the boom.

22.3.5.2 Bucket Dumping Operating Circuit

(1) Pilot Circuit

1) Bucket Spool Shifting
When the operating lever is moved to bucket dumping position, the pilot secondary pressure oil is supplied from pilot valve (11), and enters into Pa9 port on control valve (2) to shift the bucket valve spool.

(2) Main Circuit

1) Supply Circuit for Cylinder (7)
Similar to the case for bucket digging, the pressurized oil delivered from P1 port on variable pump enters into P1 port on control valve (2). The oil supplied from B9 port through bucket valve is entered into the rod side of bucket cylinder (7) to activate the bucket dumping.

PREVIEW - YOUFIXTHIS.COM

Download full manual at youfixthis.com

24.1.4.3 CONSTRUCTION

(1) Control Valve: Overall Composition

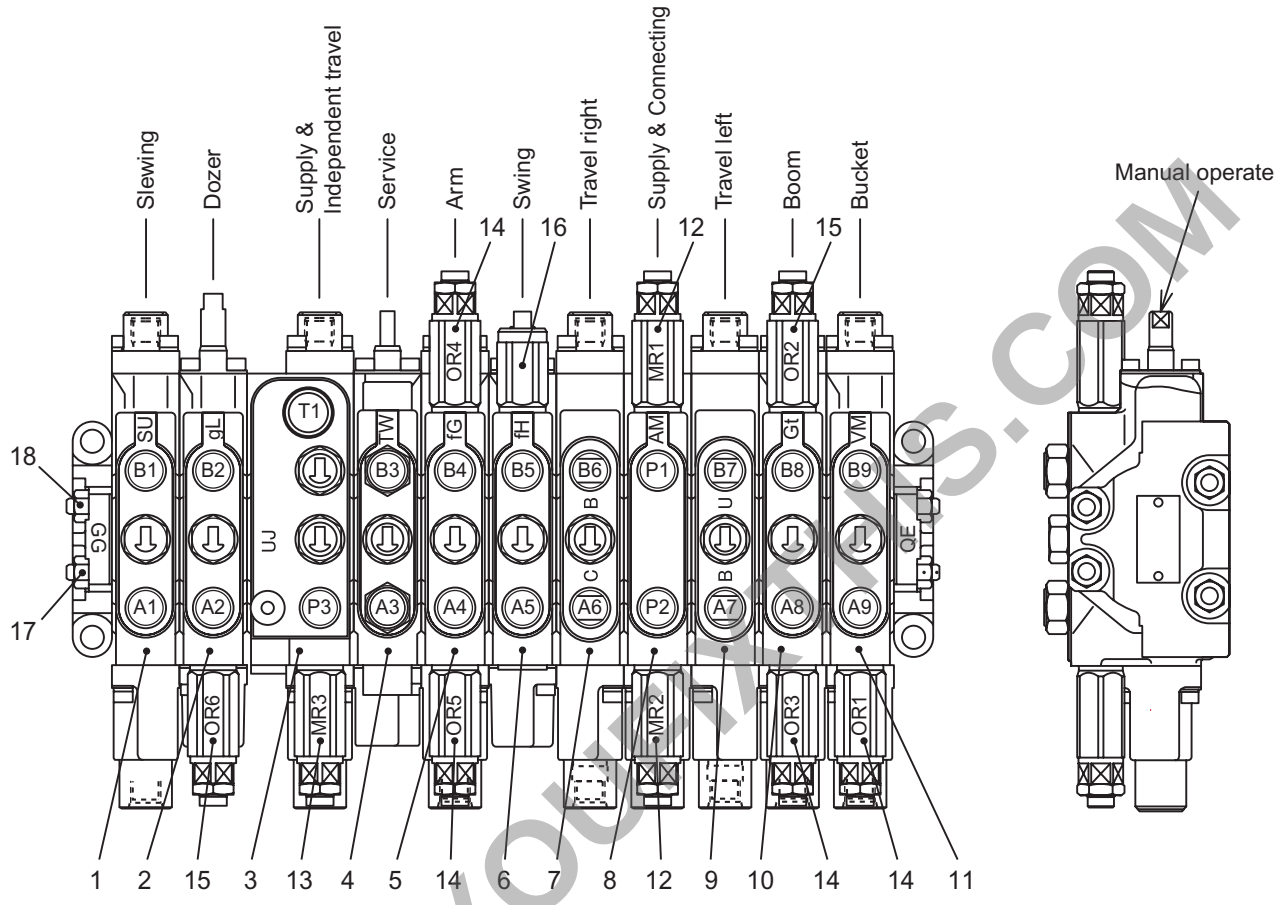

No.	NAME	Q'TY	No.	NAME	Q'TY	No.	NAME	Q'TY
1	Swing section	1	7	Travel (right) section	1	13	P3 Main relief valve	1
2	Dozer section	1	8	P1, P2 inlet straight	1	14	Over load relief valve	4
3	P3 inlet, independent travel & conflux section	1	9	Travel (left) section	1	15	Over load relief valve	2
4	Service section	1	10	Boom section	1	16	Anti cavitation valve	1
5	Arm section	1	11	Bucket section	1	17	Tie bolt	4
6	Swing section	1	12	P1, P2 Main relief valve	2	18	Nut	8

PREVIEW - YOUFIXTHIS.COM

Download full manual at youfixthis.com

Code No. Parts Name Parts No. Use Applicable Machine	Specifications	Description
R-8 Relay PA24E01001P1 Charge indicator relay PV10-27001~ PW12-40001~ PX13-15001~ PM08-08501~ PV11-30001~ PU08-05001~	Maker□s P/No. RC-5103 Rated voltage DC12V Insulation resistance 1Ω or more/20A,20℃ 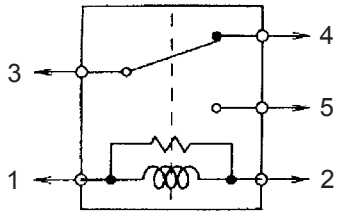 Circuit diagram	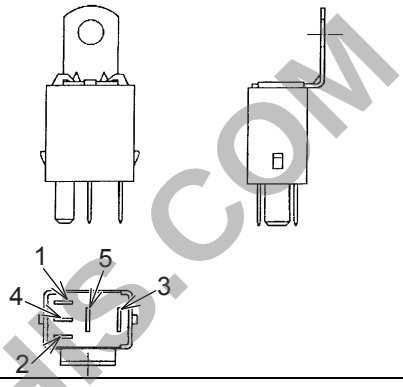

PREVIEW - YOUFIXTHIS.COM

Download full manual at youfixthis.com

33.1.7.3 ASSEMBLY

(1) Clean hydraulic oil tank, hose, and components.

(2) Install the tank in reverse order of the disassembly. The specified tightening torque is shown in the following table:

Item	Name	Tool (mm)	Torque N•m (lbf•ft)
B2	Sems-bolt (B2)	17	46.5 (34)
A18	Sems-bolt (A18)	19	115 (85)
A14	Clip	Minus screwdriver	4.4 (3.2)

		Tightening torque N•m (lbf•ft)	
Thread size (PF)	Spanner used (mm)	O-ring type fitting	30° flare type fitting
1/4	19	36.3 (27)	29.4 (22)
3/8	22	73.5 (54)	49 (36)
1/2	27	108 (80)	78.5 (58)
3/4	36	162 (119)	118 (87)

(3) After assembling, fill the tank with the specified hydraulic oil and check the oil level with the level gauge (C4) (See Fig. 33–18).
Oil quantity: about 9 liters (2.4 gal)

(4) Air bleeding

1) Start the engine.

2) Run the engine in low idle condition for two or three minutes. Then extend and retract each cylinder several times to bleed air in the circuit.

(5) Rechecking oil level
Stop the engine in the posture shown in Fig. 33-19 to recheck oil level. In addition, ensure no oil leakage is found on each part.

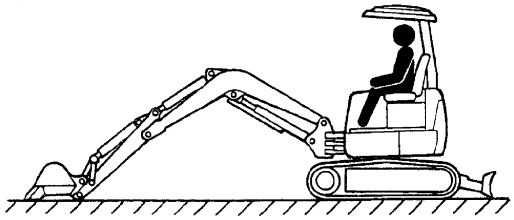

Fig. 33-19 Posture for stopping engine

PREVIEW - YOUFIXTHIS.COM

Download full manual at youfixthis.com

(4) Disassembling other parts

Remove the other parts, not described in paragraphs (1) through (3), in the following procedures:

1) Service section

Plug for actuator part (See Fig. 33-87.)

Fix the valve directing the actuator port upward.

Loosen and remove plug (11) on both right and left sides of the upper surface of the service change section with spanner of 21 mm (or socket wrench).

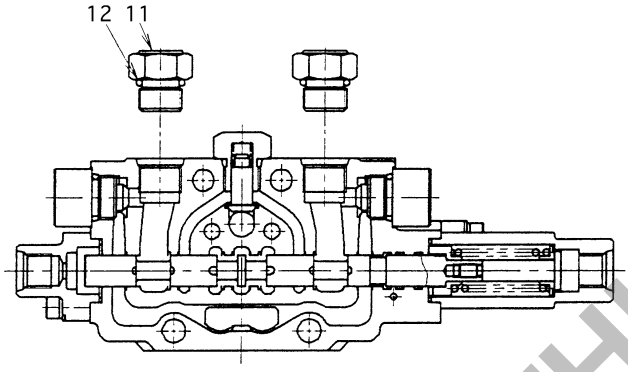

Fig. 33-87 Service section

2) Pilot cover of hydraulic pilot switching section (See Fig. 33-82.)

Loosen and remove two socket bolts (10) with an Allen wrench of 4 mm.

Remove the pilot cover (8) horizontally. At the same time, ensure that the O-ring (7) in the bottom of the flange for securing the pilot cover on the main frame side is in place without coming off.

3) Spool seal of manual switching section (See Fig. 33-83.)

Loosen and remove two socket bolts (10) with an Allen wrench of 4 mm.

The oil seal retainer (5) is also removed simultaneously. Remove the spool seal [O-ring (3) and dust wiper (4)] through the spool hole on the side of the main frame, paying attention not to damage the spool seal and switching main frame. Don't reuse the O-ring.

When it is required to be used again, check that it is free from flaw, deformation, foreign matter adhered, and so on before installation.

PREVIEW - YOUFIXTHIS.COM

Download full manual at youfixthis.com

33.2.6.4 Assembly

33.2.6.4.1 Assembling Swivel Joint

(1) Installing pin (5):
When the pin (5) has been removed, tap it into the shaft (1) with a plastic hammer paying attention to the installing length.

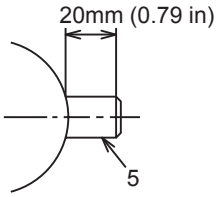

(2) Installing plugs:
When plugs (14), (15) and (16) have been remover, install them with each specified tightening torque.

Plug (14): : 6 mm, T=29.4 N•m (22 ft•lbs)

Plug (15): : 5 mm, T=18.6 N•m (14 ft•lbs)

Plug (16): : 4 mm, T=9.8 N•m (7.2 ft•lbs)

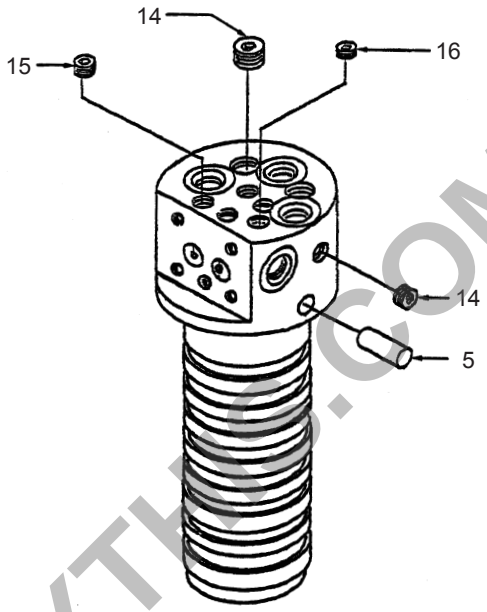

(3) Install the dust seal (12) to the shaft (1).

- Apply grease in plenty to the lip portion of dust seal (12).

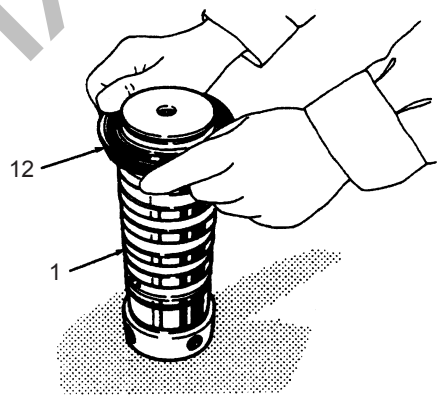

(4) Installing seals:
Install the O–ring (7), backup ring (11) and slipper seal (6) into each groove on the body (2).

- Ensure each positioning of the seals referring to the structural drawing.
- Pay attention not to give any damages, scores and twisting to the seals.



PREVIEW - YOUFIXTHIS.COM

Download full manual at youfixthis.com

9) Install the control piston (211) to the body 2 (202).

- Assemble the control piston, which spherical surface should be upper side.

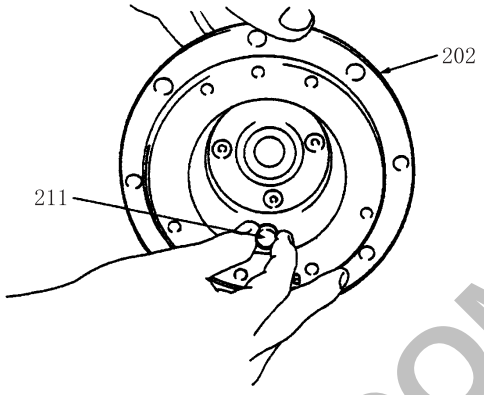

Fig. 34-117 Control piston (211) installation

10) Install the shaft (203) with bearing (215) to the body 2 (202).

- Pay attention not to damage the oil seal with the shaft.
  A oil seal which damaged should be replaced.

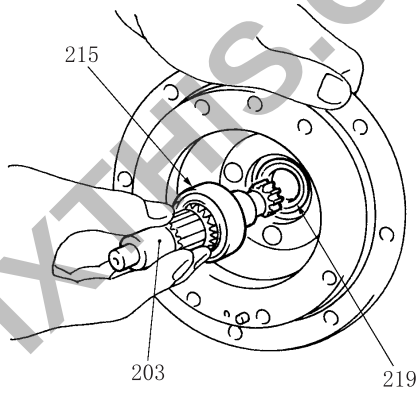

Fig. 34-118 Shaft (203) installation

11) Install two balls (220) to the body 2 (202).

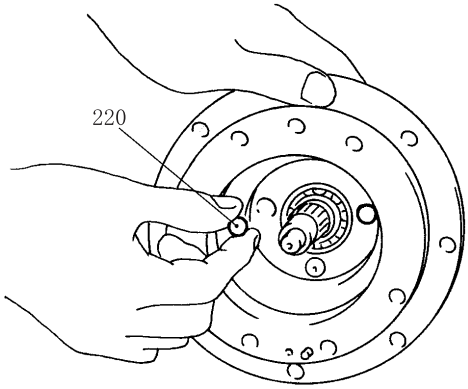

Fig. 34-119 Ball (220) installation

12) Install the swash plate (210) to the body 2 (202).

- Apply hydraulic oil on the sliding surface of swash plate.
- Apply grease on the reverse side of the swash plate to prevent it from dropping while assembling.

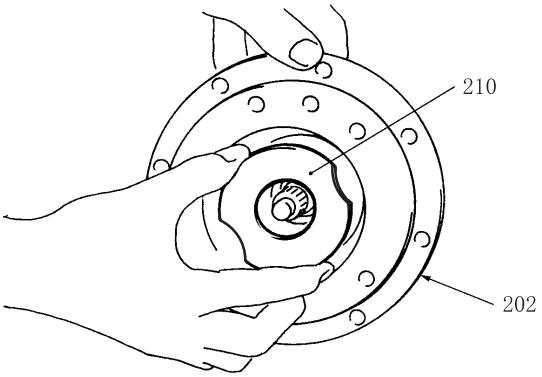

Fig. 34-120 Swash plate (210) installation

PREVIEW - YOUFIXTHIS.COM

Download full manual at youfixthis.com

Safety Cautions

⚠ WARNING

Fire and explosion

Keep flames away



Store fuel and engine oil in a well-ventilated designated area.
Make sure that the caps of fuel and engine oil containers are tightly closed.
Do not use flames, do not smoke, or do not work near heater or other fire hazards where fuel or oil is handled or when cleaning solvent is being used for washing parts.
Wipe off spilled fuel, oil and LLC immediately and thoroughly. Spilled fuel, oil and LLC may ignite and cause a fire.

Keep surrounding area neat and clean

Do not leave combustible or explosive materials, such as fuel, engine oil and LLC, near the engine. Such substances can cause fire or explosion.
Remove dust, dirt and other foreign materials accumulated on the engine and sorrounding parts thoroughly. Such materials can cause fire or the engine to overheat. In particular, clean the top surface of the battery thoroughly. Dust can cause a short-circuit.
Always operate the engine at a position at least 1 m [3.28 ft.] away from buildings and other equipment to prevent possible fire caused by engine heat.

Care about fuel, oil and exhaust gas leakage

If any fuel, oil or exhaust gas leakage is found, immediately take corrective measures to stop it.
Such leakages, if left uncorrected, can cause fuel or engine oil to reach hot engine surfaces or hot exhaust gas to contact flammable materials, possibly leading to personal injury and/or damage to equipment.

Use explosion-proof lighting apparatus

When inspecting fuel, engine oil, coolant, battery electrolyte, etc., use a flameproof light. An ordinary light, if it accidentally broken, may ignite and cause an explosion.

Prevent electrical wires from short-circuiting

Avoid inspecting or servicing the electrical system with the ground cable connected to the battery. Otherwise, a fire could result from short-circuiting. Be sure to disconnect the battery cable from the negative (-) terminal before beginning with the work procedure.
Short-circuits, possibly resulting in fire, may be caused by a loose terminal or damaged cable/wire. Inspect the terminals, cables and wires, and repair or replace the faulty parts before beginning with the service procedure.

Keep fire extinguishers and first-aid kit handy



Keep a fire extinguisher handy and be familiarized with their usage.
Keep a first-aid kit at a designated place, and make sure it is easily accessible whenever needed.
Establish emergency procedures to follow in the event of fire or accident, and keep the personnel informed of emergency contact locations and contact methods.

PREVIEW - YOUFIXTHIS.COM

Download full manual at youfixthis.com

INSPECTING AND REPAIRING ENGINE MAIN PARTS

1. Inspecting and repairing cylinder head and valve mechanism 6-2
1.1 Measuring clearance between rocker arm and rocker shaft 6-2
1.2 Measuring valve stem outside diameter and valve guide inside diameter 6-2
1.3 Replacing valve guide..... 6-3
1.4 Inspecting valve face 6-4
1.5 Retouching valve face..... 6-4
1.6 Measuring perpendicularity and free length of valve spring..... 6-5
1.7 Lapping valve and valve seat..... 6-5
1.8 Measuring distortion of cylinder head bottom face 6-6
1.9 Measuring pushrod runout..... 6-6

2. Inspecting and repairing flywheel....6-7
2.1 Measuring flatness of flywheel..... 6-7
2.2 Inspecting ring gear 6-7
2.3 Replacing ring gear..... 6-7
2.3.1 Removing ring gear.....6-7
2.3.2 Installing ring gear.....6-7

3. Inspecting and repairing gear case, timing gears and camshaft 6-8
3.1 Measuring backlash of timing gear 6-8
3.2 Measuring clearance between idler gear and idler shaft 6-8
3.3 Measuring clearance between camshaft journal and cylinder block bore 6-9
3.4 Measuring cam height..... 6-9
3.5 Measuring cam height of fuel injection pump camshaft 6-9
3.6 Inspecting tappet..... 6-10
3.7 Measuring clearance between tappet and tappet guide hole 6-10

4. Inspecting and repairing cylinder block, crankshaft, piston and oil pan 6-11
4.1 Measuring cylinder inside diameter 6-11
4.2 Boring cylinder 6-12
4.2.1 Measuring piston outside diameter 6-12
4.2.2 Boring finish dimension 6-12
4.3 Measuring piston ring end gap..... 6-13
4.4 Inspecting piston ring groove 6-13
4.5 Measuring piston pin bore diameter and piston pin outside diameter..... 6-14
4.6 Measuring connecting rod end play 6-14
4.7 Inspecting connecting rod bend and twist6-15
4.8 Measuring clearance between connecting rod bearing and crankpin..... 6-16
4.9 Measuring clearance between main bearing and crankshaft journal..... 6-17
4.10 Measuring crankshaft runout..... 6-18
4.11 Replacing crankshaft gear 6-18
4.11.1 Removing crankshaft gear..... 6-18
4.11.2 Installing crankshaft gear..... 6-18
4.12 Measuring distortion of cylinder block top surface 6-19

PREVIEW - YOUFIXTHIS.COM

Download full manual at youfixthis.com

2.4.1 Removing swivel nipple

(1) Grab the plunger of the pump housing with a vise.

(2) Remove the swivel nipple from the pump housing.

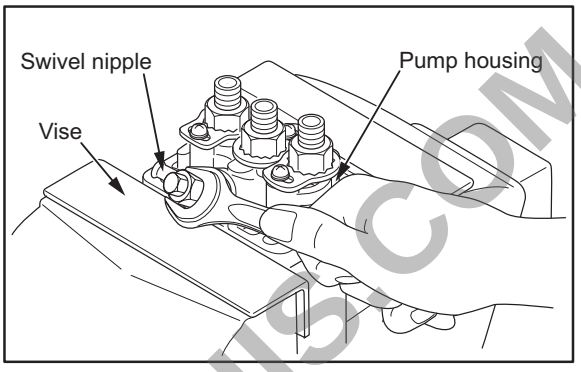

Removing swivel nipple

2.4.2 Removing tappets

(1) Turn the pump housing upside down and grab the housing with a vise.

(2) Remove the stop wire bracket and remove the control rack.

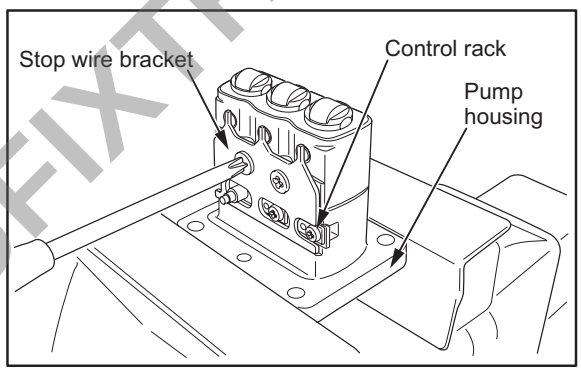

Removing stop wire bracket

(3) Push in the tappet and, pull out the tappet guide pin with tweezers.

(4) Remove the tappet.

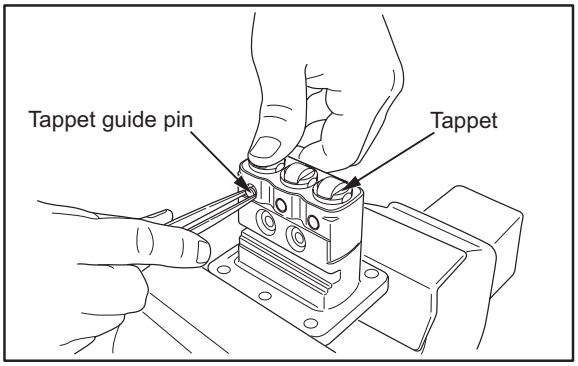

Removing tappet guide pin

2.4.3 Removing plunger

Using tweezers, remove the tappet shim plate, spring lower seat, plunger, plunger spring, spring upper seat and control sleeve from the pump housing.

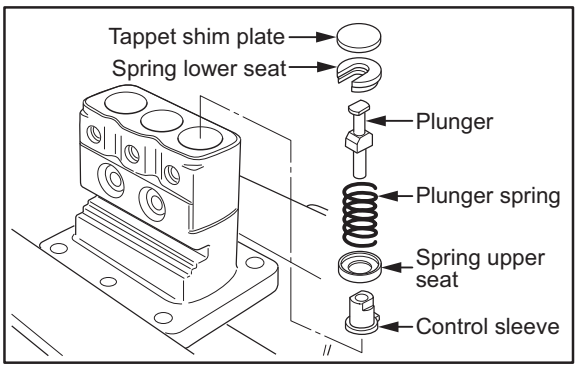

Removing plunger

PREVIEW - YOUFIXTHIS.COM

Download full manual at youfixthis.com

2.5 Reassembling starter

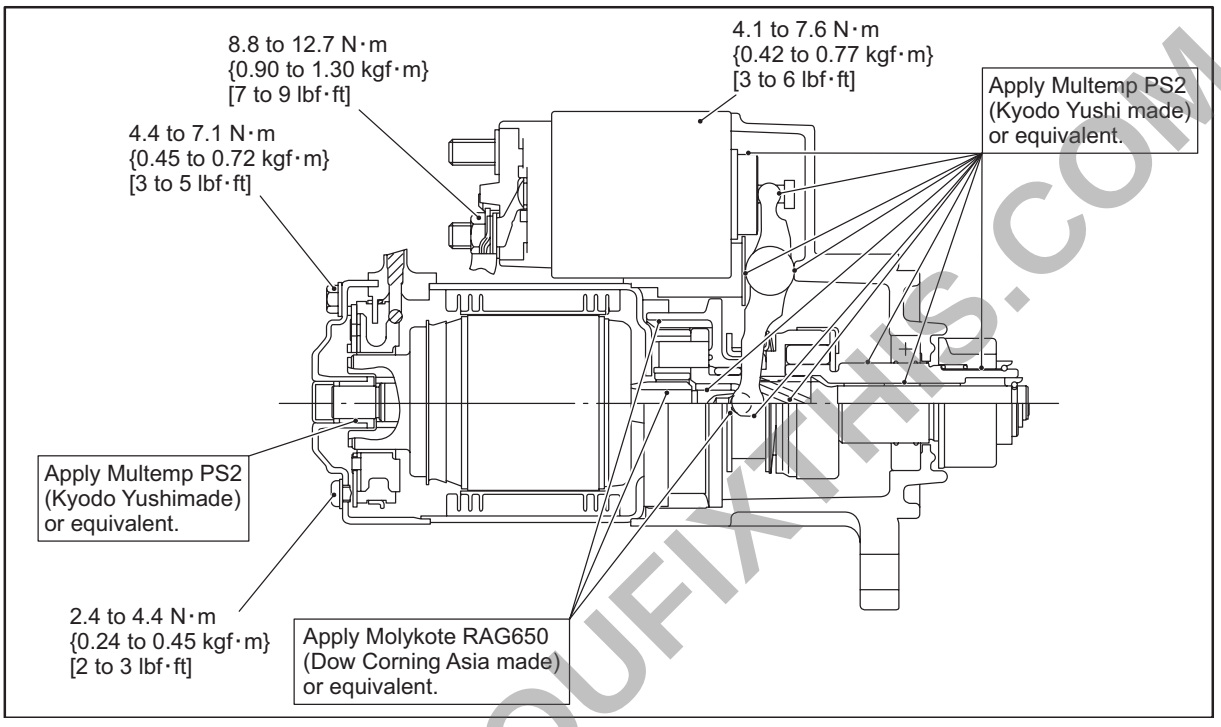

Reassembling starter

2.5.1 Applying grease

CAUTION

To avoid mixing of different greases, remove old grease before applying new grease.

Make sure that the starter mounting surface, brushes, commutator and other electric current conducting components are free from grease.

When overhauling the starter, apply grease to the following sliding surfaces, gears and bearings.

(1)Areas to which Multemp PS2 (Kyodo Yushi made) or the equivalent is applied

Plunger surface (a small amount)	Spline of gear shaft
Shaft sliding area of overrunning clutch	Sliding area between lever and overrunning clutch
Gear shaft	Bearing of gear shaft
Pinion gear fitting surface	Rear bearing

(2)Areas to which Molykote RAG650 (Dow Corning Asia made) or the equivalent is applied

Ball	Gear shaft, gear and internal gear of armature

PREVIEW - YOUFIXTHIS.COM

Download full manual at youfixthis.com

PREVIEW ONLY

You're viewing 25 of 680 pages

The full manual includes:

- All 680 pages, complete
- Searchable PDF (find any keyword)
- No watermarks
- Instant download
- Print-ready quality

GET FULL MANUAL NOW

New Holland E18SR, CX17B Repair Manual

Scan or click anywhere
youfixthis.com

Click anywhere on this page to get the full manual