HYDRAULIC EXCAVATOR

SHOP MANUAL model E215BJ

INDEX

1	SPECIFICATIONS SECTION
2	MAINTENANCE SECTION
3	SYSTEM SECTION
4	DISASSEMBLY SECTION
5	TROUBLESHOOTING
6	ENGINE SECTION
7	PROCEDURE OF INSTALLING OPTIONS SECTION

PREVIEW - YOUFIXTHIS.COM

NEW HOLLAND

Print No. 84163741

Download full manual at youfixthis.com

11.1 TIGHTENING TORQUES FOR CAPSCREWS AND NUTS

Tables Table11-1 and Table11-2 indicate tightening torques applicable to cases where no special note is given.
Overtightening of bolts may result in a twist-off and a fracture under load.
Insufficient tightening may lead to a loosening or loss of bolts. Always tighten bolts to proper torques.

Table11-1 Tightening torque for metric coarse threads (not plated)

Unit : N•m (lbf•ft)

Classification		4.8T		7T		10.9T	
Nominal size		No lubrication	Oil lubrication	No lubrication	Oil lubrication	No lubrication	Oil lubrication
M6	P=1	4.4±0.5 (3.2±0.4)	3.7±0.4 (2.7±0.3)	9.6±1.0 (7.1±0.7)	8.1±0.8 (6.0±0.6)	17.4±1.8 (12.8±1.3)	14.7±1.5 (10.8±1.1)
M8	P=1.25	10.7±1.1 (7.9±0.8)	9.0±0.9 (6.6±0.7)	23.5±2.0 (17.3±1.5)	19.6±2.0 (14.5±1.5)	42.2±3.9 (31.1±2.9)	35.3±3.9 (26.0±2.9)
M10	P=1.5	21.6±2.0 (15.9±1.4)	17.9±1.8 (13.2±1.3)	46.1±4.9 (34.0±3.6)	39.2±3.9 (28.9±2.9)	83.4±8.8 (61.5±6.5)	70.6±6.9 (52.1±5.1)
M12	P=1.75	36.3±3.9 (26.8±2.9)	31.4±2.9 (23.2±2.1)	79.4±7.8 (58.6±5.8)	66.7±6.9 (49.2±5.1)	143±15 (105±11)	121±12 (89.2±8.9)
M14	P=2	57.9±5.9 (42.7±4.4)	49.0±4.9 (36.1±3.6)	126±13 (92.9±9.6)	106±10 (78.2±7.4)	226±20 (167±15)	191±19 (141±14)
M16	P=2	88.3±8.8 (65.1±6.5)	74.5±6.9 (55.0±5.1)	191±20 (141±15)	161±16 (119±12)	343±39 (253±29)	284±29 (209±21)
M18	P=2.5	122±12 (90.0±8.9)	103±10 (75.8±7.2)	265±29 (195±21)	226±20 (167±15)	481±49 (355±36)	402±39 (297±29)
M20	P=2.5	172±17 (127±13)	144±14 (106±10)	373±39 (275±29)	314±29 (232±21)	667±69 (492±51)	559±59 (412±44)
M22	P=2.5	226±20 (167±15)	192±20 (142±15)	500±49 (369±36)	422±39 (311±29)	902±88 (665±65)	755±78 (557±58)
M24	P=3	294±29 (217±21)	235±29 (173±21)	637±69 (470±51)	520±49 (383±36)	1160±118 (856±87)	941±98 (694±72)
M27	P=3	431±39 (318±29)	353±39 (260±29)	941±98 (694±72)	765±78 (564±58)	1700±167 (1250±123)	1370±137 (1010±101)
M30	P=3.5	588±59 (434±44)	490±49 (361±36)	1285±127 (948±94)	1079±108 (796±80)	2300±235 (1700±173)	1940±196 (1430±145)
M33	P=3.5	794±78 (586±58)	667±69 (492±51)	1726±177 (1270±131)	1451±147 (1070±108)	3110±314 (2290±232)	2610±265 (1930±195)
M36	P=4	1030±98 (760±72)	863±88 (637±65)	2226±226 (1640±167)	1863±186 (1370±137)	4010±402 (2960±297)	3360±333 (2480±246)

PREVIEW - YOUFIXTHIS.COM

Download full manual at youfixthis.com

21.1 SUMMARY OF MECHATRO CONTROL SYSTEM

21.1.1 MECHATRO CONTROL SYSTEM IN GENERAL

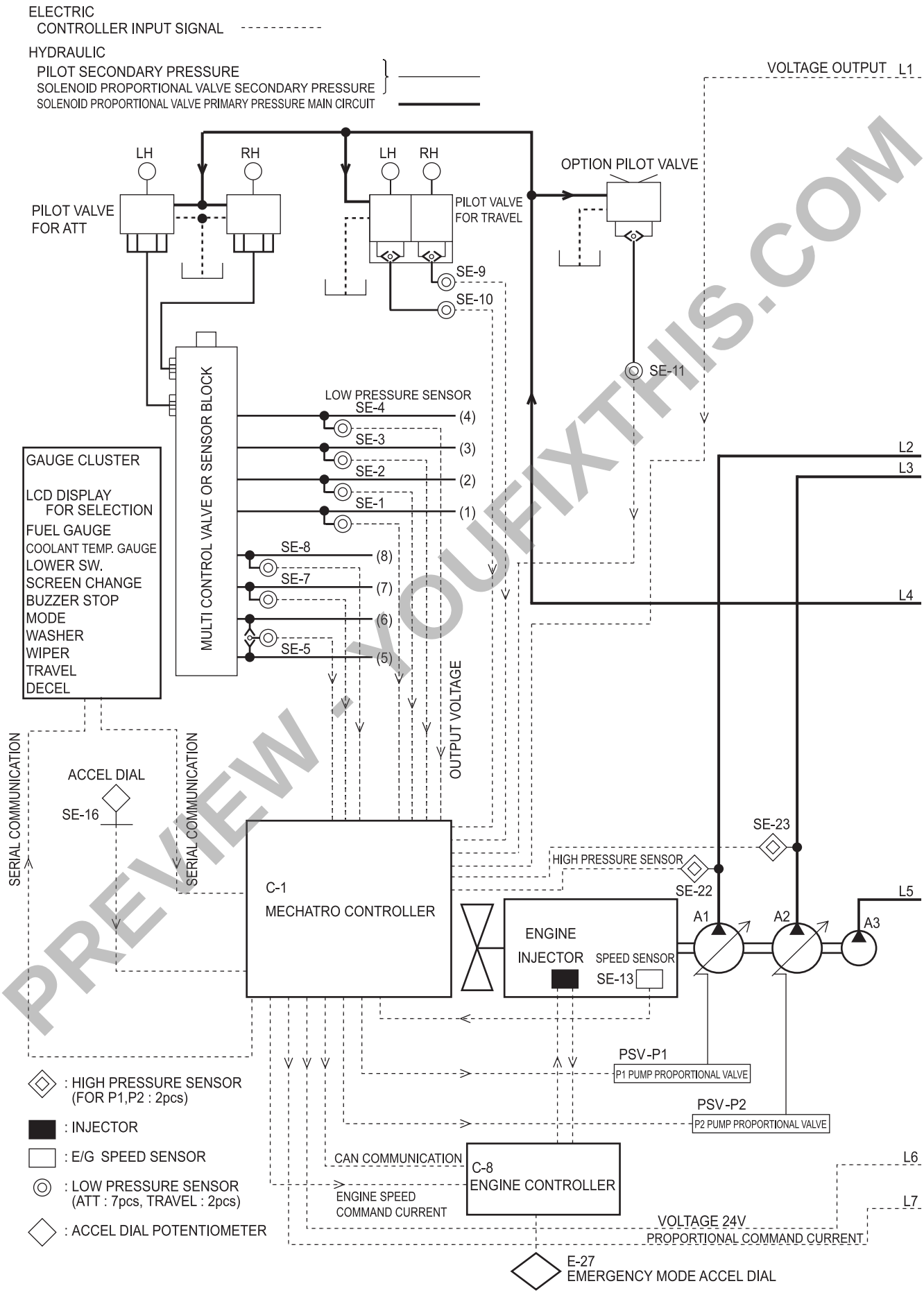

PREVIEW - YOUFIXTHIS.COM

Download full manual at youfixthis.com

31.1 EXPLAINING CHAPTER OF WHOLE DISASSEMBLY & ASSEMBLY

31.1.1 FORM FOR CHAPTER OF DISASSEMBLY & ASSEMBLY

This chapter is consist of 3-Section as follows.

(1) ATTACHMENTS .....Chapter 32
   1) Removing and Installing
   2) Disassembling and Assembling
      a. Cylinder

(2) UPPER STRUCTURE .....Chapter 33
   1) Removing and Installing
   2) Disassembling and Assembling
      a. Hydraulic pump
      b. Control Valve
      c. Pilot Valve (ATT)
      d. Pilot Valve (Travel)
      e. Slewing Motor
      f. Swivel Joint

(3) TRAVEL SYSTEM .....Chapter 34
   1) Removing and Installing
   2) Disassembling and Assembling
      a. Travel Motor

31.1.2 INDICATION OF TIGHTENING TORQUE

Tightening torque is indicated as follows, for example ;
T=98N•m(72 lbf•ft)
Tolerance is ±10% unless otherwise specified.

- Refer to "Chapter 11 TOOLS" for standard tightening torque.

PREVIEW - YOUFIXTHIS.COM

Download full manual at youfixthis.com

Preface

Troubleshooting provides process locating for the cause of trouble in the order that trouble occurred. This manual describes how to solve the specific phenomenon systematically as early as possible. For troubleshooting concerning the inside of equipment, refer to troubleshooting for each manual of equipment.

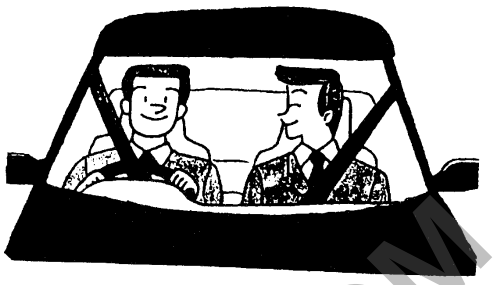

Fig. 46-1 Attending the field to verify actual thing.

46.1 JUDGMENT OF ACTUAL THING AT SITE

(1) Get to the site as quickly as possible.
Verify model, serial number, situation of trouble and field, and notify person of arrival time.

(2) Verify background of trouble occurred

1) Model name and serial number

2) Kind of attachment
Check that the combination of attachment is proper or that the operating method is not unreasonable.

3) Operating time by hour-meter

4) History of trouble occurred and additional works.

5) Recurrence of past trouble, or problems on the additional works.



Fig. 46-2 Verifying background of trouble occurred.

(3) How to diagnose trouble

1) Verify defective part

2) Make the condition of trouble again

3) Where defective parts can not be verified, surmise causes systematically.

4) Verify reasons for surmise

5) Report methods, procedure, and period for repairing to user.

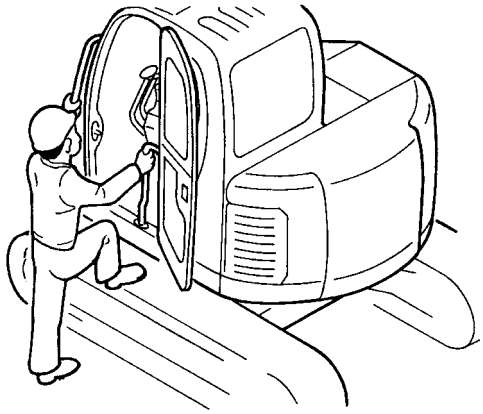

Fig. 46-3 Confirm the symptoms of the trouble.

(4) Explanation of the cause of trouble

1) Explain the cause of trouble to clients. For example, oil leak through piston is caused by flaws on the piston rod. And the method of using the machines should be explained so that the same kind of trouble does not reoccur.

2) Treatment of damaged parts
The damaged parts to be claimed and returned are evidence so they should be handled with care. Protect them from entry of water, soils, etc. into port of hydraulic unit, etc. and return them. And also use care not to flaw and damage those surfaces.



Fig. 46-4 Diagnosing fail by means troubleshooting.

PREVIEW - YOUFIXTHIS.COM

Download full manual at youfixthis.com

HINO DIESEL ENGINE WORKSHOP MANUAL

J05E-TA

PREVIEW - YOUFIXTHIS.COM

HINO

(20t)

KSS-SMJ5-E003E

2008.7

Download full manual at youfixthis.com

(13)Always use the proper tools that are in good condition and that are suited for the job at hand. Be sure you understand how to use them before performing any service work.

(14)Reinstall all fasteners with the same part number. Do not use a lesser quality fastener if replacements are necessary.

(15)Repairs which require welding should be performed only with the benefit of the appropriate reference information and by personnel adequately trained and knowledgeable in welding procedures. Determine type of metal being welded and select correct welding procedure and electrodes, rods or wire to provide a weld metal strength equivalent at least to that of the parent metal. Make sure to disconnect battery before any welding procedures are attempted.

(16)Do not damage wiring during removal operations. Reinstall the wiring so it is not damaged nor will be damaged in operation of the machine by contacting sharp corners, or by rubbing against some object or hot surface. Do not connect wiring to a line containing fluid.

(17)Be sure all protective devices including guards and shields are properly installed and functioning correctly before starting a repair. If a guard or shield must be removed to perform the repair work, use extra caution and replace the guard or shield after repair is completed.

(18)The maintenance and repair work while holding the bucket raised is dangerous due to the possibility of a falling attachment. Don't fail to lower the attachment and place the bucket to the ground before starting the work.

(19)Loose or damaged fuel, lubricant and hydraulic lines, tubes and hoses can cause fires. Do not bend or strike high pressure lines or install ones which have been bent or damaged. Inspect lines, tubes and hoses carefully. Do not check for leaks with your hands. Very small (pinhole) leaks can result in a high velocity oil stream that will be invisible close to the hose. This oil can penetrate the skin and cause personal injury. Use card-board or paper to locate pinhole leaks.

(20)Tighten connections to the correct torque. Make sure that all heat shields, clamps and guards are installed correctly to avoid excessive heat, vibration or rubbing against other parts during operation. Shields that protect against oil spray onto hot exhaust components in event of a line, tube or seal failure must be installed correctly.

(21)Do not operate a machine if any rotating part is damaged or contacts any other part during operation. Any high speed rotating component that has been damaged or altered should be checked for balance before reusing.

(22)Be careful when servicing or separating the tracks (crawlers). Chips can fly when removing or installing a track (crawlers) pin. Wear safety glasses and long sleeve protective clothing. Tracks (crawlers) can unroll very quickly when separated. Keep away from front and rear of machine. The machine can move unexpectedly when both tracks (crawlers) are disengaged from the sprockets. Block the machine to prevent it from moving.

PREVIEW - YOUFIXTHIS.COM

Download full manual at youfixthis.com

PREFACE

(1) Working Conditions

1) Workers :
More than one worker shall be 1st class service technician (having five years or more of field experience and having received training in the operation).

2) Equipment :
Jigs, tools, apparatuses and testers used in field service work shall be available commercially. The maintenance plant shall be equipped with a service shop, a crane and inspection apparatuses necessary for specific self inspection activities.

3) Place :
A flat land where work may be performed and to which a service car or a truck crane is accessible.

(2) Range of standard maintenance time

1) Standard maintenance time=Direct maintenance time×Preparation time

2) Direct maintenance time : Net time actually spent for maintenance

3) Spare time :
Time needed to move machines for service, prepare safety operations, discuss work, and process the needs of the body.

(3) Extra time (not included in the standard service time)

1) Repair time :
Machining, sheet metal, welding, melt cutting, folding and extracting bolts, servicing parts, and painting.

2) Items excluded from service time because of uncertainty in time :
Receiving a vehicle into shop, transfer, delivery, inspection on completion, investigation of causes of faults, diagnosis, and inspection.

3) Indirect time :
Time for ; field work, preparation of necessary parts before leaving for work, return for field work, waiting time because of user's convenience in the field, paper work after returning to shop, and preparation of bills.

4) Special time : Work at early morning, at midnight and on holidays are to be calculated separately.

5) Separate calculation : The operating time for service cars, trucks with a crane and crane trucks.

(4) Applicable machine for estimation of standard maintenance time

1) Standard machine

2) A well maintained and controlled machine with a standard combination of attachments which is used in a general environment.

PREVIEW - YOUFIXTHIS.COM

Download full manual at youfixthis.com

21.1.2 UNLOAD VALVE CONTROL

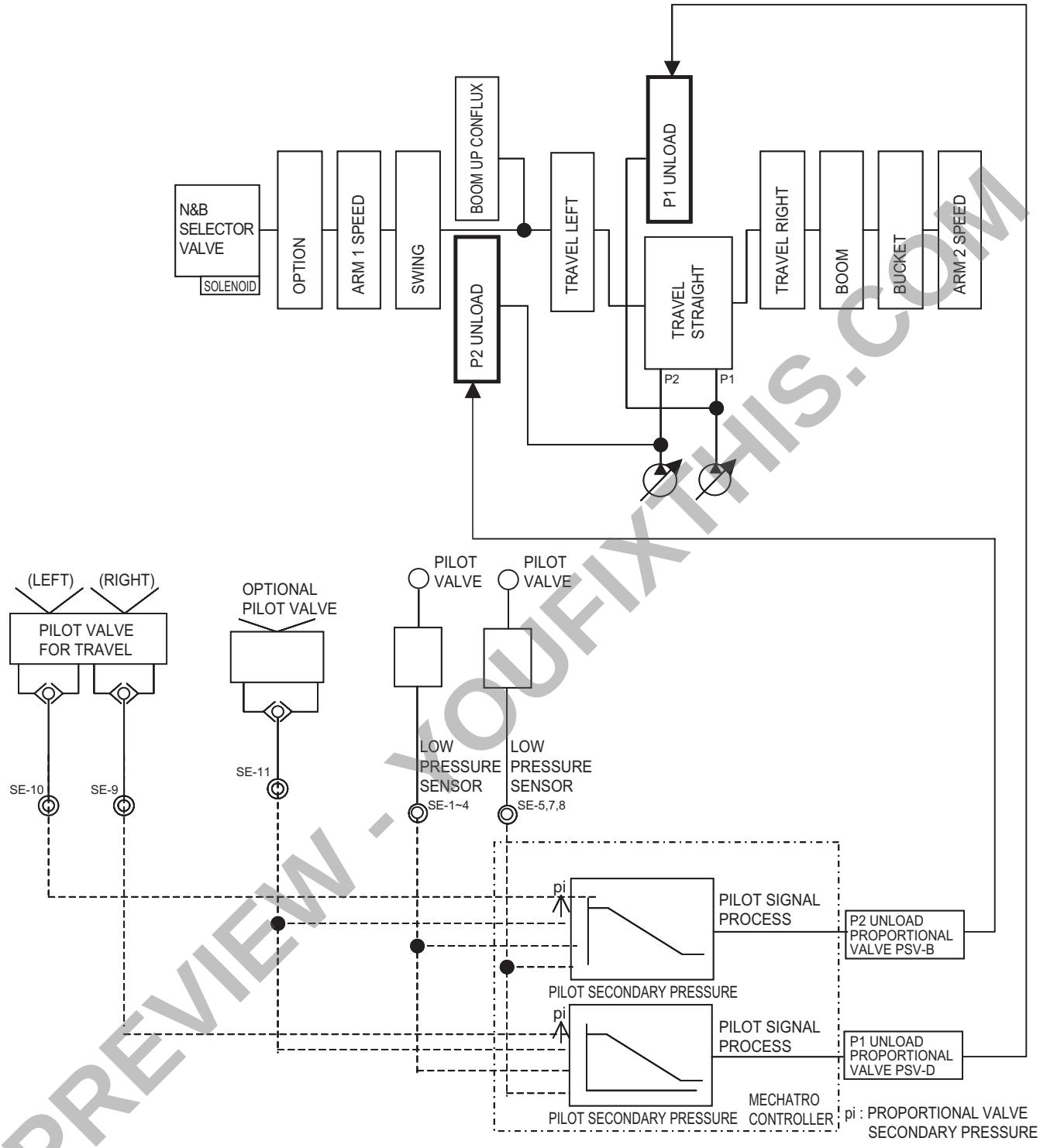

(1) On starting any one of operations, the control pilot secondary pressure switches spools and enters in respective low pressure sensors.

(2) The output voltage of low pressure sensor is input to mechatro controller and the mechatro controller processes pilot signal and outputs command according to the input voltage to each unload pressure proportional valve.

(3) Each unload pressure proportional valves output pilot secondary pressure according to the command output by mechatro controller and switches each unload spools.

(4) With this operation, the bleed opening according to lever manipulated movement is obtained, consequently the pump pressure which is used to actuate each actuators are delivered and makes each actuator start operating.

PREVIEW - YOUFIXTHIS.COM

Download full manual at youfixthis.com

22.2.2 N&B SPECIFICATION (OPTION)

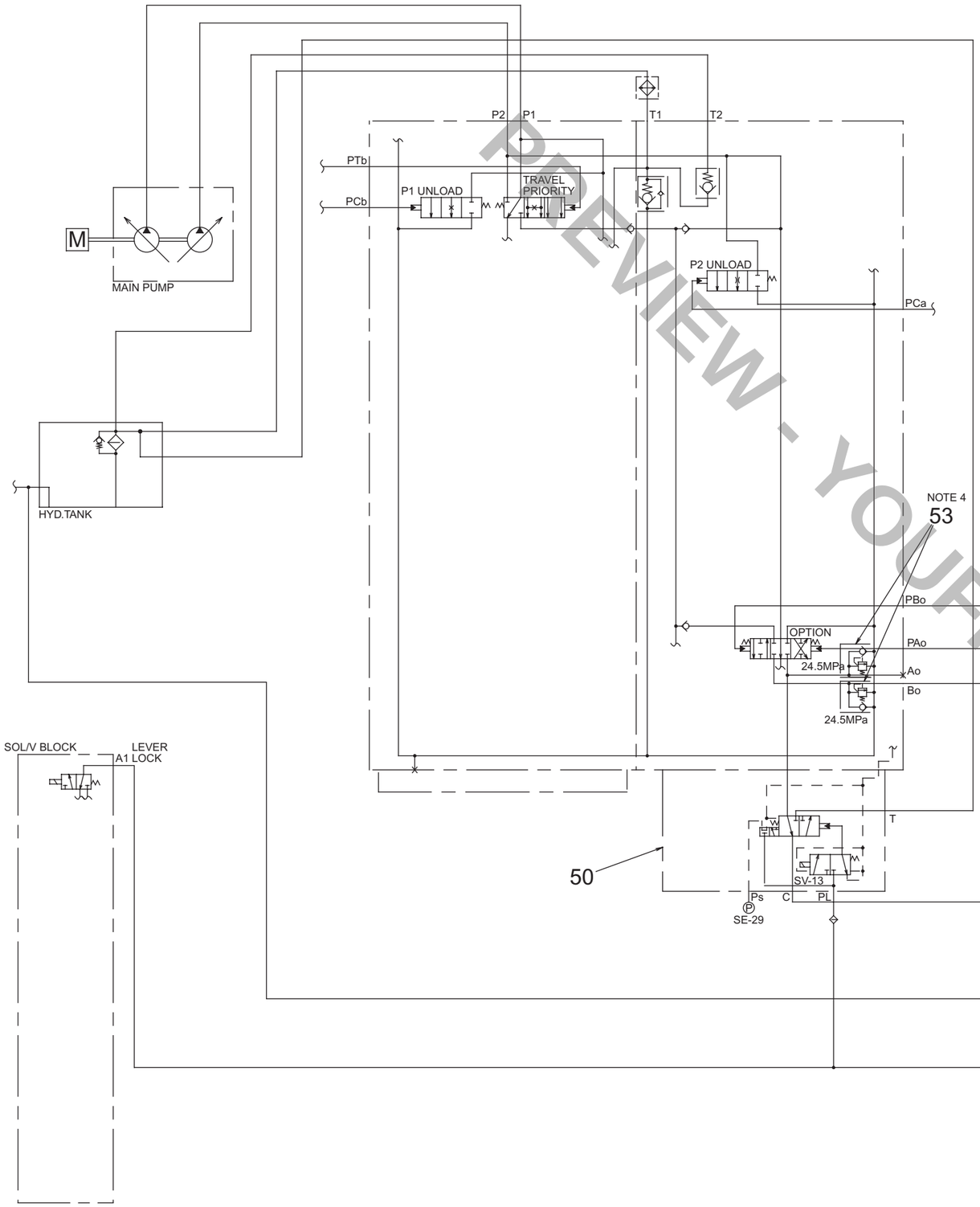

	N&B specification	YN01Z00162P1	
NO.	PARTS	PART No.	MODEL No.
50	SELECTOR VALVE	YN30V00104F1	VBY-174B
51	STOP VALVE	24100P3133F1	
52	PILOT VALVE	YN30V00080F1	16030-00000
53	RELIEF VALVE	YN22V00002F1	KRX16EK22

NOTE:

1. THIS HYDRAULIC CIRCUIT IS USED TO ADD TO STANDARD CIRCUIT.
2. SELECTION CONDITION AND PROPORTIONAL VALVE COMMAND WHEN ANY OF NIBBLER SINGLE & CONFLUX FLOW OR BREAKER IN SERVICE.

	SELECTION		COMMAND SIGNAL OF SOLENOID PROPORTIONAL VALVE (W: ○, W/O: –)				
	CONFLUX / SINGLE FLOW CHANGEOVER SWITCH	ELECTROMAGNETIC COMMAND SIGNAL OF SELECTOR VALVE (ITEM 50)(W:○,W/O:-)	P1 PUMP	P2 PUMP	TRAVEL STRAIGHT	P1 UNLOAD	P2 UNLOAD
CONFLUX FLOW OF NIBBLER	CONFLUX "ON"	–	○	○	○	○	○
SINGLE FLOW OF NIBBLER	CONFLUX "OFF"	–	–	○	–	–	○
BREAKER	CONFLUX "OFF"	○	–	○	–	–	○

3. WHEN USING NIBBLER, ACCORDING TO SPECIFICATION OF NIBBLER INSTALLED, CHOOSE CONFLUENCE OR SINGLE FLOW BY CONFLUENCE FLOW CHANGEOVER SWITCH.
4. ADJUST OVERLOAD RELIEF VALVE OF OPTIONAL PORT TO CUSTOMIZE SPECIFICATION ORDINARY SET PRESSURE.

YN01Z00162P1 01

PREVIEW - YOUFIXTHIS.COM

Download full manual at youfixthis.com

23.3.7-1 FLOOR HARNESS (2/3) : YN13E01449P3

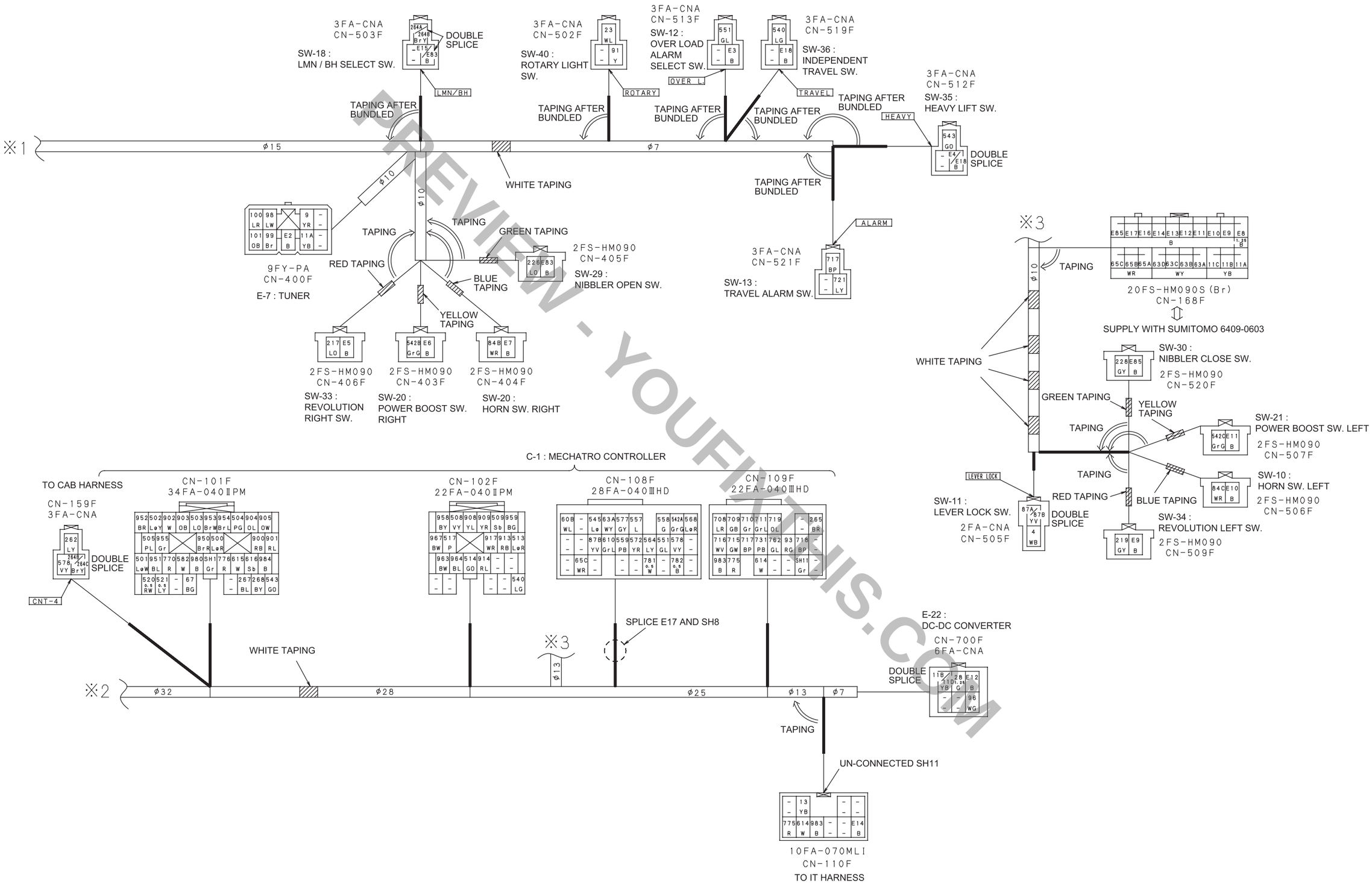

PREVIEW - YOUFIXTHIS.COM

Download full manual at youfixthis.com

(5) Arm operation

1) In arm out operation

On starting arm out operation, the pilot pressure enters ports PBa1 and PBa2, and arm 1 spool (302) moves rightward against the force of springs (321) (322), and simultaneously the secondary pressure of solenoid proportional valve [X2] acts on port PCa and switches unloading spool (310).

And the pilot pressure also enters PBa2, and arm 2 spool (308) is switched against the force of springs (321) (328) and the secondary pressure of solenoid proportional valve [X1] acts on port PCb and switches unloading spools (309).

The hydraulic oil delivered by hydraulic pump P2 flows into parallel passage (56), pushes and opens load check valve LCa (511), and flows into AR chamber through between the perimeter of arm 1 spool (302) and casing through U-shaped passage.

In the meantime, the hydraulic oil delivered by hydraulic pump P1 flows through center by-pass passage (52) and pushes and opens load check valve LCAT2 (511) and enters U-shaped passage, and pushes and opens load check valve LCAP2 (515) provided with orifice, and flows into U-shaped passage. And then the hydraulic oil flows through between the perimeter of arm 2 spool (308) and casing, and enters AR chamber through casing inside passage (RR) and confluences the hydraulic oil from hydraulic pump P2 side.

The conflux hydraulic oil opens lock valve poppet CRar (514) and is supplied to arm cylinder rod side (R).

In the meantime, the return oil from arm cylinder head side (H) flows through between the perimeter of arm 1 spool (302) and casing and passes though low pressure circuit (D') and casing inside passage (HH) and then flows into low pressure circuit (D') through between the perimeter of arm 2 spool (308) and casing.

The return oil in low pressure circuit (D') returns to hydraulic tank through tank port T1 without passing through boost check valve (517).

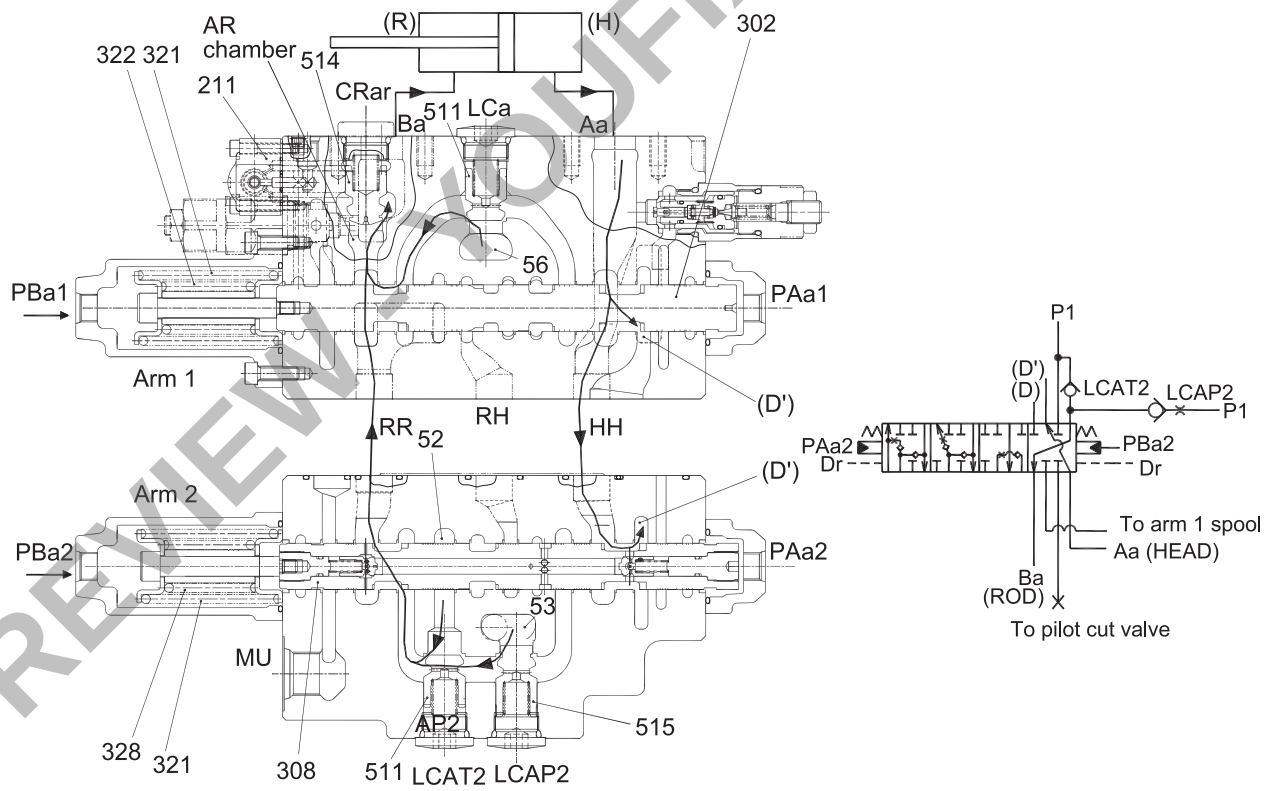

Fig. 24-46 In arm out operation

PREVIEW - YOUFIXTHIS.COM

Download full manual at youfixthis.com

File No. Name of part Part No. Use Applicable Machine	Specification	Description
E - 13 Alarm YN53S00004F1 Travel alarm YN11 - 45001 ~ YQ11 - 06001 ~ LC10 - 07001 ~ YC10 - 03501 ~	Model: BA3111A Rated voltage: DC 12V~36V	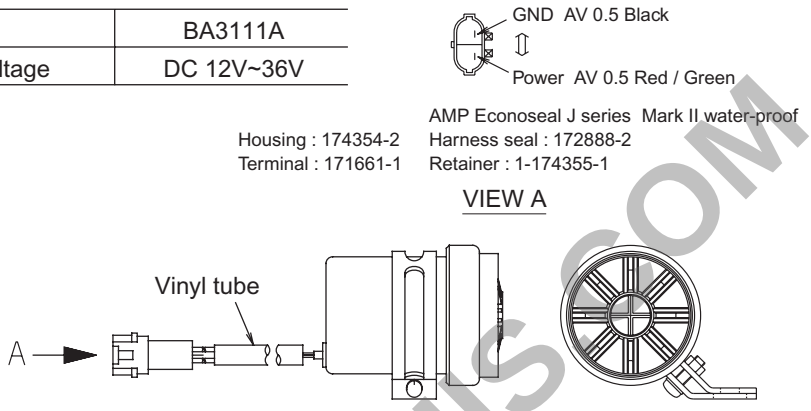
E - 14 Cigarette lighter YN81S00003P1 Cigarette lighter YN11 - 45001 ~ YQ11 - 06001 ~ LC10 - 07001 ~ YC10 - 03501 ~	Model: 409137-0000A Rated voltage: DC 24V Max. current: 5A Recovery time: Less than 18sec Insulation resistance: More than 3MΩ /500V megger Thermal fuse: Fusing temp.180~250℃	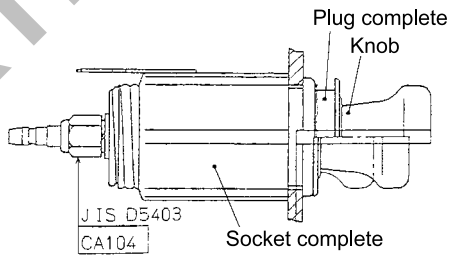
E - 15 Fusible link LC13E01175S002 Fuse YN11 - 45001 ~ YQ11 - 06001 ~ LC10 - 07001 ~ YC10 - 03501 ~	Type: Slow blow fuse Allowable current: 100A	
E - 22 DC-DC converter YT77S00001P1 DC24V→DC12V YN11 - 45001 ~ YQ11 - 06001 ~	Input voltage: DC 24V Output voltage: DC 12V Output current: 2.5A Max Ground: Negative	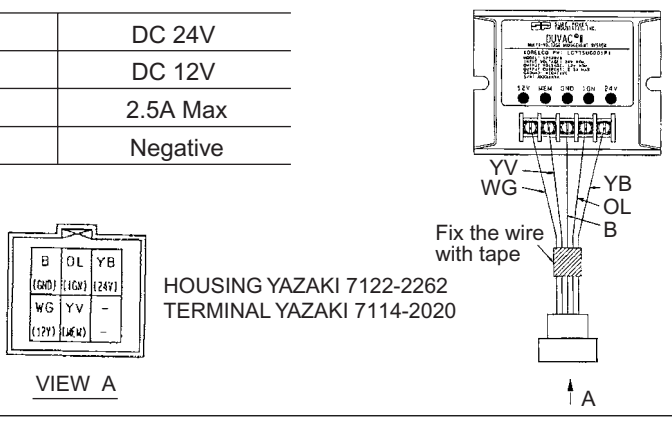

PREVIEW - YOUFIXTHIS.COM

Download full manual at youfixthis.com

(2) Failures of sensors

1) HL.* is indicated on 3 digits segment.

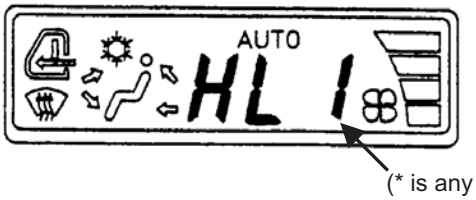

Check the inner air sensor or the harness for disconnection and short circuit, and also connectors for disconnection.

(* is any of the numbers 0 to 9.)

2) **E and ☼ mark are flickering.

(** is displayed leaving the present set temperature value.)



Check evaporator sensor or the harness for disconnection and short circuit, and also connectors for disconnection.

Note) The above displays in items 1) and 2) are indicated by 3 digits segment when error occurred under the condition the panel ON/OFF switch is ON.
And, after correction of failure if the panel ON/OFF switch is switched from OFF to ON, the error indication is released.

(3) Communication error of control amplifier and panel

1) E is indicated on the only use segment of display.

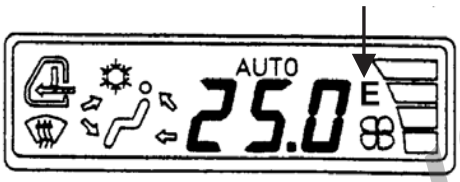

Check the harness of control amplifier and panel for disconnection, and connectors for poor connection.

PREVIEW - YOUFIXTHIS.COM

Download full manual at youfixthis.com

(11)Remove beam (4)

1) Loosen 6 sems bolts (41) M12×25.
2) Remove beam (4).

: 19 mm
Weight : 13kg (29 lbs)

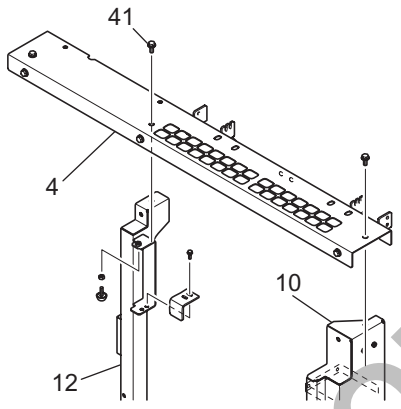

Fig. 33-21 Removing and installing of beam (4)

(12)Remove pillar (10), (12)

Remove battery relay box in advance and remove pillar (10). (See Chapter 23)

1) Loosen 2 sems bolts (42) M12×30.
2) Loosen 2 sems bolts (43) M12×40.
3) Loosen a sems bolt (51) M12×35.

: 19 mm

4) Remove pillar (10), (12).
Weight : Pillar (10) : 12kg (26 lbs)

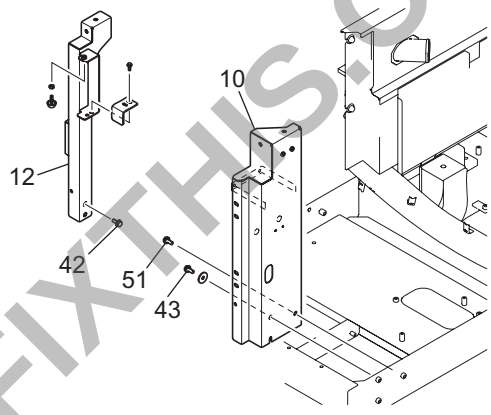

Fig. 33-22 Removing and installing of pillar (10),(12)

(13)Remove guard assy (18) and (13)

1) Loosen 4 capscrews (33) M12×20, and remove guard assy (18).
2) Loosen 2 sems bolts (42) M12×20, and remove guard assy (13).

: 19 mm
Weight : 12kg (26 lbs)

(14)Remove guard (19)

Loosen 6 sems bolts (41) M12×25, and remove guard (19).

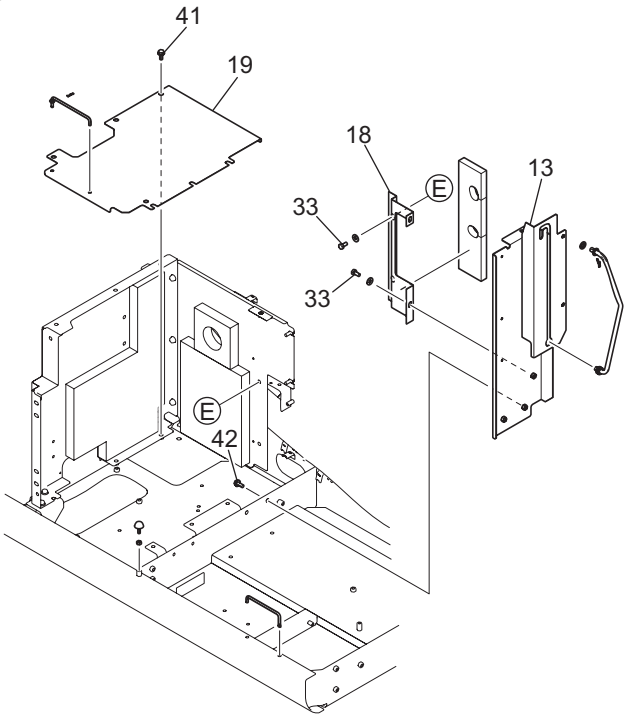

Fig. 33-23 Removing and installing of guard assy and guard

PREVIEW - YOUFIXTHIS.COM

Download full manual at youfixthis.com

33.2.1.2 REGULATOR

33.2.1.2.1 Structural exploded view

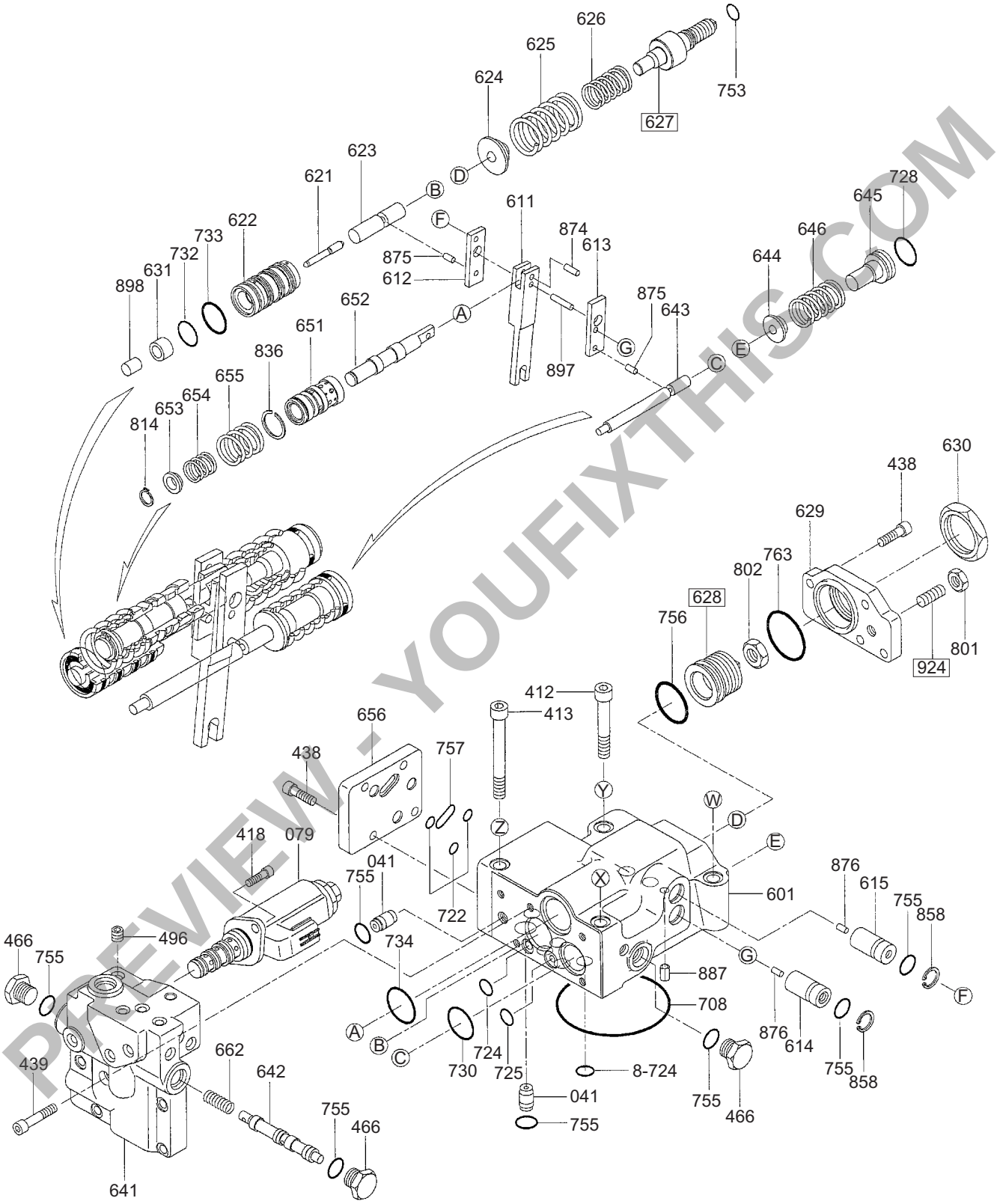

PREVIEW - YOUFIXTHIS.COM

Fig. 33-109 Structural exploded view of regulator

Download full manual at youfixthis.com

6) Guide/plunger and relulation unit replacement
   - Extract the regulation units from the body (using flat nose pliers).
   - Inspect the regulation units. If defects are detected on the parts, replace the 4 units.

7) Return spring replacement :
   - Extract the return springs from the body (using flat nose pliers).

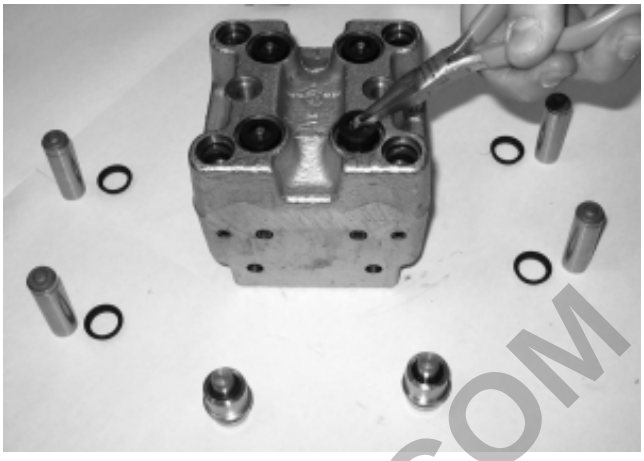

Fig. 33-217

   - Inspect the return springs. If defects are detected, replace the 4 springs.

8) Reassemble parts in reverse order.

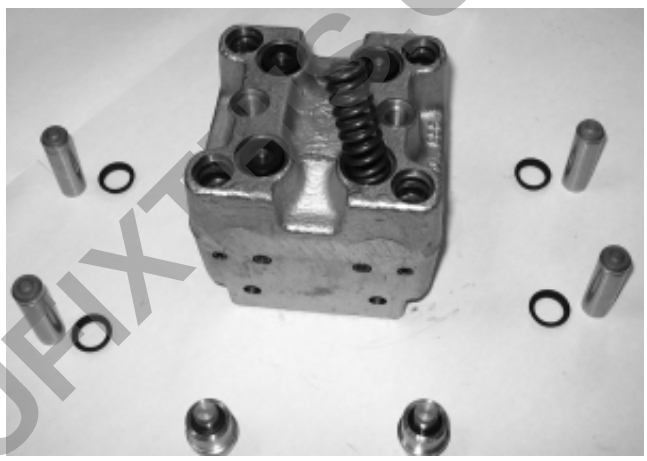

Fig. 33-218

(7) Throttle kit replacement

1) Remove
   - The pilot control unit from the machine
   - Both rubber boots (See 33.2.4.2 (1))
   - Both switch plates (See 33.2.4.2 (2))
   - The retaining plate (See 33.2.4.2 (4))
   - The damping plungers and springs (See 33.2.4.2 (5))

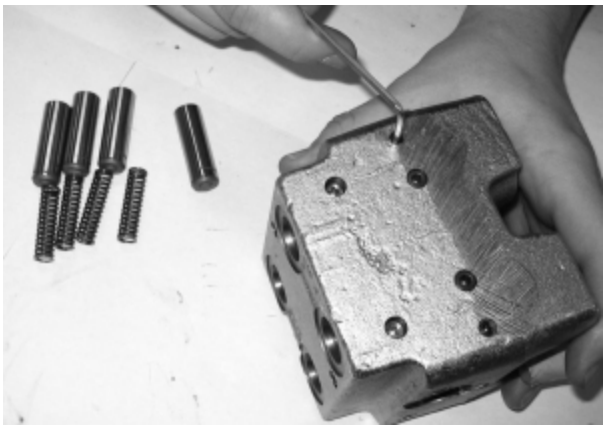

Fig. 33-219

PREVIEW - YOUFIXTHIS.COM

Download full manual at youfixthis.com

5) Attach floating seal (6) to roller side
Fit floating seal (6) to inner holes on both ends of roller (1).

- Check that the seal surface is free from flaws, rusts, etc. before reusing the floating seal.

6) Inserting roller (1)
Insert roller (1) from the side where collar (2), O-ring (7) is not press-fitted to the shaft (3).

7) Installing O-ring (7)
Install O-ring (7) to groove on shaft.

- Grease O-ring.
- Replace O-ring with new one without fail at reassembling.

8) Press fitting collar (2)
Press-fit collar (2) to shaft (3).

- Press-fit collar (2) on aligning pin (5) hole.

9) Inserting pin (5)
Press-fit pin (5) in to the pin hole mating pin hole of collar (2) with pin hole on the end side of shaft (3).

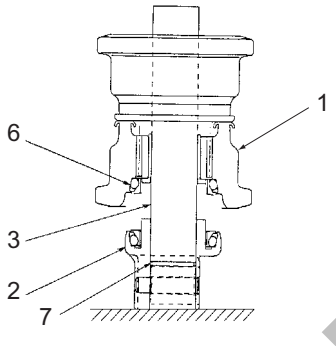

Fig. 34-37 Inserting roller (1)

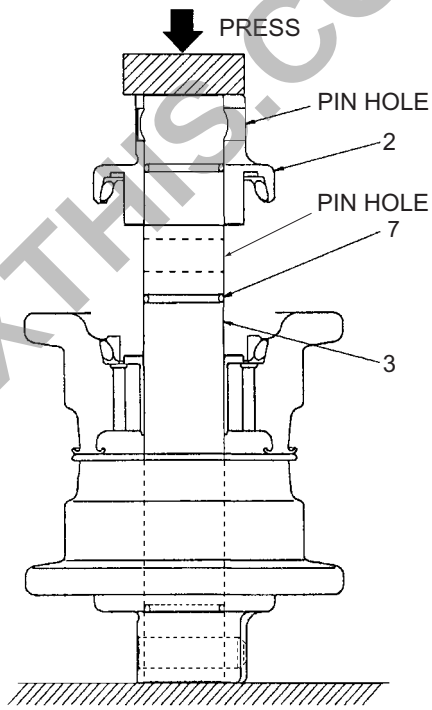

Fig. 34-38 Installing O-ring (7), collar (2)

10) Filling oil
Remove plug (8) and fill in 160cc (9.8cu•in) of engine oil API grade CD #30.

11) Check it for leakage
Before tightening plug (8), check it for leakage in the condition of air pressure 0.2 MPa (29 psi).

12) Installing plug (8)
Apply oil resistant sealant on plug (8), and tighten it in the plug hole on the collar (2) end face.
: 6 mm,
Tightening torque :
21.6~24.5 N•m (15.9~18.1 lbf•ft)

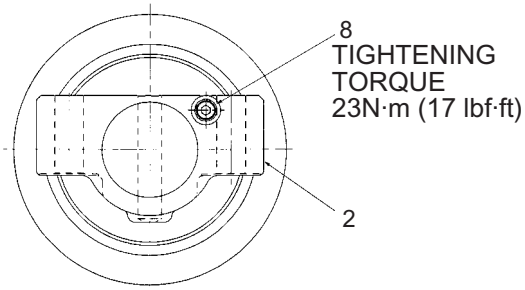

Fig. 34-39 Installing filling oil plug (8)

CAUTION

After assembling the lower roller, confirm that oil is not leaking and that the roller rotates smoothly by hand.

PREVIEW - YOUFIXTHIS.COM
Download full manual at youfixthis.com

Table46-13

Error code		B023		
Trouble		Boom down pressure sensor's wiring is disconnecting.		
Judging condition		The input voltage from boom down pressure sensor is 0.1V or less.		
Symptom		The boom down operability becomes poor.		
Control in the event of failure		Set proportional valve output rate of P1 and P2 pumps to 0mA. (Hydraulic pump emergency mode) Set output of P1 unload proportional valve to 0mA. (Valve emergency mode)		
Returned in normal condition		It returns automatically in normal condition.		
Service diagnosis checking screen		Screen No.	5	B-2 BOOM LOWER
		Screen No.		
		Screen No.		
Checking object				Checking contents and remedy
1	• Boom down pressure sensor SE-4			When B023 is cancelled and other error occurs after exchanging the connector with other sensor. Check sensor unit for possible failure. If failure found, replace it.
2	• Wiring between boom down pressure sensor and controller CN-127F CN-101F			When B023 is displayed after the connector is exchanged with other sensor. Check wiring for possible failure according to the wiring checking procedure and repair it if necessary.
3	• Mechatro controller			Check that the error is corrected after replacement of controller.

Table46-14

Error code		B024		
Trouble		Boom down pressure sensor's power source is shortcut.		
Judging condition		The input voltage from boom down pressure sensor is 4.7V or more.		
Symptom		The boom down operability becomes poor.		
Control in the event of failure		Set proportional valve output rate of P1 and P2 pumps to 0mA. (Hydraulic pump emergency mode) Set output of P1 unload proportional valve to 0mA. (Valve emergency mode)		
Returned in normal condition		It returns automatically in normal condition.		
Service diagnosis checking screen		Screen No.	5	B-2 BOOM LOWER
		Screen No.		
		Screen No.		
Checking object				Checking contents and remedy
1	• Boom down pressure sensor SE-4			When B024 is cancelled and other error occurs by turning starter switch on after exchanging the connector with other sensor. Check sensor unit for possible failure. If failure found, replace it.
2	• Wiring between boom down pressure sensor and controller CN-127F CN-101F			When B024 is displayed after turning the starter switch on after the connector is exchanged with other sensor. Check wiring for possible failure according to the wiring checking procedure and repair it if necessary.
3	• Mechatro controller			Check that the error is corrected after replacement of controller.

PREVIEW - YOUFIXTHIS.COM

Download full manual at youfixthis.com

No.	Sections	Contents/normal value		Corrective action, others
12	Remote control valve	Check targeted remote control valve	Check that spool is free from abnormal damage and spring is free from breakage	Replace
13	Main relief valve <Trouble> Relief pressure is low.	Check set pressure	•See Service Diagnosis Data List Operation No.3 boom up full lever and relief	Reset or replace
14	Over load relief valve <Trouble> P1, P2 pressure is low.	Visual check (Head side)	Pressure is 32MPa or more in arm in and relief. Free from dust entered in over load relief valve. Seat is free from abnormality	When only relief pressure of arm in is low, replace valve
15	Over load relief valve <Trouble> P1, P2 pressure is low.	Visual check (Rod side)	Pressure is 32MPa or more in arm out and relief. Free from dust entered in over load relief valve. Seat is free from abnormality.	When only relief pressure of arm out is low, replace valve
16	Arm 1 spool <Trouble> P1, P2 pressure is high.	Visual check	When removing, free from abnormal resistance against sliding Free from abnormal damage, etc on outside surface Spring is free from breakage.	Replace (Check on the casing side for damage)
17	Arm 2 spool <Trouble> P1, P2 pressure is high or low.	Visual check	When removing, free from abnormal resistance against sliding Free from abnormal damage, etc on outside surface Spring is free from breakage.	Replace (Check on the casing side for damage)
18	Check arm 2 spool and recirculation <Trouble> Arm in power is poor.	Disassembly and investigation	Free from abnormal resistance against sliding Spring is free from breakage.	Replace spool assembly
19	Check lock valve poppet <Trouble> Both P1, P2 pressures are high.	Visual check	Free from abnormal resistance against sliding Free from abnormal damage, etc on outside surface	Replace (Check on the casing side for damage)

(8) Slow independent arm out (in the air)

No.	Sections	Contents/normal value		Corrective action, others
1	Arm out pressure sensor	Carry out service diagnosis	•See Service Diagnosis Data List Operation No.8 arm out full lever and relief	Check and replace pressure sensor Check remote control valve
2	Remote control valve	Measure directly remote control pressure of arm out	Check that pressure is 3.0MPa or more in arm out full lever and high idling operation	Check remote control valve When equipped with multi control valve, check it while changing lever pattern
3	Pump pressure sensor	Carry out service diagnosis for P1, P2 pump pressures in operation.	•See Service Diagnosis Data List Operation No.9 arm out full lever and in operation	When there is difference between P1 and P2 pump pressures, check high pressure sensor
4	Actual measuring current value of P1/P2 unload proportional valve	Carry out service diagnosis	•No.8 D-1 P1 unload valve (cut valve) D-1 P2 unload valve (cut valve) •See Service Diagnosis Data List Operation No.8 Arm out full lever & relief	In case where the reading is largely differed from the actually measured value, check proportional valve and controller for possible failure.

PREVIEW - YOUFIXTHIS.COM

Download full manual at youfixthis.com

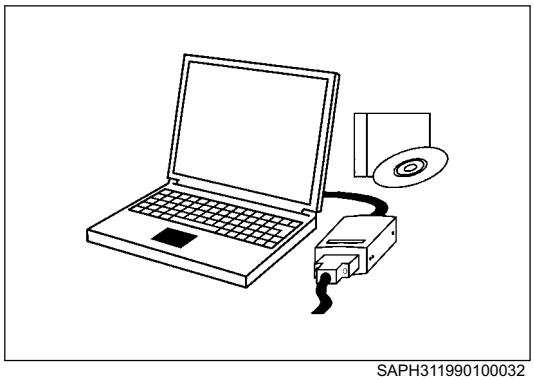

SAPH311990100032

3. Deletion of past failures

(1) To delete past failures of the engine ECU, use Hino–DX on the PC. (Refer to "HinoDX operation manual".)

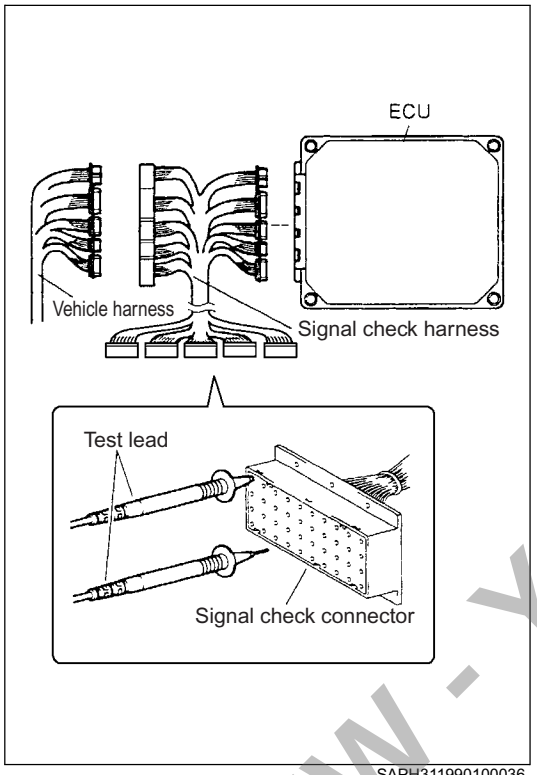

SAPH311990100036

4. Connection of signal check harness

(1) To prevent damage to the ECU connector and to improve accessibility, connect the signal check harness and put a testing rod on the signal check connector of the signal check harness for meaurement.

a. Disconnect the connector from the ECU.

⚠ **CAUTION** • **Do not break the locking tab of the connector.**

b. Connect the signal check harness to the machine harness and the ECU.
Signal check harness
(for common rail fuel injection system)
Part No.
09049-1080

PREVIEW - YOUFIXTHIS.COM

Download full manual at youfixthis.com

(4) Assemble the injection pipe temporarily and tighten the fixing bolt of the nozzle clamp holder.
Tightening torque : 25 N·m {250 kgf·cm, 1.8 lbf·ft}

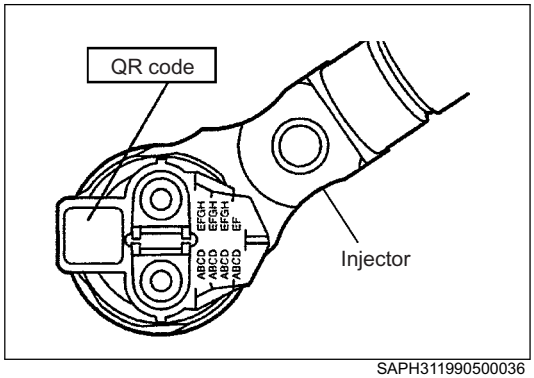

SAPH311990500036

3. Entry of injector correction value to the engine ECU (entry using HinoDX and QR code reader)

⚠ CAUTION
- **When the injector is replaced, it is necessary to enter the injector correction value (QR code) described on the new injector to the engine ECU. Incorrect entry of the correction value may result in faulty engine.**

NOTICE
- **Available entry methods of the injector correction value are the PC tool and the QR code reader.**
- **The flow of work is described in the following. If you want details regarding any procedure, however, refer to the PC Tools instruction manual.**

(1) Read the injector QR code with the scanner of the QR code reader and prepare the correction data file.
(2) Enter the injector correction value directly from the PC tools to the engine ECU.

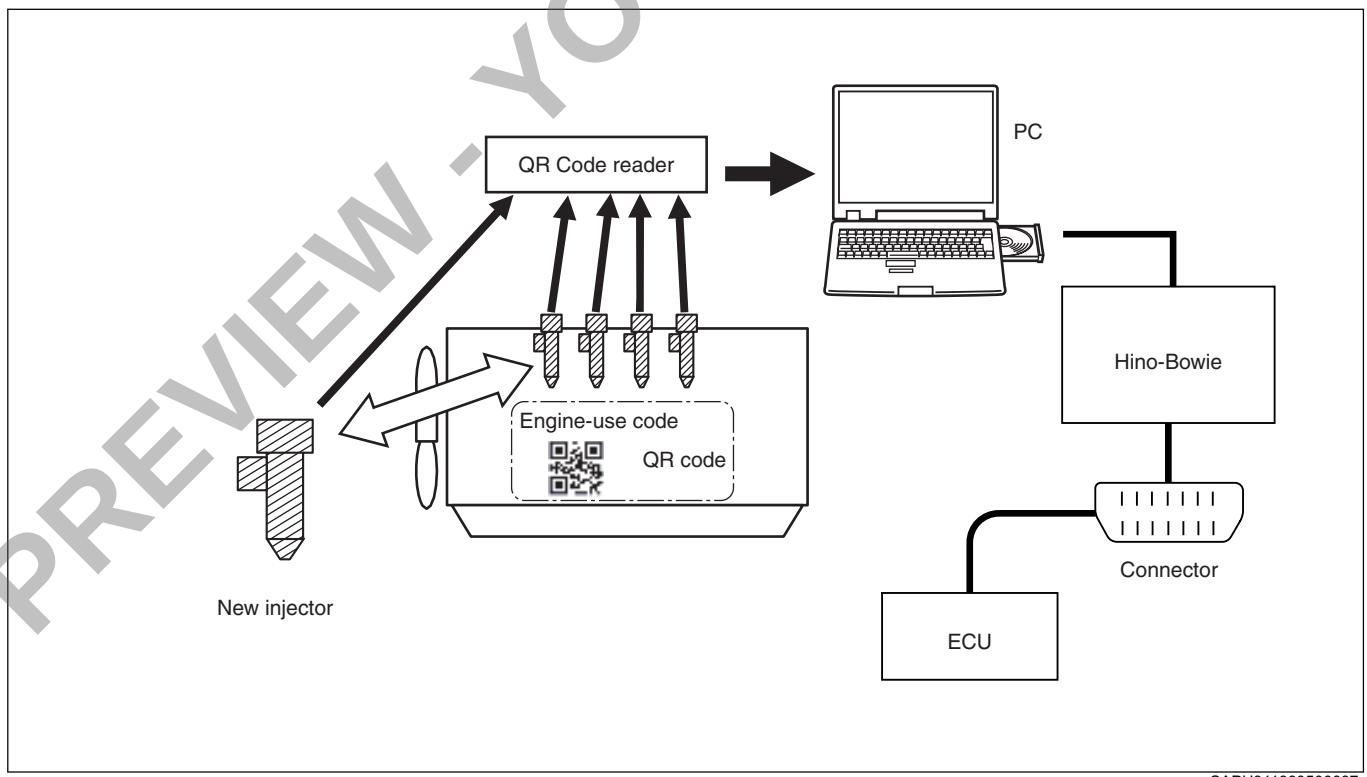

SAPH311990500037

PREVIEW - YOUFIXTHIS.COM

Download full manual at youfixthis.com

Replacement of crankshaft pulley

JP31199090704008

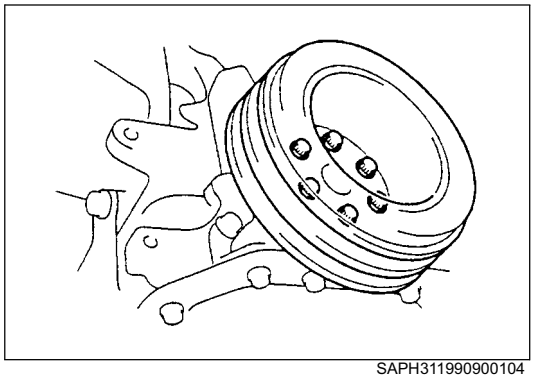

SAPH311990900104

1. Removal of crankshaft pulley

(1) Remove bolts and remove the crankshaft pulley.

NOTICE

- **Insert a large flat tip screwdriver into the flywheel gear from the flywheel housing inspection hole to prevent turning of the crankshaft.**

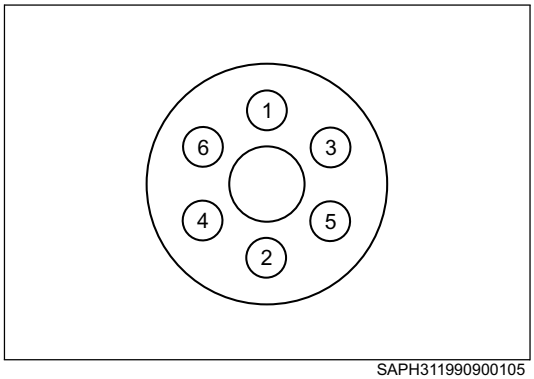

SAPH311990900105

2. Installation of crankshaft pulley

(1) Apply engine oil to the bolt seat and the bolt thread of the crankshaft pulley mounting bolt.

(2) Install the crankshaft pulley on the crankshaft and tighten it according to the figure.

Tightening torque : 118 N·m {1,200 kgf·cm, 87 lbf·ft}

NOTICE

- **Insert a large flat tip screwdriver into the flywheel gear from the flywheel housing inspection hole to prevent turning of the crankshaft.**

Replacement of flywheel

JP31199090704009

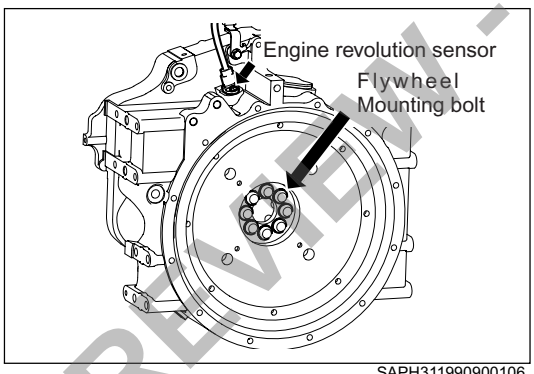

SAPH311990900106

1. Removal of flywheel

(1) Remove the engine revolution sensor.

(2) Remove bolts fixing the flywheel.

NOTICE

- **Insert a large flat tip screwdriver into the flywheel gear from the flywheel housing inspection hole to prevent turning of the crankshaft.**

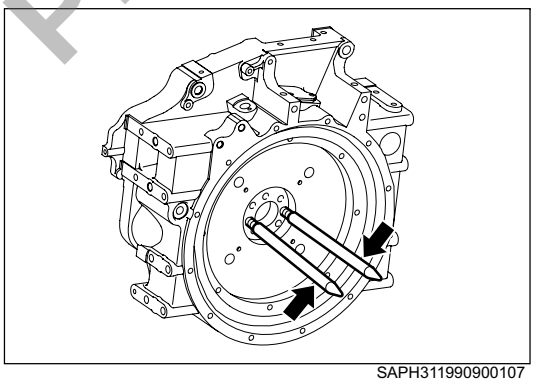

SAPH311990900107

(3) Install a special tool into the bolt hole of the crankshaft to remove the flywheel.

Special tool : 09481–1340 Guide

⚠ CAUTION

- **Since the flywheel is heavy, be careful for handling.**
- **Do not give impact to the special tool during work.**

PREVIEW - YOUFIXTHIS.COM

Download full manual at youfixthis.com

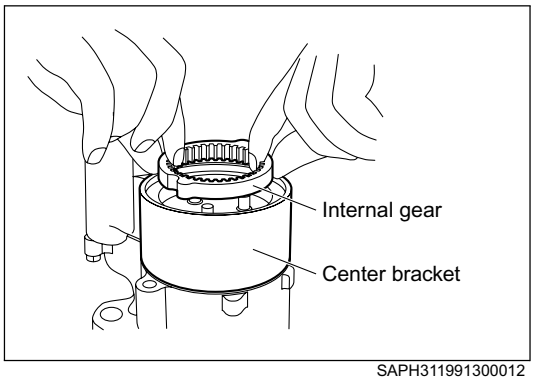

SAPH311991300012

10. Removal of internal gear

(1) Remove the internal gear from the center bracket.

⚠ **CAUTION** • **Make sure that the gear is not damaged or chipped.**

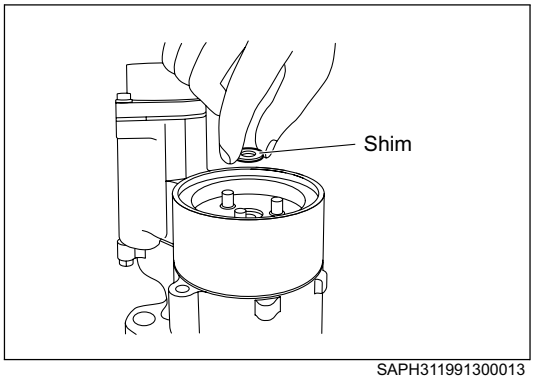

SAPH311991300013

11. Removal of shim washer

(1) Remove the shim washer from the center bracket.

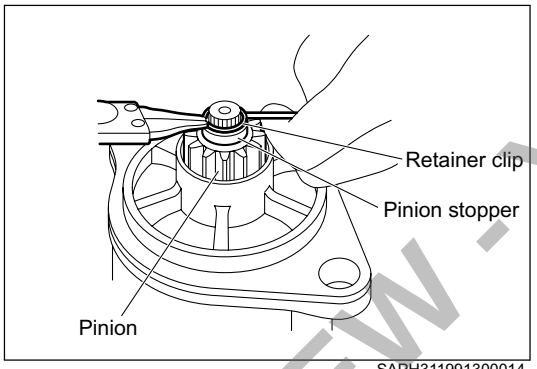

SAPH311991300014

12. Removal of pinion

(1) Remove the retainer clip using a tool such as snap ring pliers.

⚠ **CAUTION** • **Retainer clip must not be reused. Replace it with a new one.**

NOTICE • **Push upward or pull out the chipped part of the clip mouth.**

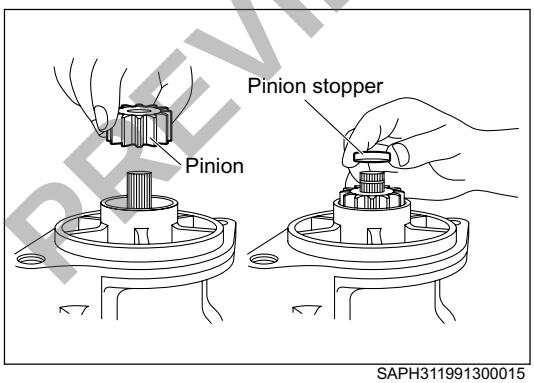

SAPH311991300015

(2) Remove the pinion stopper.

(3) Remove the pinion.

⚠ **CAUTION** • **Make sure that the gear is not damaged or chipped.**

PREVIEW - YOUFIXTHIS.COM

Download full manual at youfixthis.com

Starter

JP31199160601003

Status	Cause	Action
Starter does not turn. Turning is low.	Faulty connection of starter key	Repair connecting area.
	Flat battery	Charge or replace.
	Disconnection, loosening or corrosion of battery terminal	After cleaning, tighten.
	Grounding wire is disconnected.	Be sure to connect it.
	Use of incorrect engine oil	Replace with correct oil.
	Faulty contact of start magnet switch assembly.	Replace start magnet switch assembly
	Faulty contact or failure of starter relay	Replace starter relay.
	Wear of starter brush	Replace brush
	Seizure of commutator	Repair commutator.
	Wear of commutator	Undercut
	Shorting of armature	Replace armature assembly
	Insufficient tension of brush spring	Replace brush spring.
	Faulty operation of clutch	Clean or replace.

PREVIEW - YOUFIXTHIS.COM

Download full manual at youfixthis.com

PREVIEW ONLY

You're viewing 25 of 1114 pages

The full manual includes:

- All 1114 pages, complete
- Searchable PDF (find any keyword)
- No watermarks
- Instant download
- Print-ready quality

GET FULL MANUAL NOW

New Holland E215BJ, E215BJLC Shop Manual



Scan or click anywhere
youfixthis.com

Click anywhere on this page to get the full manual