NEW HOLLAND

E265B J

NEW HOLLAND KOBELCO

Hino Engine

Workshop Manual

PREVIEW - YOUFIXTHIS.COM

NEW HOLLAND CONSTRUCTION

BUILT AROUND YOU

Download full manual at youfixthis.com

2. SPECIFICATIONS

TABLE OF CONTENTS

2.1 NAME OF COMPONENTS 2-3
2.2 GENERAL DIMENSIONS 2-4
2.2.1 E265BJ/E265BJLC
[6.02m (19ft-9in) Boom+2.98m (9ft-9in) Standard Arm+1.0m³ (1.3cu•yd) Bucket Shoe] 2-4
2.2.2 E265BJ/E265BJLC
[6.02m (19ft-9in)+2.5m (8ft-2in) Short Arm+1.2m³ (1.57cu•yd) Bucket Shoe] 2-4
2.2.3 E265BJ/E265BJLC
[6.02m (19ft-9in) Boom+3.66m (12ft-0in) Long Arm+0.81m³ (1.06cu•yd) Bucket Shoe] 2-5
2.3 WEIGHT OF COMPONENTS 2-6
2.4 TRANSPOTATION 2-8
2.4.1 OVERALL DIMENSIONS OF MACHINE ON A TRAILER 2-8
2.4.2 DIMENSIONS OF ATTACHMENT 2-9
2.5 SPECIFICATIONS AND PERFORMANCE 2-11
2.5.1 SPEED AND CLIMBING CAPABILITY 2-11
2.5.2 ENGINE 2-11
2.5.3 HYDRAULIC COMPONENTS 2-11
2.5.4 WEIGHT 2-11
2.6 TYPE OF CRAWLER 2-12
2.7 TYPE OF BUCKET 2-12
2.8 COMBINATIONS OF ATTACHMENT 2-13
2.9 ENGINE SPECIFICATIONS 2-14
2.9.1 SPECIFICATIONS 2-14
2.9.2 ENGINE CHARACTERISTIC CURVE (HINO J05E-TB) 2-15

PREVIEW - YOUFIXTHIS.COM

Download full manual at youfixthis.com

11.11 UPPER FRAME LIFTING JIG

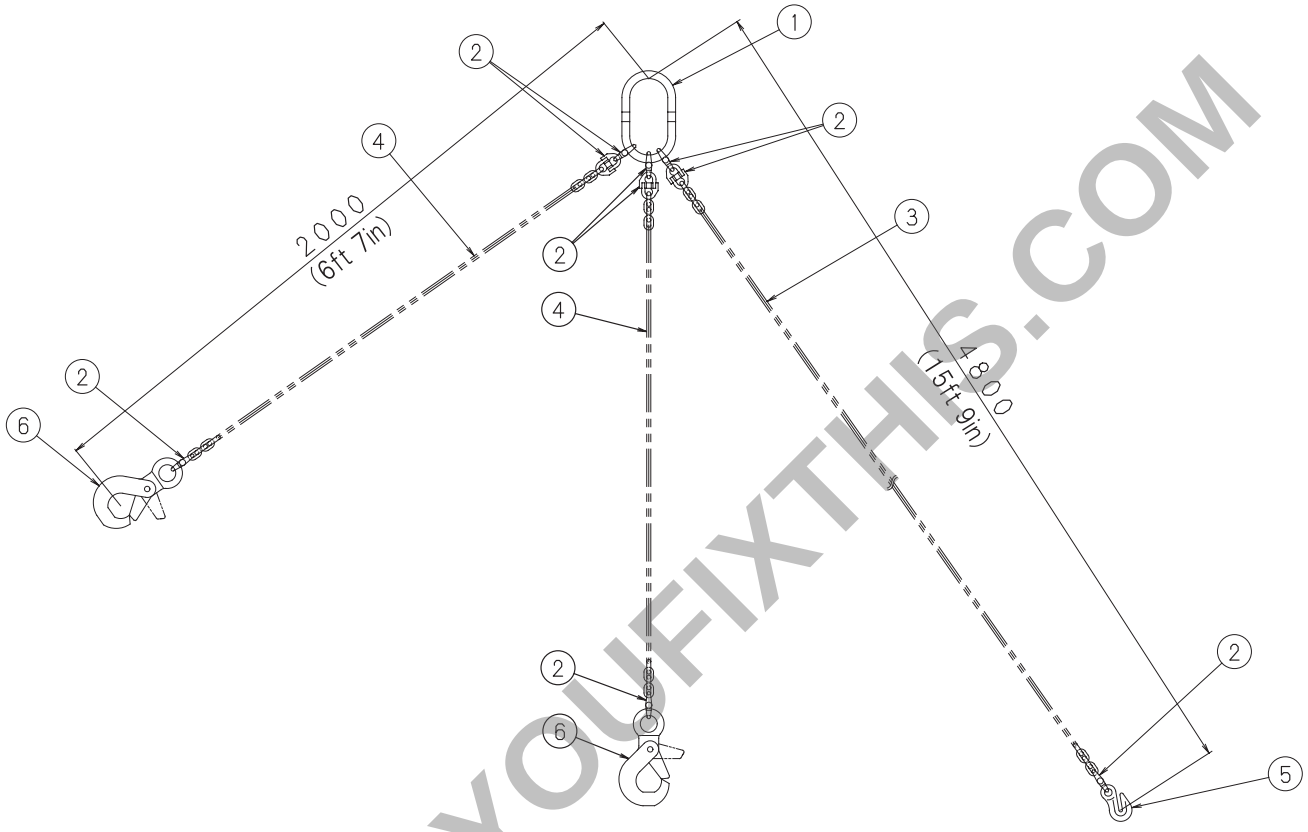

No.	N A M E	Q'TY	TYPE
1	MASTER LINK L	1	KITO HL050
2	HIGH COUPLING HC	9	KITO HC020
3	CHAIN	1	ϕ8×4.4m(14' 5")
4	CHAIN	2	ϕ8×1.5m(4' 11")
5	GRAB HOOK H	1	KITO HH020
6	HOOK	2	KITO HJ050

Fig. 11-4 Upper frame lifting jig

PREVIEW - YOUFIXTHIS.COM

Download full manual at youfixthis.com

PREFACE

(1) Working Conditions

1) Workers :
More than one worker shall be 1st class service technician (having five years or more of field experience and having received training in the operation).

2) Equipment :
Jigs, tools, apparatuses and testers used in field service work shall be available commercially. The maintenance plant shall be equipped with a service shop, a crane and inspection apparatuses necessary for specific self inspection activities.

3) Place :
A flat land where work may be performed and to which a service car or a truck crane is accessible.

(2) Range of standard maintenance time

1) Standard maintenance time=Direct maintenance time×Preparation time

2) Direct maintenance time : Net time actually spent for maintenance

3) Spare time :
Time needed to move machines for service, prepare safety operations, discuss work, and process the needs of the body.

(3) Extra time (not included in the standard service time)

1) Repair time :
Machining, sheet metal, welding, melt cutting, folding and extracting bolts, servicing parts, and painting.

2) Items excluded from service time because of uncertainty in time :
Receiving a vehicle into shop, transfer, delivery, inspection on completion, investigation of causes of faults, diagnosis, and inspection.

3) Indirect time :
Time for ; field work, preparation of necessary parts before leaving for work, return for field work, waiting time because of user's convenience in the field, paper work after returning to shop, and preparation of bills.

4) Special time : Work at early morning, at midnight and on holidays are to be calculated separately.

5) Separate calculation : The operating time for service cars, trucks with a crane and crane trucks.

(4) Applicable machine for estimation of standard maintenance time

1) Standard machine

2) A well maintained and controlled machine with a standard combination of attachments which is used in a general environment.

PREVIEW - YOUFIXTHIS.COM

Download full manual at youfixthis.com

(2) Pilot relief valve
The pilot relief valve PR1 is located on the gear pump that is attached to the main pump.

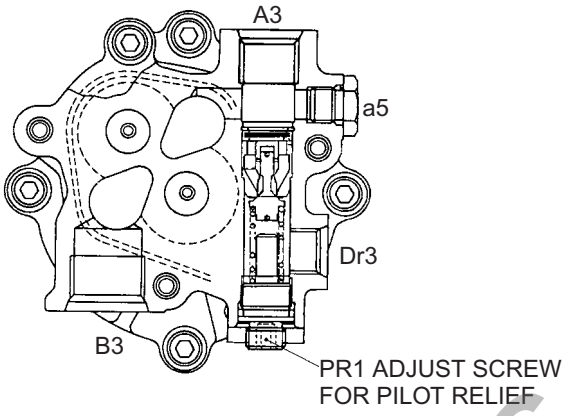

Fig. 13-5 Pilot relief valve position

(3) Swing over load relief
The swing motor is equipped with plugs PA,PB for pressure measurement, but the measurement is carried out using gauge ports **(a1)** and **(a2)**. (See Fig. 13-3)

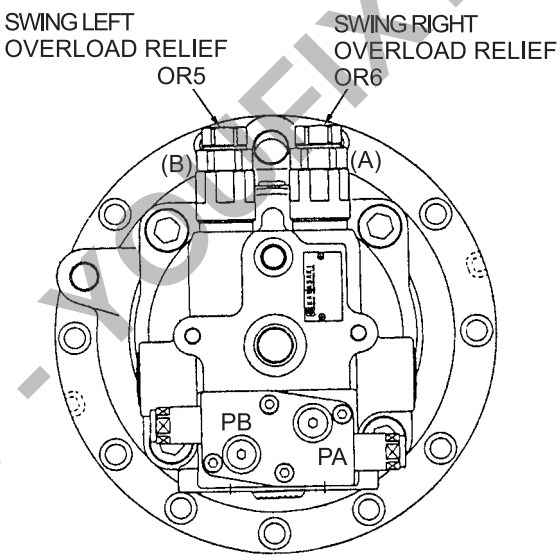

Fig. 13-6 Swing over load relief position

PREVIEW - YOUFIXTHIS.COM

Download full manual at youfixthis.com

21.1 SUMMARY OF MECHATRO CONTROL SYSTEM

21.1.1 MECHATRO CONTROL SYSTEM IN GENERAL

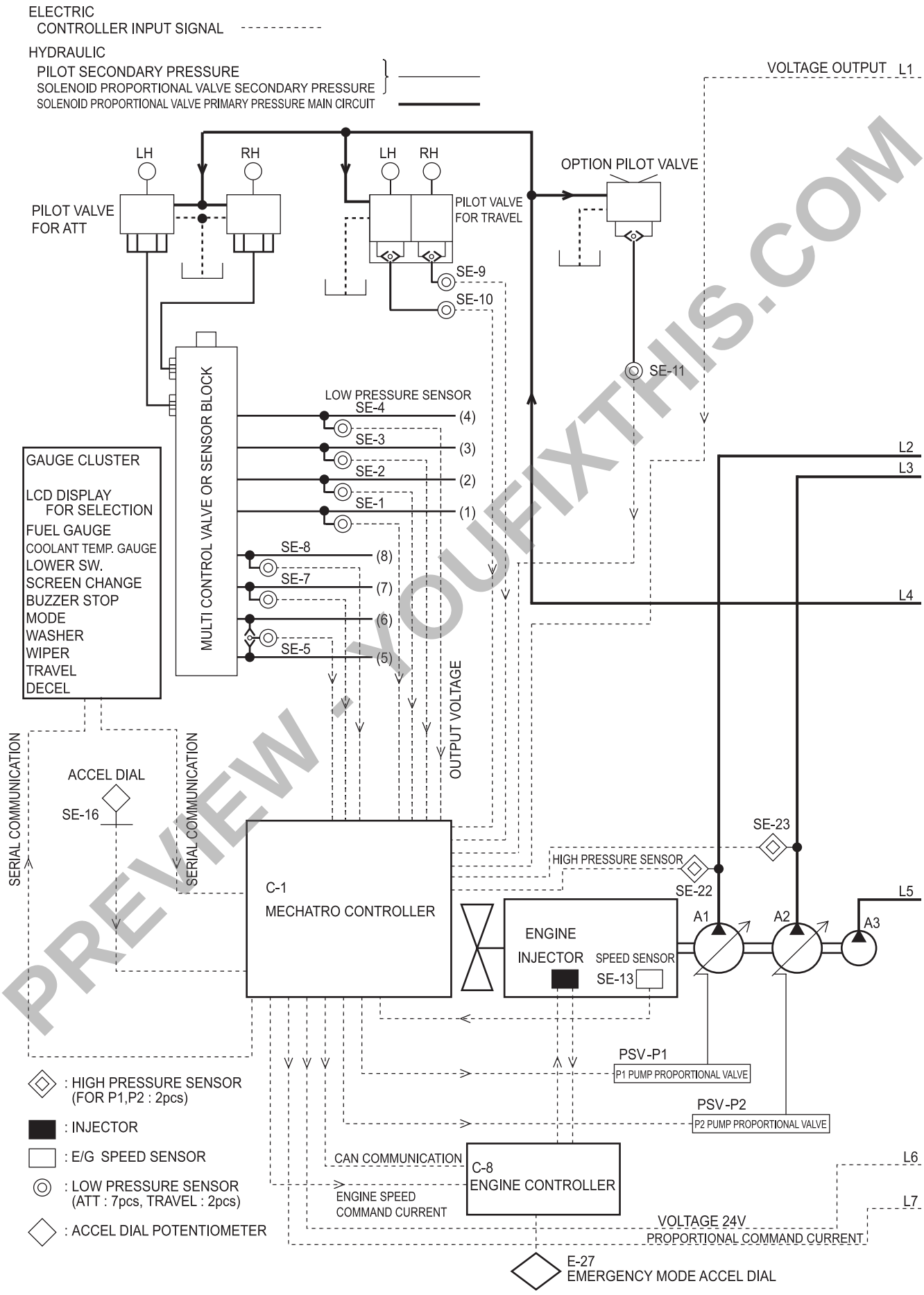

PREVIEW - YOUFIXTHIS.COM

Download full manual at youfixthis.com

22.2.1 STANDARD

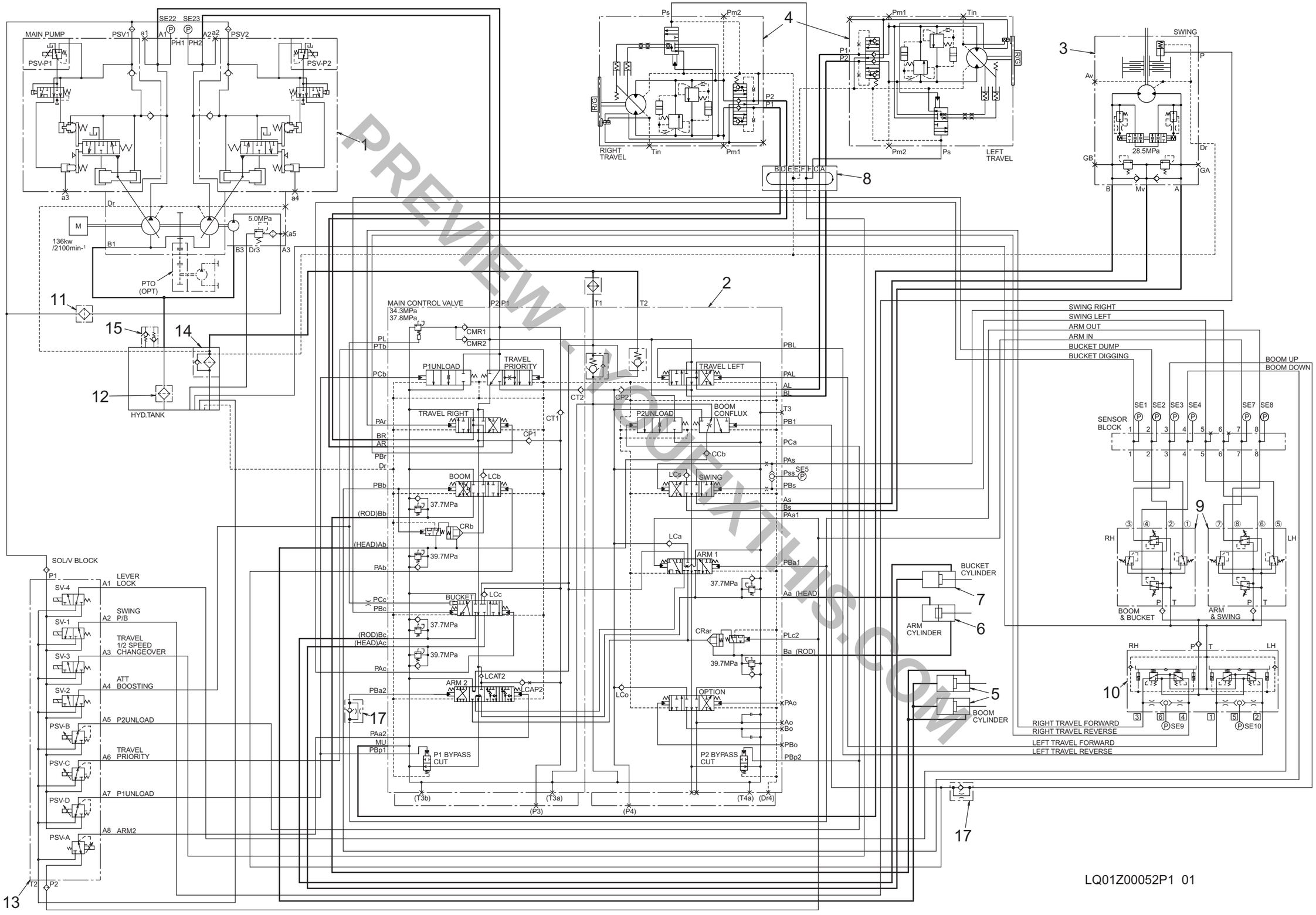

PREVIEW - YOUFIXTHIS.COM

Download full manual at youfixthis.com

23.1 ELECTRIC CIRCUIT DIAGRAM

APPLICABLE MACHINE No. YN11-45001- YQ11-06001- LC10-07001- YC10-03501- LQ12-06001- LL12-05001-

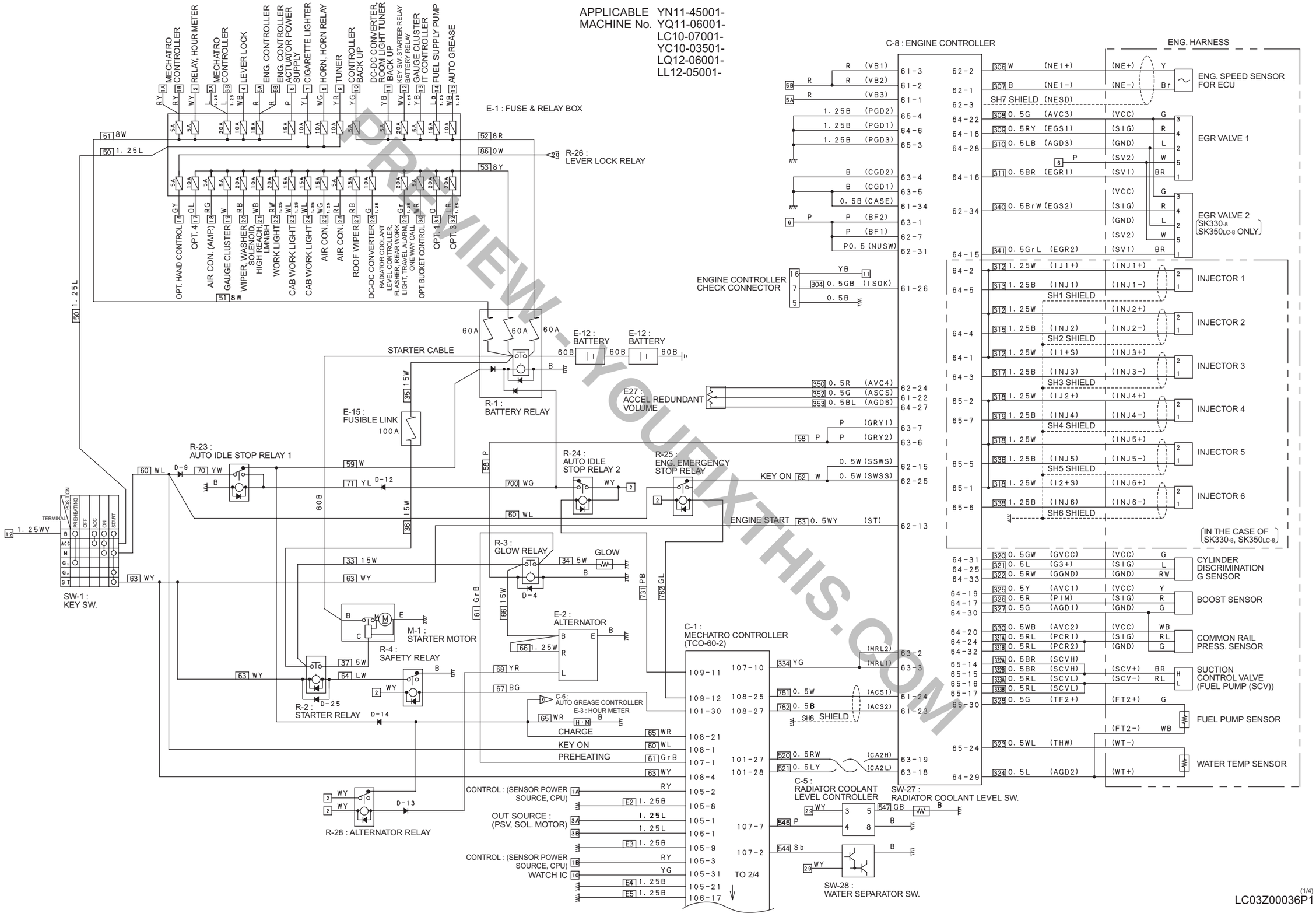

PREVIEW - YOUFIXTHIS.COM

Download full manual at youfixthis.com

24.1.2.2 CONSTRUCTION AND OPERATION

24.1.2.2.1 CONSTRUCTION

(1) Control valve

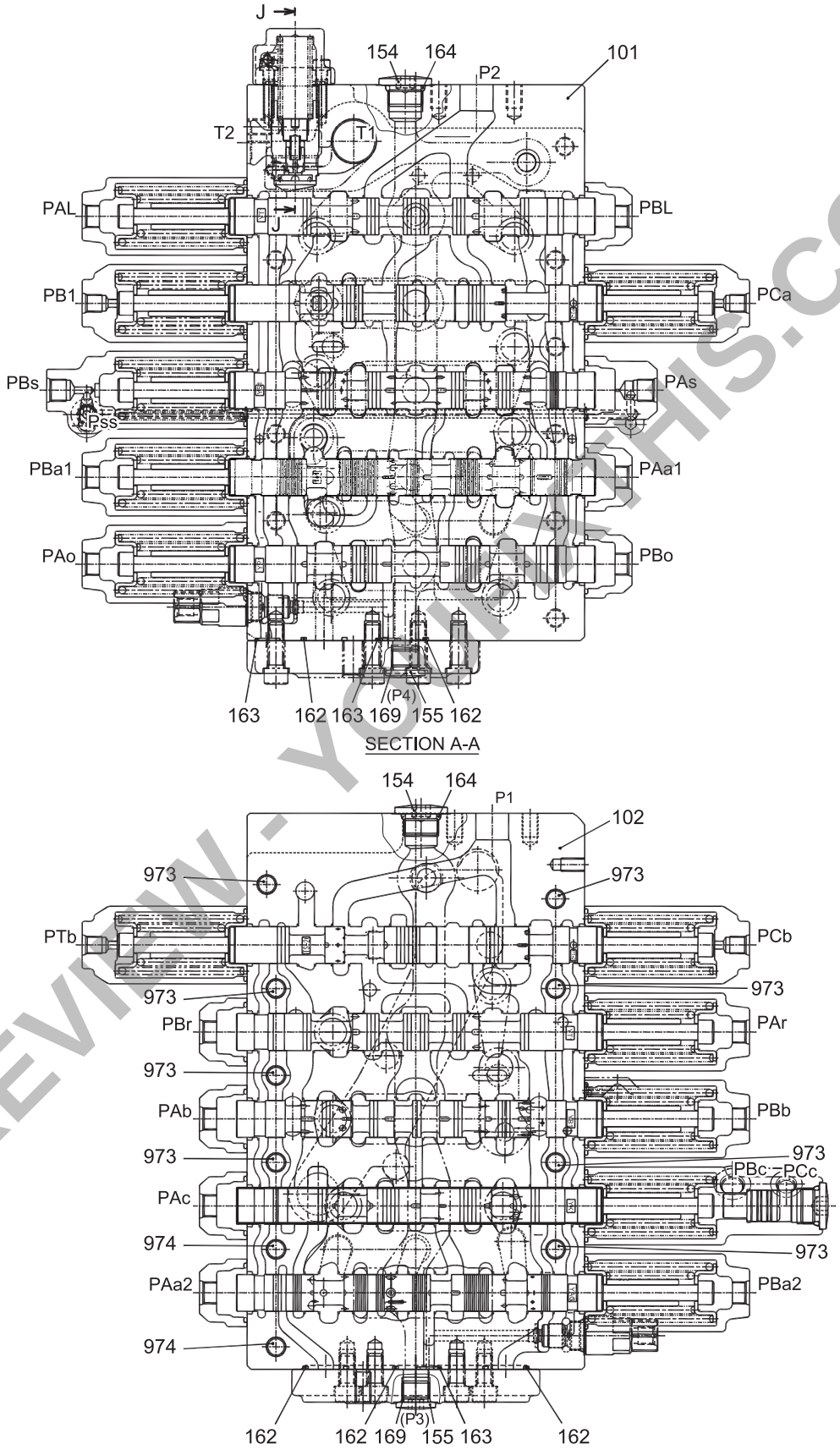

Fig. 24-23 Section (1/6)

PREVIEW - YOUFIXTHIS.COM

Download full manual at youfixthis.com

25.3.2 AIR DRYER ASSY

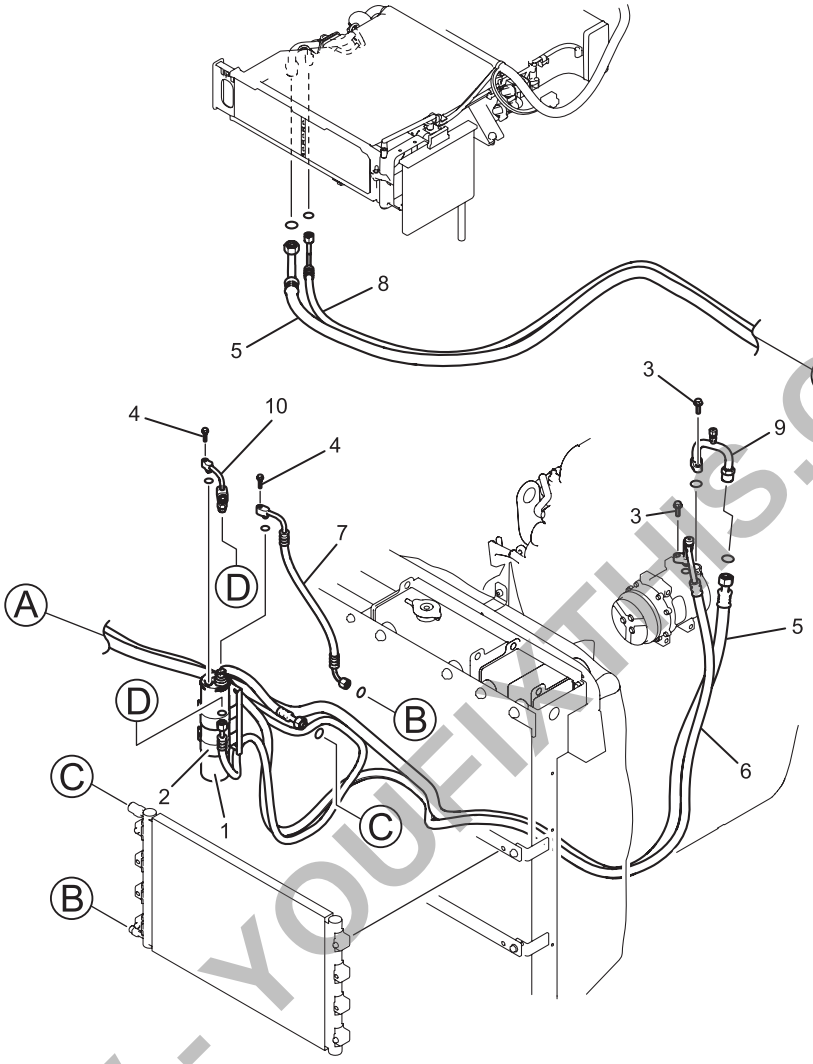

Fig. 25-6

Air dryer assy		LQ96V00021F1	(02)				
Tightening torque N•m (lbf•ft)	No.	Parts	Q'ty	Tightening torque N•m (lbf•ft)	No.	Parts	Q'ty
	1	Receiver dryer	1		6	D hose	1
	2	Bracket	1		7	L hose	1
	3	Capscrew	2		8	L hose	1
	4	Capscrew	2		9	S tube	1
	5	S hose	1		10	L tube	1

PREVIEW - YOUFIXTHIS.COM

Download full manual at youfixthis.com

Issue	Date of Issue	Applicable Machines	Remarks
NHK Edition	February, 2007	E235BSR : YF05-02001~ E235BSR(N)LC : YU05-02001~	(NHK)
↑	March, 2007	E215BJ : YN11-45001~ E215BJLC : YQ11-06001~	(NHK Russia)
↑	June, 2007	E225BSR : YB05-03001~ E225BSRLC : LA05-02001~	(NHK)
↑	July, 2007	E135BSR : YY05-12001~ E135BSRLC : YH05-07001~	(NHK)
↑	↑	E215BJ : YN11-45001~ E215BJLC : YQ11-06001~	(NHK Middle East)
↑	↑	E265BJ : LQ12-06001~ E265BJLC : LL12-05001~	(NHK Russia)
↑	↑	E215BJ : YN11-45001~ E215BJLC : YQ11-06001~	(NHK Russia) HS Engine
↑	↑	↑	(NHK Middle East) HS Engine
↑	August, 2007	E385BJ : LC10-07001~ E385BJLC : YC10-03501~	(NHK Middle East)
↑	September, 2007	E265BJ : LQ12-06001~ E265BJLC : LL12-05001~	NHK Russia (HS Engine)
↑	September, 2008	↑	(NHK Turkey)

PREVIEW - YOUFIXTHIS.COM

Download full manual at youfixthis.com

3) Attaching tools for retainer
Put retainer on the press bench directing the wiper ring fitting section of rod cover upward, then put retainer tool (D) on the rod cover.

- Fit retainer tool as shown in the right figure directing large diameter section (flange section) upward.
- Clean the surface of press bench, and take care for the tool bottom face not to be damaged by foreign matter like dust, chip, etc.

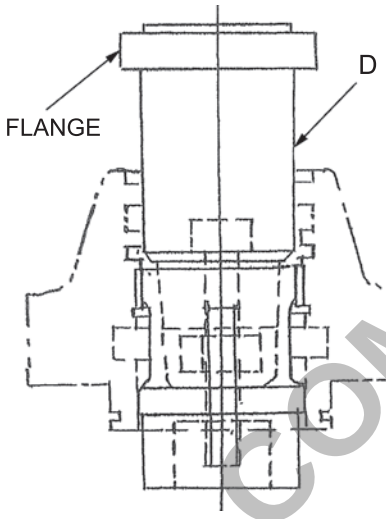

4) Cutting into of the edge of chuck
Press the upper section of retainer tool gradually so that the edge of chuck tool (A) cuts into the bushing surface.
Set the pressing force to 2~3 tons (4410~6615 lbs).

After completion of pressing, tighten adjuster bolt again by hand.

- Press it with retainer tool (D).

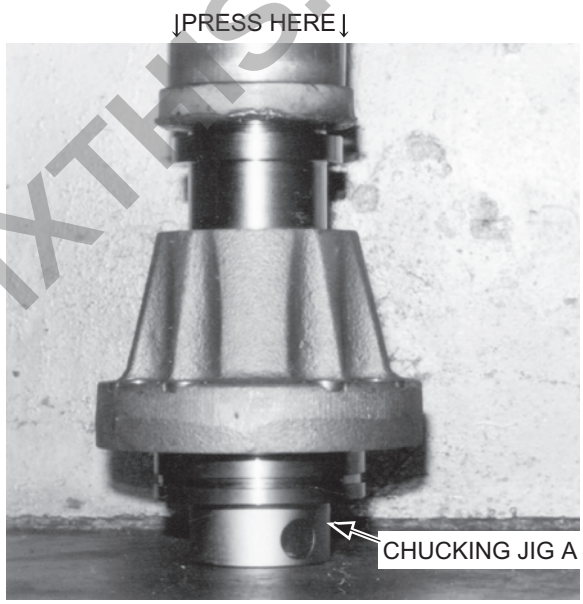

PREVIEW - YOUFIXTHIS.COM

Download full manual at youfixthis.com

(19)Remove cover assy (1)

1) Unlock the locks and open cover (1-2).

2) Remove 4 sems bolts (43) M12×25.

3) Remove cover assy (1).

: 19 mm

Weight : 30kg (66 lbs)

(20)Remove other brackets, as required.

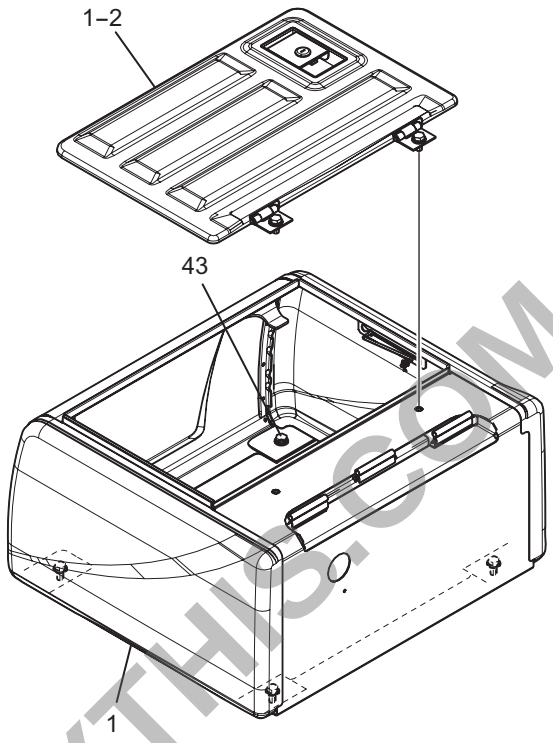

Fig. 33-26 Remove cover assy (1)

33.1.4.3 INSTALLATION

(1) Installing is done in the reverse order of removing.

(2) Tightening torque

Unit : N·m (lbf·ft)

SIZE	NUT	SEMS BOLT
M8	–	23.0 (17.0)
M10	46.5 (34.3)	46.5 (34.3)
M12	–	80.0 (59.0)

PREVIEW - YOUFIXTHIS.COM

Download full manual at youfixthis.com

34. TRAVEL SYSTEM

TABLE OF CONTENTS

34.1 REMOVING AND INSTALLING 34-3
34.1.1 TRAVEL SYSTEM 34-3
34.1.2 CRAWLER 34-3
34.1.3 UPPER ROLLER 34-7
34.1.4 LOWER ROLLER 34-13
34.1.5 FRONT IDLER (IDLER ADJUSTER ASSY) 34-21
34.1.6 SPROCKET 34-30
34.1.7 TRAVEL MOTOR 34-33
34.1.8 SWING BEARING 34-35
34.2 REMOVAL AND INSTALLATION OF TRAVEL MOTOR UNIT 34-38
34.2.1 CONSTRUCTION OF TRAVEL MOTOR 34-38

PREVIEW - YOUFIXTHIS.COM

Download full manual at youfixthis.com

Issue	Date of Issue	Applicable Machines	Remarks
NHK Edition	March, 2007	E215BJ : YN11-45001~ E215BJLC : YQ11-06001~	(NHK Russia)
↑	July, 2007	E215BJ : YN11-45001~ E215BJLC : YQ11-06001~	(NHK Middle East)
↑	↑	E265BJ : LQ12-06001~ E265BJLC : LL12-05001~	(NHK Russia)
↑	↑	E215BJ : YN11-45001~ E215BJLC : YQ11-06001~	(NHK Russia) HS Engine
↑	↑	↑	(NHK Middle East) HS Engine
↑	September, 2007	E265BJ : LQ12-06001~ E265BJLC : LL12-05001~	NHK Russia (HS Engine)
↑	September, 2008	↑	(NHK Turkey)

PREVIEW - YOUFIXTHIS.COM

Download full manual at youfixthis.com

Issue	Date of Issue	Applicable Machines	Remarks
NHK Edition	February, 2007	E235BSR : YF05-02001~ E235BSR(N)LC : YU05-02001~	(NHK)
↑	March, 2007	E215BJ : YN11-45001~ E215BJLC : YQ11-06001~	(NHK Russia)
↑	June, 2007	E225BSR : YB05-03001~ E225BSRLC : LA05-02001~	(NHK)
↑	July, 2007	E135BSR : YY05-12001~ E135BSRLC : YH05-07001~	(NHK)
↑	↑	E215BJ : YN11-45001~ E215BJLC : YQ11-06001~	(NHK Middle East)
↑	↑	E265BJ : LQ12-06001~ E265BJLC : LL12-05001~	(NHK Russia)
↑	↑	E215BJ : YN11-45001~ E215BJLC : YQ11-06001~	(NHK Russia) HS Engine
↑	↑	↑	(NHK Middle East) HS Engine
↑	September, 2007	E265BJ : LQ12-06001~ E265BJLC : LL12-05001~	NHK Russia (HS Engine)
↑	September, 2007	E265BJ : LQ12-06001~ E265BJLC : LL12-05001~	NHK Russia (HS Engine)
↑	September, 2008	↑	(NHK Turkey)

PREVIEW - YOUFIXTHIS.COM

Download full manual at youfixthis.com

Issue	Date of Issue	Applicable Machines	Remarks
NHK Edition	February, 2007	E235BSR : YF05-02001~ E235BSR(N)LC : YU05-02001~	(NHK)
↑	March, 2007	E215BJ : YN11-45001~ E215BJLC : YQ11-06001~	(NHK Russia)
↑	June, 2007	E225BSR : YB05-03001~ E225BSRLC : LA05-02001~	(NHK)
↑	July, 2007	E135BSR : YY05-12001~ E135BSRLC : YH05-07001~	(NHK)
↑	↑	E215BJ : YN11-45001~ E215BJLC : YQ11-06001~	(NHK Middle East)
↑	↑	E265BJ : LQ12-06001~ E265BJLC : LL12-05001~	(NHK Russia)
↑	↑	E215BJ : YN11-45001~ E215BJLC : YQ11-06001~	(NHK Russia) HS Engine
↑	↑	↑	(NHK Middle East) HS Engine
↑	August, 2007	E385BJ : LC10-07001~ E385BJLC : YC10-03501~	(NHK Middle East)
↑	September, 2007	E265BJ : LQ12-06001~ E265BJLC : LL12-05001~	NHK Russia (HS Engine)
↑	September, 2008	↑	(NHK Turkey)

PREVIEW - YOUFIXTHIS.COM

Download full manual at youfixthis.com

(2) Terminal No.

For the signal check harness connector, the ECU terminal number in the text is treated as follows :

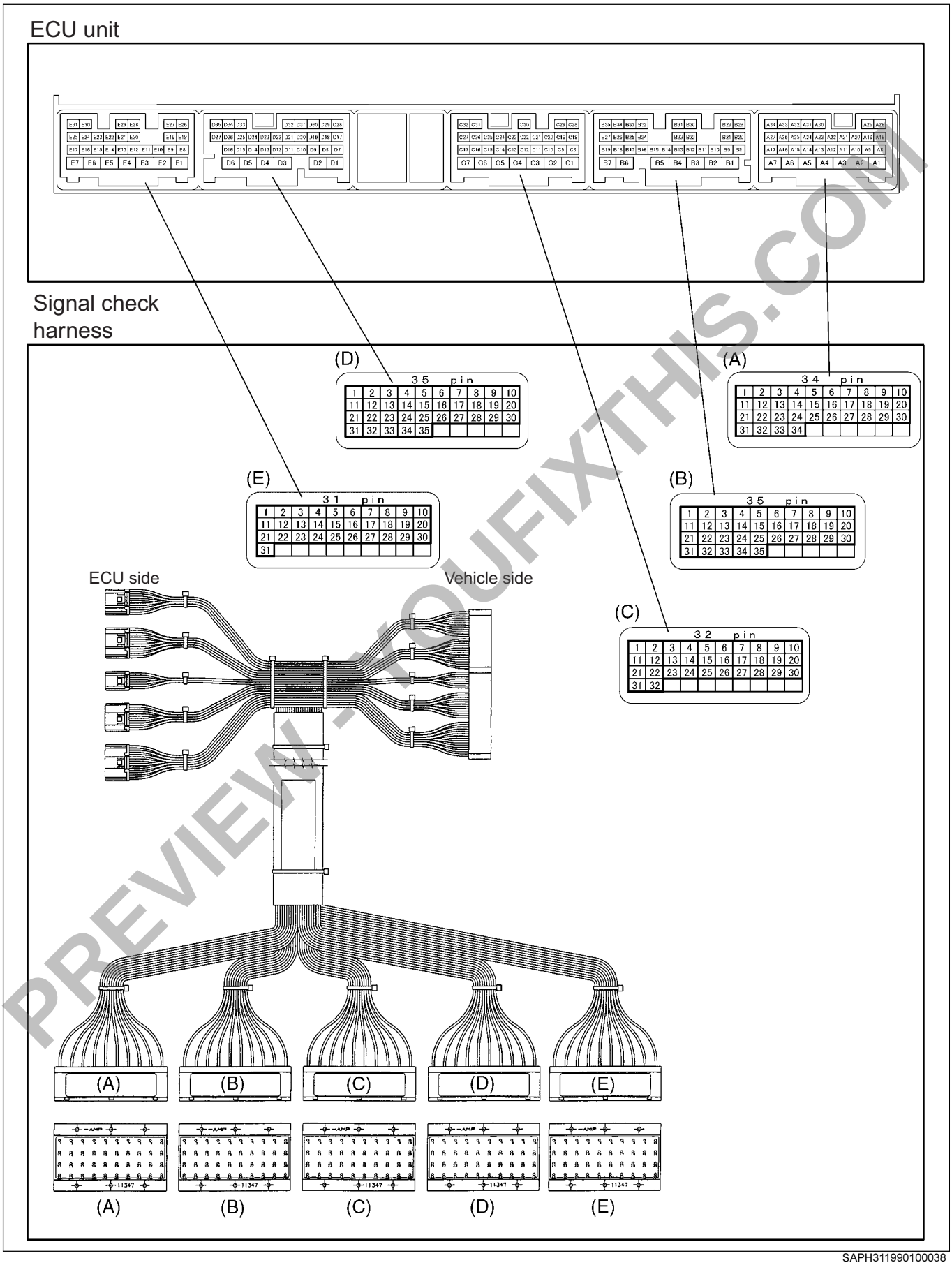

SAPH311990100038

PREVIEW - YOUFIXTHIS.COM

Download full manual at youfixthis.com

3 PARTS TO BE PREPARED

Engine Body 3-2
Special tool 3-2
Fuel System 3-2
Lubricant, etc. 3-2
Electrical 3-2
Special tool 3-2
Engine Mechanical 3-3
Special tool 3-3
Instruments 3-6
Lubricant, etc. 3-6
Lubrication 3-6
Special tool 3-6
Lubricant, etc. 3-6
Starting and Charging 3-7
Jig (reference dimensional drawing for manufacture) 3-7
Instruments 3-8
Lubricant, etc. 3-8
Turbocharger 3-9
Special tool 3-9
Engine Failure Diagnosis 3-10
Special tool 3-10

PREVIEW - YOUFIXTHIS.COM

Download full manual at youfixthis.com

Cylinder Block

Part layout

JP31199090402002

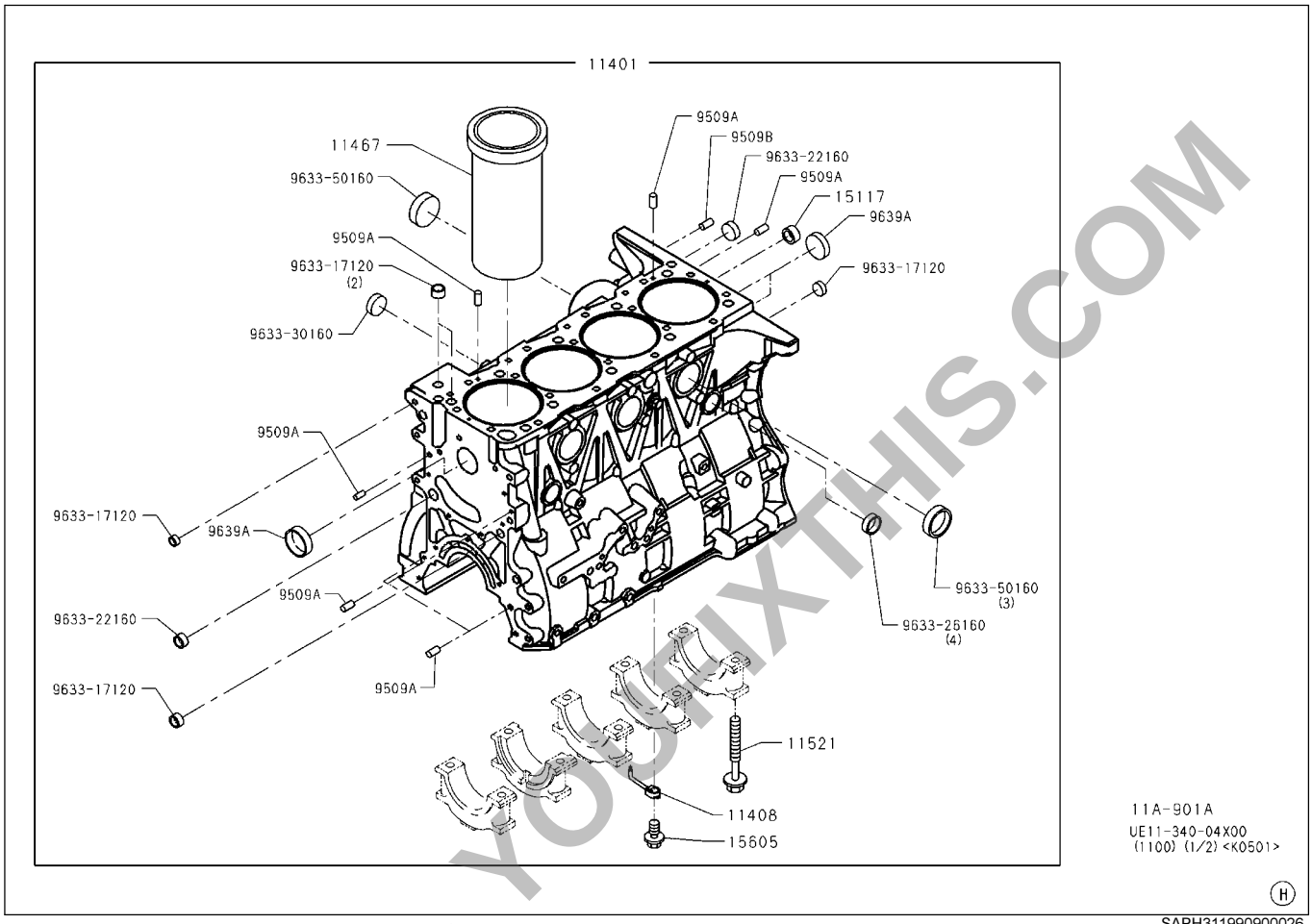

SAPH311990900026

11401	Cylinder block assembly	11467	Cylinder liner
11408	Cooling jet		

Tightening torque

11521	69N·m{700kgf·cm, 51lbf·ft}+90°+45°	15605	22N ·m{220kgf·cm, 16lbf·ft}

PREVIEW - YOUFIXTHIS.COM

Download full manual at youfixthis.com

FAILURE DIAGNOSIS FOR EACH ENGINE STATUS

Engine mechanical

JP31199160601001

Status	Cause	Action
Engine overheat (coolant)	Insufficient coolant	Replenish coolant
	Faulty thermostat	Replace thermostat
	Water leak from cooling system	Correction
	Faulty coolant pump	Repair or replace
	Faulty head gasket	Replace head gasket
Engine overheat (radiator)	Clogging of radiator	Cleaning of radiator
	Corrosion of cooling system	Clean and repair cooling system
	Clogging of radiator core front part	Clean radiator
	Faulty radiator cap	Replace radiator cap
Engine overheat (compression pressure)	Non-synchronous injection timing	Injection timing inspection
	Faulty fuel injection pressure	Injection pressure inspection
	Faulty fuel	Replace with correct fuel
	Faulty injector	Replace injector
Engine overheat (lubrication unit)	Deterioration of engine oil	Replace engine oil
	Faulty oil pump	Replace oil pump
	Insufficient engine oil	Replenish engine oil
Large engine oil consumption (piston, cylinder liner and piston ring)	Wear of piston ring and cylinder liner	Replace piston ring and cylinder liner
	Damage to piston ring	Replace piston ring and cylinder liner
	Faulty fixing of piston ring	Replace piston ring and cylinder liner
	Faulty assembly of piston ring	Replace piston ring and cylinder liner
	Faulty engine oil	Replace engine oil
	Faulty piston ring joint	Reassemble piston ring
Large engine oil consumption (valve and valve guide)	Wear of valve stem	Replace valve and valve guide
	Wear of valve guide	Replace valve guide
	Faulty assembly of valve stem seal	Replace stem seal
	Excessive oil lubrication to rocker arm	Inspection of clearance between rocker arm and rocker arm shaft
Large engine oil consumption (others)	Faulty oil level gauge	Replace with correct level gauge
	Excessive filling of engine oil	Fill with appropriate amount of oil.
	Leak of engine oil	Repair or replace the part of oil leak.
Piston seizure (in operation)	Sudden stop of engine	Perform warm-up before stop of engine
Piston seizure (lubrication unit)	Insufficient engine oil	Replenish engine oil
	Deterioration of engine oil	Replace engine oil
	Incorrect engine oil	Replace with correct engine oil.
	Low oil pressure	Inspection of lubrication unit
	Faulty oil pump	Replace oil pump

PREVIEW - YOUFIXTHIS.COM

Download full manual at youfixthis.com

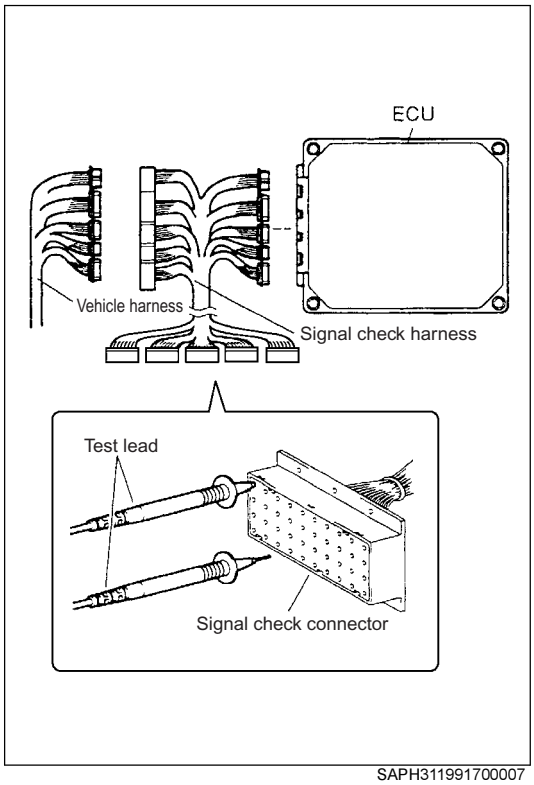

SAPH311991700007

2. Connection of signal check harness

(1) Set the starter key to "OFF" and disconnect the connector from the engine ECU.

(2) Connect the signal check harness to the the engine ECU and the machine harness.

Special tool : Signal check harness (09049-1080)

PREVIEW - YOUFIXTHIS.COM

Download full manual at youfixthis.com

SAFETY PRECAUTIONS

WARNING

The proper and safe lubrication and maintenance for this machine, recommended by Manufacturer, are outlined in the OPERATOR'S MANUAL for the machine.
Improper performance of lubrication or maintenance procedures are dangerous and could result in injury or death. Read and understand the MANUAL before performing any lubrication or maintenance.

The serviceman or mechanic may be unfamiliar with many of the systems on this machine. This makes it important to use caution when performing service work. A knowledge of the system and or components is important before the removal or disassembly of any component.

Because of the size of some of the machine components, the serviceman or mechanic should check the weights noted in this manual. Use proper lifting procedures when removing any components. Weight of components table is shown in the section ; SPECIFICATIONS.

The following is a list of basic precautions that must always be observed.

(1) Read and understand all Warning plates and decal on the machine before Operating, Maintaining or Repairing this machine.

(2) Always wear protective glasses and protective shoes when working around machines. In particular, wear protective glasses when using hammers, punches or drifts on any part of the machine or attachments. Use welders gloves, hood/goggles, apron and the protective clothing appropriate to the welding job being performed. Do not wear loose fitting or torn clothing. Remove all rings from fingers, loose jewelry, confine long hair and loose clothing before working on this machinery.

(3) Disconnect the battery and hang a "Do Not Operate" tag in the Operators Compartment. Remove ignition keys.

(4) If possible, make all repairs with the machine parked on a firm level surface. Block the machine so it does not roll while working on or under the machine. Hang a "Do Not Operate" tag in the Operators Compartment.

(5) Do not work on any machine that is supported only by lift, jacks or a hoist. Always use blocks or jack stands, capable of supporting the machine, before performing any disassembly.

WARNING

Do not operate this machine unless you have read and understand the instructions in the OPERATOR'S MANUAL. Improper machine operation is dangerous and could result in injury or death.

(6) Relieve all pressure in air, oil or water systems before any lines, fittings or related items are disconnected or removed. Always make sure all raised components are blocked correctly and be alert for possible pressure when disconnecting any device from a system that utilizes pressure.

(7) Lower the bucket, dozer, or other attachments to the ground before performing any work on the machine. If this cannot be done, make sure the bucket, dozer, ripper or other attachment is blocked correctly to prevent it from dropping unexpectedly.

(8) Use steps and grab handles when mounting or dismounting a machine. Clean any mud or debris from steps, walkways or work platforms before using. Always face to the machine when using steps, ladders and walkways. When it is not possible to use the designed access system, provide ladders, scaffolds, or work platforms to perform safe repair operations.

(9) To avoid back injury, use a hoist when lifting components which weigh 20kg (45lbs) or more. Make sure all chains, hooks, slings, etc., are in good condition and are the correct capacity. Be sure hooks are positioned correctly. Lifting eyes are not to be side loaded during a lifting operation.

(10) To avoid burns, be alert for hot parts on machines which have just been stopped and hot fluids in lines, tubes and compartments.

(11) Be careful when removing cover plates. Gradually back off the last two capscrews or nuts located at opposite ends of the cover or device and carefully pry cover loose to relieve any spring or other pressure, before removing the last two capscrews or nuts completely.

(12) Be careful when removing filler caps, breathers and plugs on the machine. Hold a rag over the cap or plug to prevent being sprayed or splashed by liquids under pressure. The danger is even greater if the machine has just been stopped because fluids can be hot.

PREVIEW - YOUFIXTHIS.COM

Download full manual at youfixthis.com

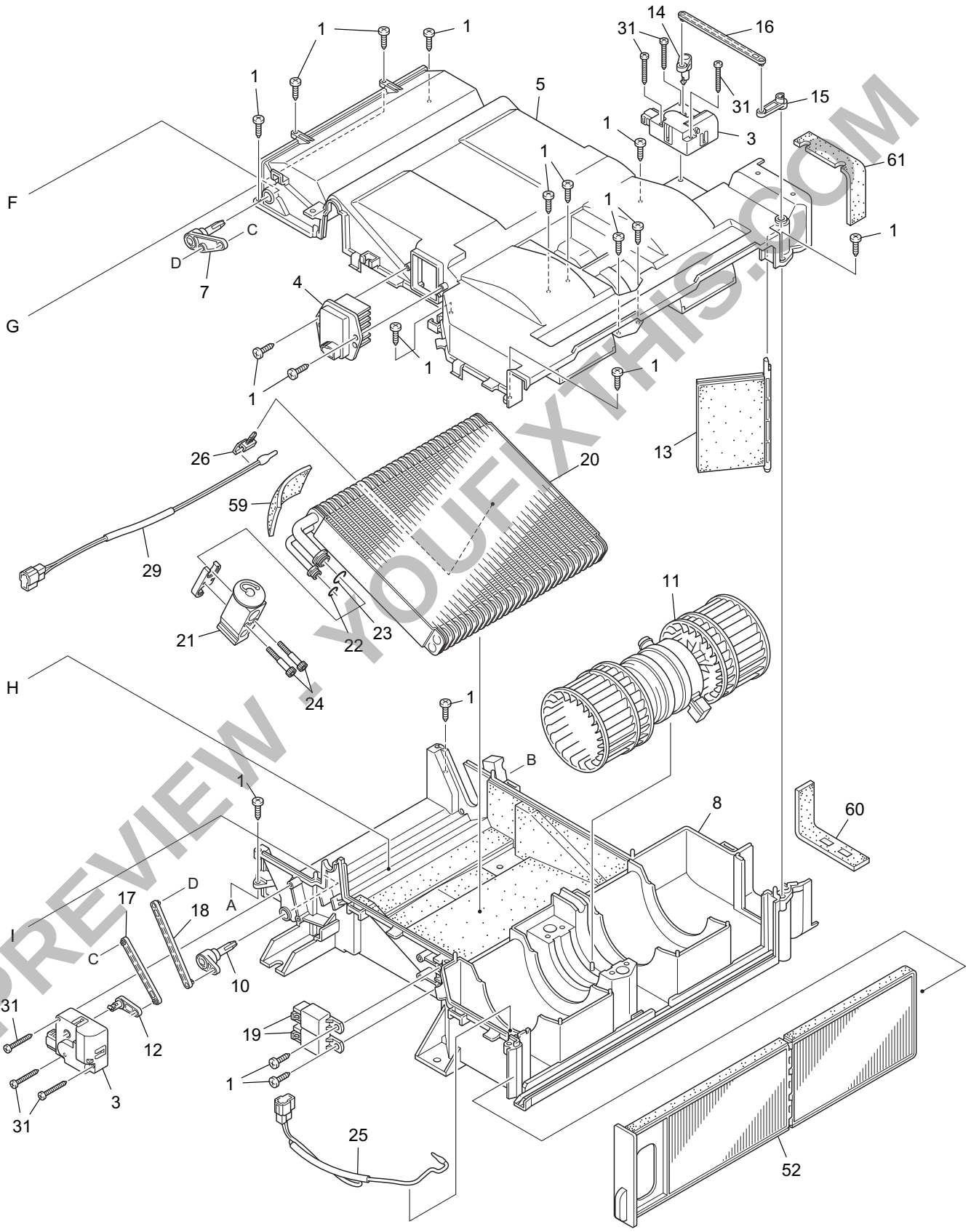

PREVIEW - YOUFIXTHIS.COM

Fig. 25-3 Air conditioner unit (2/2)

Download full manual at youfixthis.com

Table46-45

Error code	C013			
Trouble	P1 pump pressure sensor's wiring is disconnected.			
Judging condition	The input voltage from P1 pump pressure sensor is 0.1V or less.			
Symptom	The delicate operability of P1 pump related attachment becomes poor.			
Control in the event of failure	Set proportional valve output rate of P1 and P2 pumps to 0mA. (Hydraulic pump emergency mode)			
Returned in normal condition	It returns automatically in normal condition.			
Service diagnosis checking screen	Screen No.	7	C-1 PUMP P1	
	Screen No.			
	Screen No.			
Checking object			Checking contents and remedy	
1	• P1 pump pressure sensor SE-22		When C013 is cancelled and other error occurs by turning starter switch on after exchanging the connector with other sensor. Check sensor unit for possible failure. If failure found, replace it.	
2	• Wiring between P1 pump pressure sensor and controller CN-139F CN-103F		When C013 is displayed after turning the starter switch on after the connector is exchanged with other sensor. Check wiring for possible failure according to the wiring checking procedure and repair it if necessary.	
3	• Mechatro controller		Check that the error is corrected after replacement of controller.	

Table46-46

Error code	C014			
Trouble	P1 pump pressure sensor's power source is shortcut.			
Judging condition	The input voltage from P1 pump pressure sensor is 4.7V or more.			
Symptom	The delicate operability of P1 pump related attachment becomes poor.			
Control in the event of failure	Set proportional valve output rate of P1 and P2 pumps to 0mA. (Hydraulic pump emergency mode)			
Returned in normal condition	It returns automatically in normal condition.			
Service diagnosis checking screen	Screen No.	7	C-1 PUMP P1	
	Screen No.			
	Screen No.			
Checking object			Checking contents and remedy	
1	• P1 pump pressure sensor SE-22		When C014 is cancelled and other error occurs by turning starter switch on after exchanging the connector with other sensor. Check sensor unit for possible failure. If failure found, replace it.	
2	• Wiring between P1 pump pressure sensor and controller CN-139F CN-103F		When C014 is displayed after turning the starter switch on after the connector is exchanged with other sensor. Check wiring for possible failure according to the wiring checking procedure and repair it if necessary.	
3	• Mechatro controller		Check that the error is corrected after replacement of controller.	

PREVIEW - YOUFIXTHIS.COM

Download full manual at youfixthis.com

PREVIEW ONLY

You're viewing 25 of 1105 pages

The full manual includes:

- All 1105 pages, complete
- Searchable PDF (find any keyword)
- No watermarks
- Instant download
- Print-ready quality

GET FULL MANUAL NOW

New Holland E265BJ, E265BJLC Service Manual



Scan or click anywhere
youfixthis.com

Click anywhere on this page to get the full manual