TO THE OWNER:

The warranty coverage that is extended to your machine is explained in the Warranty and Limitation of Liability form. Your dealer will provide you with a copy of the warranty and retain a copy which you have signed. After you read the warranty, ask your dealer to explain any points that you may not understand.

The machine was designed to power and propel itself. It is intended to move material in the normal and customary applications.

Do not modify or alter or permit anyone else to modify or alter this machine or any of its components mechanical function with first consulting an authorized New Holland Construction dealer. If you have any questions regarding machine modifications, contact New Holland Construction, 245 E. North Ave., Carol Stream, IL 60188.

Your safety and the safety of those around you depend upon the care and good judgment you use while operating this equipment. Read the safety precautions carefully.

After you have operated the machine for 50 hours, take your machine and this manual to your selling dealer. He will perform the factory recommended 50-hour service. You will be responsible for the cost of lubricants, fluids, filters and other items replaced as part of normal maintenance. Prior to taking the machine to your selling dealer for service, it is recommended that you contact them to determine any other charges for which you may be responsible.

All data given in this book is subject to product variations. Dimensions and weights are approximate only and the illustrations do not necessarily show machines in standard condition. For exact information about any particular machine, please consult your New Holland Construction dealer.



CAUTION: THIS SYMBOL IS USED THROUGHOUT THIS BOOK WHENEVER PERSONAL SAFETY IS INVOLVED. TAKE TIME TO READ AND FOLLOW THE INSTRUCTIONS. BE CAREFUL!

CAUTION: PICTURES IN THIS MANUAL MAY SHOW PROTECTIVE SHIELDING OPEN OR REMOVED TO BETTER ILLUSTRATE A PARTICULAR FEATURE OR ADJUSTMENT.

BE CERTAIN, HOWEVER, TO CLOSE OR REPLACE ALL SHIELDING BEFORE OPERATING THE MACHINE.

IMPROVEMENTS

New Holland Construction is continually striving to improve its products. We reserve the right to make improvements or changes when it becomes practical and possible to do so, without incurring any obligation to make changes or additions to the equipment sold previously.

©1999 NEW HOLLAND CONSTRUCTION

PREVIEW - YOUFIXTHIS.COM

Download full manual at youfixthis.com

PROBLEM	POSSIBLE CAUSES	REMEDY
Engine knocks	1. Diluted or thin oil	1. Check crankshaft bearings for damage, change as required. Drain and refill with specified oil and renew filter. Ascertain cause of dilution
	2. Insufficient oil supply	2. Check oil level and top up as necessary. Overhaul or renew pump as necessary. Check oil filter is not clogged
	3. Low oil pressure	3. Overhaul pump or relief valve as necessary
	4. Excessive crankshaft end play	4. Install new thrust bearing liner
	5. Flywheel or ring gear run–out excessive	5. Skim flywheel or fit new ring gear
	6. Excessive connecting rod or main bearing clearance	6. Install new bearing inserts and/or re–grind crankshaft
	7. Bent or twisted connecting rods	7. Renew connecting rods
	8. Crankshaft journals out–of–round	8. Re–grind crankshaft and fit undersize bearing inserts
	9. Excessive piston–to–cylinder bore clearance	9. Re–bore/re–sleeve block and fit new pistons
	10. Excessive piston ring clearance	10. Fit new pistons and rings
	11. Broken rings	11. Fit new rings, check bore and pistons for damage
	12. Excessive piston pin clearance	12. Fit new piston or pin
	13. Piston pin retainer loose or missing	13. Install new retainer, and check bore/pistons for damage
	14. Excessive camshaft play	14. Install new thrust plate
	15. Imperfections on timing gear teeth	15. Renew timing gear
	16. Excessive timing gear backlash	16. Renew timing gear

PREVIEW - YOUFIXTHIS.COM

DESCRIPTION AND OPERATION
(OP NO 10 210)

The electric lift pump is installed on all models fitted with the DP203 fuel injection pump engines.

The pump (1) is mounted into the head of the fuel filter and is activated via the key–start switch.

The fuel is drawn up from the tank through he separator and filter assemblies and then out to the FIP inlet.

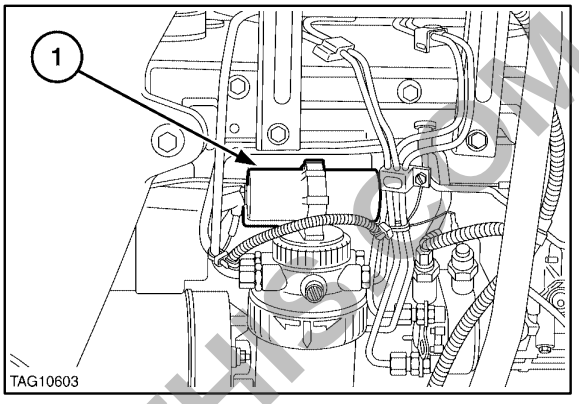

25

1. If there is no/little delivery, and voltage and fuel are present at the pump, the pump should be replaced.1.
2. With the key start on is there 12V between the terminals of the pump (1)? If 12V is not present check fuses, relay and wiring.

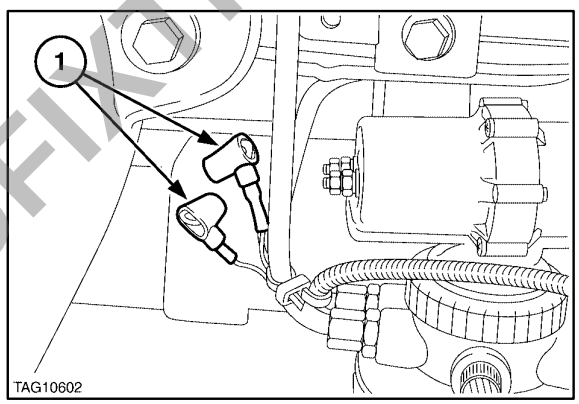

26

PREVIEW - YOUFIXTHIS.COM

Download full manual at youfixthis.com

DESCRIPTION AND OPERATION

The main parts of the torque converter (1) are the impeller (pump), the turbine, the stator and the front and rear covers. The impeller is integral with the rear cover and is driven by the engine flywheel by means of a drive plate.

The turbine (2), splined to the front input shaft, is splined to a stationary shaft (stator support) through a one-way clutch that permits the stator (3) to rotate only in the same direction as the impeller (1). All of the converter parts are enclosed in an oil-filled housing. The front and rear cover, welded together, form the housing.

The stator (3), is splined to a stationary shaft (stator support) through a one-way clutch that permits the stator to rotate only in the same direction as the impeller. All of the converter parts are enclosed in an oil-filled housing. The front and rear cover, being welded together, form the housing.

When the engine is running, the oil in the converter flows from the impeller (1) to the turbine (2) and back to the impeller through the stator (3). This flow produces a maximum torque increase. When enough oil flow is developed by the impeller, the turbine begins to rotate, driving the front input shaft. The torque multiplication gradually decreases as turbine speed approaches impeller speed, and becomes 1 to 1 when the turbine is being driven at nine tenths impeller speed.

When the turbine (1) is rotating at approximately nine tenths impeller speed, the converter stops multiplying torque because the oil is now acting on the rear face of the stator blades (2). The action of the oil on the rear face of the stator unlocks the one-way clutch (3), permitting the stator to rotate in the same direction as the turbine and impeller. Through this action the converter becomes an efficient fluid coupling by transmitting engine torque from the impeller to the turbine.

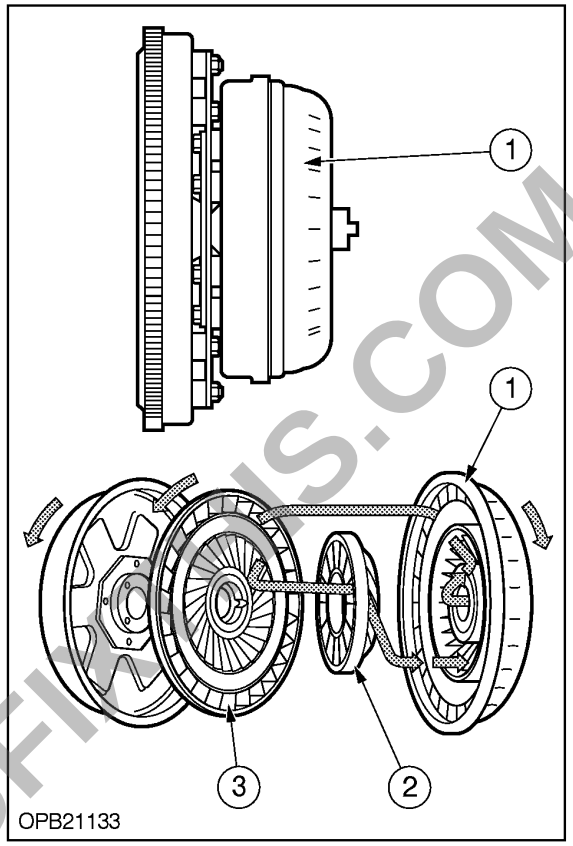

2

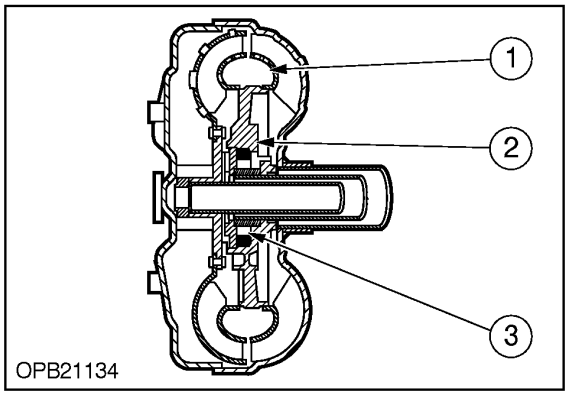

3

PREVIEW: YOUFIXTHIS.COM

Download full manual at youfixthis.com

8. OUTPUT SHAFT – Place Tool **297395** in the end of the shaft through the rear cover and position a dial indicator onto the bolt head.

   Using a small block and lever gently lift the shaft up (do not use excessive force) and record the reading. If the result is not to the specification of 0.025–0.076mm (0.001–0.003in) it will be necessary to add or delete the shims accordingly beneath the bearing cone in the rear cover.

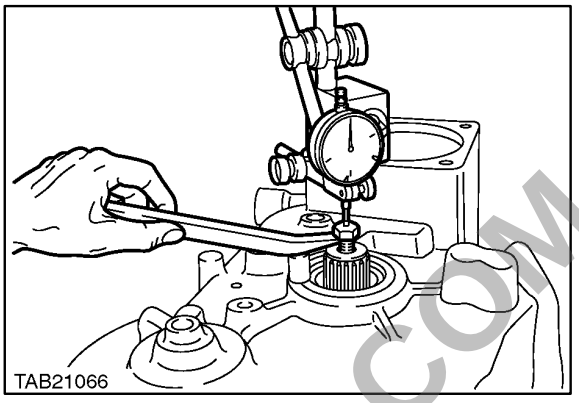

119

9. FOUR WHEEL DRIVE SHAFT – It will be necessary to place the tool **297395** into the bolt hole on the rear cover before positioning the dial indicator

   This shaft can be raised by placing a lever and block below the transmission and levering the output end of the shaft where it protrudes from the transmission.

   Gently lift the shaft up (do not use excessive force) and record the reading. If the result is not to the specification of 0.025–0.076mm (0.001–0.003in) it will be necessary to add or delete the shims accordingly beneath the bearing cone in the rear cover.

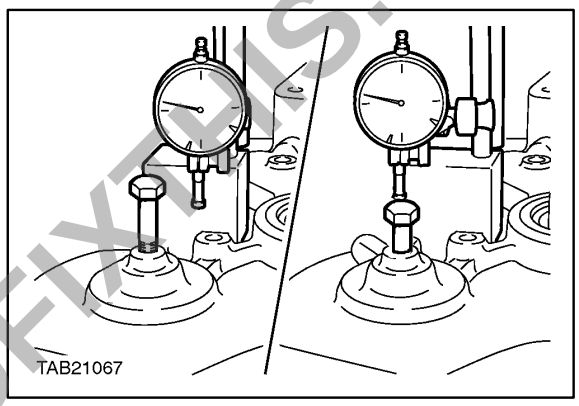

120

Upon completion of recording the results lift the rear cover off and add or delete shims beneath the cones on the relative shafts to achieve the required end floats.

Refit the rear cover with 4 bolts evenly spread around the cover and recheck end float through steps 1 to 5. When all correct end floats are achieved, proceed to rear cover attachment.

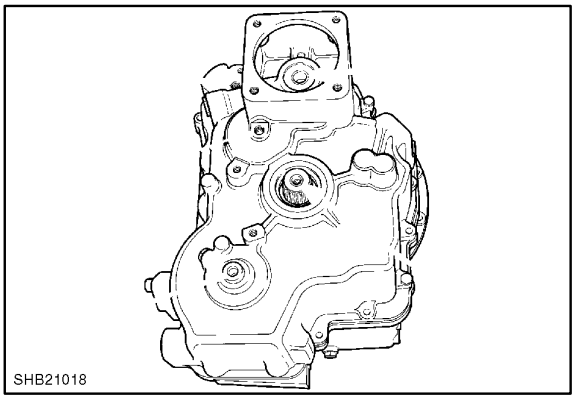

121

REAR COVER ATTACHMENT

Lift the rear cover and fit new seals to the end of the input shaft.

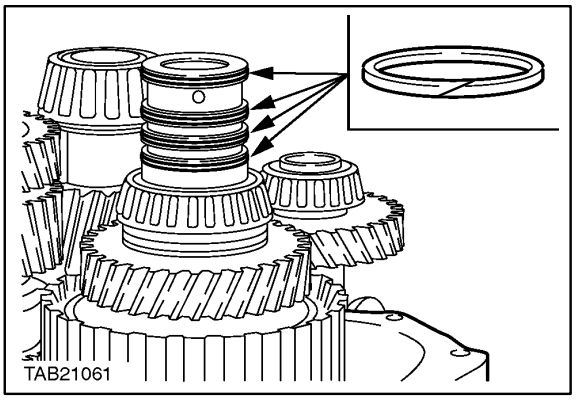

122

PREVIEW - YOUFIXTHIS.COM

Download full manual at youfixthis.com

FAULT CODE – F1

SHIFT LEVER INPUT FAULT

Perform Input test:

This test is used to verify operation of the shiftlever and its inputs.

In this mode **driving is possible**

NOTE: *The gear position indicators on the Microprocessor top cover are used to display the test information.*

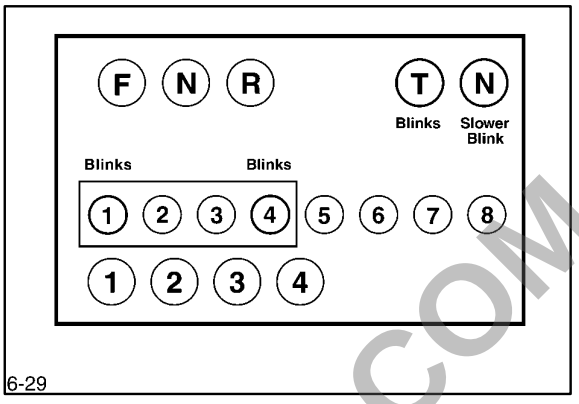

29

INPUT TEST REQUIREMENTS: *Powershift lever to be in forward position, twist to upshift (keep the shift lever in this position during power up) and turn the ignition on, this will place the microprocessor in the Input test mode.*

As shown in the table below placing the shift lever in different positions in this mode illuminates its respective LED (only 2 at the same time).

IMPORTANT: *Selftest modes can only be started WHILE POWERING UP (ignition on). Leaving the selftest mode is done by switching OFF the power of the Microprocessor (ignition off).*

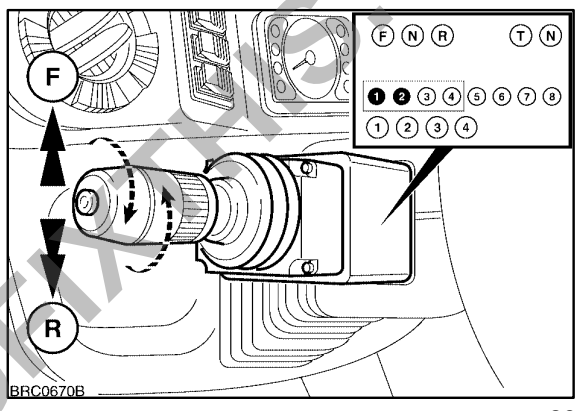

30

POWERSHIFT LEVER POSITIONS – WITH UP AND DOWN SHIFT SELECTION	LED – NUMBER	LED COLOUR – DISPLAYED = Okay
Neutral	2	RED
Neutral and Upshift	3	RED
Neutral and Downshift	1	RED
Forward	2	GREEN
Forward and Upshift	3	GREEN
Forward and Downshift	1	GREEN
Reverse	2	ORANGE
Reverse and Upshift	3	ORANGE
Reverse and Downshift	1	ORANGE

Operate Disconnect Button on loader lever	5	GREEN
Operate 4WD Switch on Instrument Panel and Foot brakes	6	GREEN
Foot Brake Test on later models	7	RED
Temperature and Speed Sensor: Too test disconnect lead on the sensor and short to ground	8	RED

PREVIEW - YOUFIXTHIS.COM

Download full manual at youfixthis.com

Reassemble in reverse order as for disassembly:

Install clutch piston in clutch drum; use caution not to damage sealing rings and install:
– piston wear plate on piston.
– clutch piston return spring.
– piston return spring retainer.
– spring retainer spacer.
– spring retainer snap ring.

Use a sleeve and press spring to refit (thick snap ring).

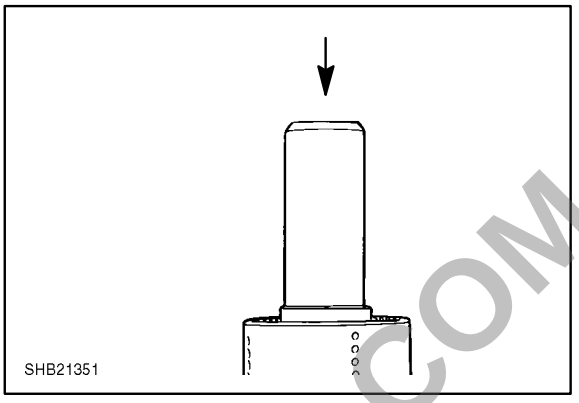

86

Install one friction half disc with friction material away from the piston.
– Install one steel disc.
– Alternate friction and steel discs until the proper amount of discs are installed, first and last discs are steel.
– Install one friction half disc with friction material down.

Install backing plate.
– backing plate spacer.
– backing plate spacer retainer ring.

Install thrust washer and thrust bearing.

Install clutch gear steel needle bearing.

Install clutch gear in clutch drum. Align splines on clutch gear with internal teeth of steel discs.
Do not force this operation. Gear splines must be in full position with internal teeth of all steel discs.

Install clutch gear needle bearing.

Install thrust washer and thrust bearing.

Install bearing

Install clutch shaft sealing rings.

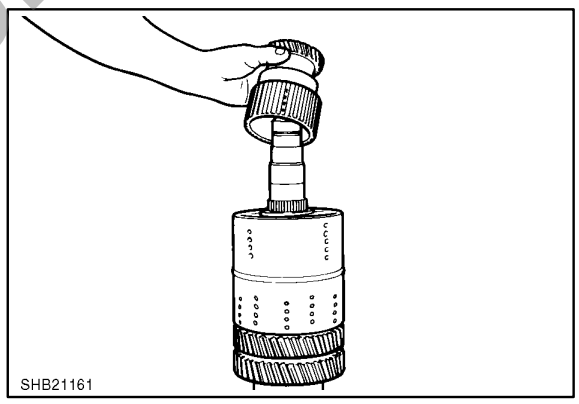

87

PREVIEW - YOUFIXTHIS.COM

Download full manual at youfixthis.com

Differential casing (1) and crown wheel assembly (2).

NOTE: *Prior to disassembly mark with a felt pen the two halves of the differential to ensure correct re–assembly.*

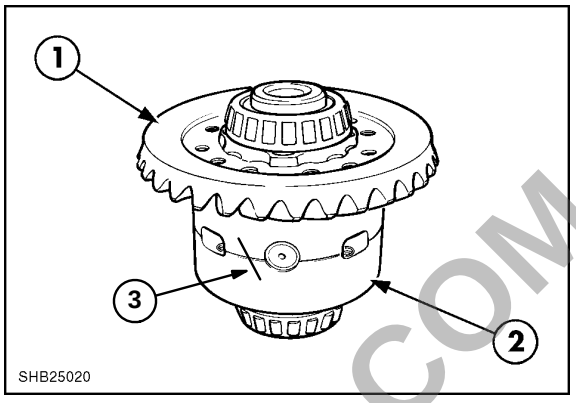

53

Differential Components

1. Thrust Washer
2. Side Gear
3. Spider Shaft
4. Differential Casing

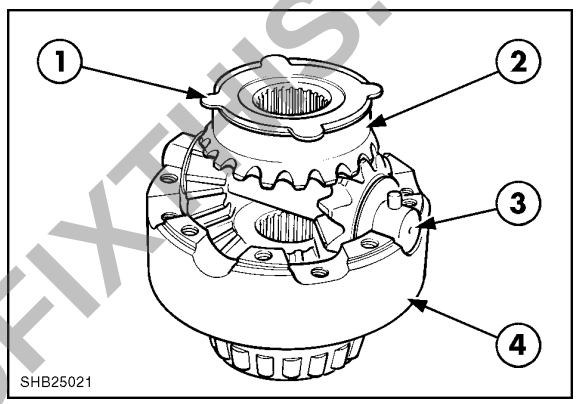

54

Differential disassembly

NOTE: *This is not a limited slip differential. The side gear flange is extended and a single thrust washer is fitted.*

1. Differential Housing
2. Thrust Washer
3. Side Gear
4. Spider Shaft
5. Side Gear
6. Thrust Washer
7. Crown Wheel
8. Retaining Bolts

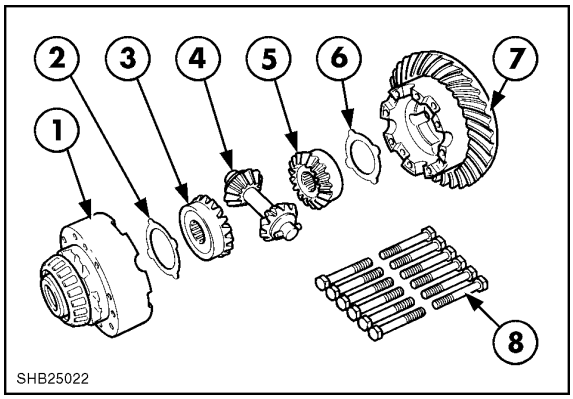

55

Pinion Identification marks

1. Pinion Height Measurement
2. Pinion to Crown Wheel Serial Number

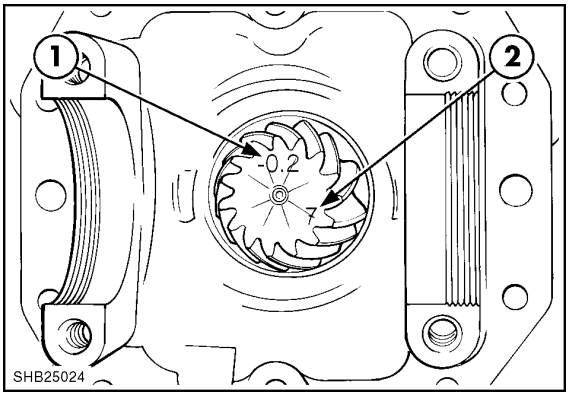

56

PREVIEW - YOUFIXTHIS.COM

Download full manual at youfixthis.com

Method 2

When the differential bearings are not changed the differential rolling resistance must be checked.

Remove the left hand axle bearing.

Remove the left hand axle housing and differential

Remove pinion.

Compress the differential Lock Spring and install shim stock to constantly engaged differential lock.

Refit differential and right hand axle housing but less the 1/4 shaft and brake discs.

Fit the 1/4 shaft in from the left hand side and fit adaptor tool onto shaft.

1. Differential Lock – Left Hand Brake Housing
2. 1/4 Shaft
3. Adapter Tool
4. Torque Meter

Check rolling resistance is between 2.3–10 Nm (20–90 lb in)

If out of specification the shim should be adjusted and bearing preload rechecked.

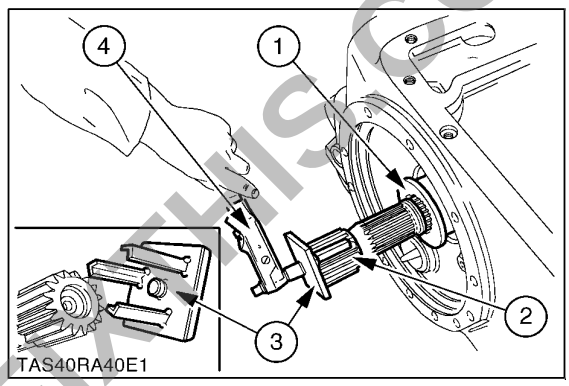

47

DIFFERENTIAL BEARING PRELOAD ADJUSTMENT SHIMS

Gap Reading	Part Number of Shim	Shim Thickness
0.86 – 0.99mm 0.034 – 0.039in	1803515	0.097 – 10.2mm 0.038 – 0.040in
1.02 – 1.14mm 0.040 – 0.045in	1803516	1.12 – 1.18mm 0.044 – 0.046in
1.17 – 1.13mm 0.046 – 0.051in	1803517	1.28 – 1.33mm 0.050 – 0.052in
1.32 – 1.45mm 0.052 – 0.057in	1803518	1.43 – 1.48mm 0.056 – 0.058in
1.47 – 1.60mm 0.058 – 0.063in	1803519	1.59 – 1.64mm 0.062 – 0.064in
1.63 – 1.75mm 0.064 – 0.069in	1803520	1.74 – 1.79mm 0.068 – 0.070in
1.78 – 1.90mm 0.070 – 0.075in	1803521	1.89 – 1.95mm 0.074 – 0.076in
1.93 – 2.06mm 0.076 – 0.081in	1803522	2.05 – 2.10mm 0.080 – 0.082in

PREVIEW - YOUFIXTHIS.COM

Download full manual at youfixthis.com

Oil Flow Through Stabilizer Control Valve Section

The stabilizer control valves are unique to all other valve sections.

The stabilizers are operated by two levers at the rear of the cab.

Each stabilizer circuit incorporates a pilot operated lock valve, Figure 27 which automatically prevents the leak down or collapse of a stabilizer should a hose burst, hydraulic system fail or the stabilizer levers are moved if the stabilizers are extended and the engine is turned off.

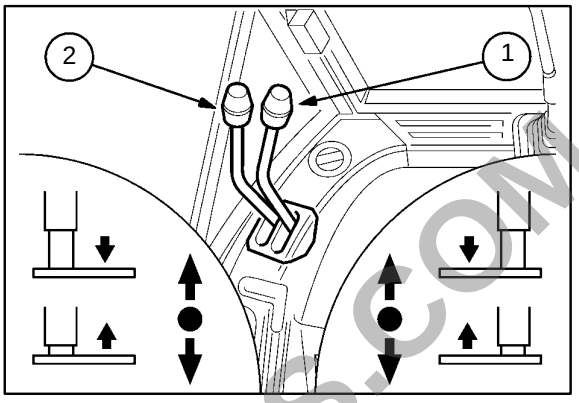

26

Control Valve In Neutral

When the stabilizer control valve is in neutral output from the rear pump can flow uninterrupted through the staggered open center gallery and the lands on the spool prevent flow to the cylinder ports.

In Neutral the lands on the spool **do not** trap the oil between the outlet port of the valve and the lock valves .

Oil in this part of the circuit is therefore free to return to reservoir, consequently there is no pressure in the pilot lines that operate the check valves.

The lock valves assume the closed position and oil in the stabilizers is trapped, preventing leak down of the stabilizer cylinders.

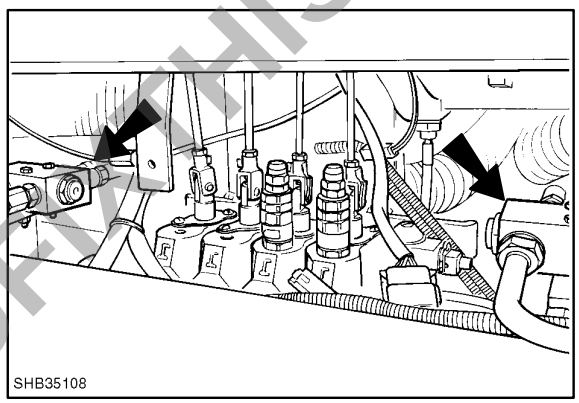

27

Control Valve Operating

When the stabilizer circuit is operated the spool is moved to either the extend or retract position.

Oil flow through the staggered open center gallery is blocked and system pressure rises in the parallel gallery.

Pressure oil flows past the spool through the cylinder port to the check valve.

The load sense lines in the lock valves are now pressurised which opens the valve to allow oil flow to the stabilizer cylinder.

Return oil from the opposite end of the cylinder also flows through a lock valve and back to reservoir across the spool.

Stabilizer Control Valve Section

1. Stabilizer Lock Valve
2. To Stabilizer Cylinder
3. Parallel Gallery
4. To Stabilizer Cylinder
5. Stabilizer Lock Valve
6. Centering Spring
7. Exhaust Gallery
8. Staggered Open Center Gallery
9. Spool

PREVIEW - YOUFIXTHIS.COM

Download full manual at youfixthis.com

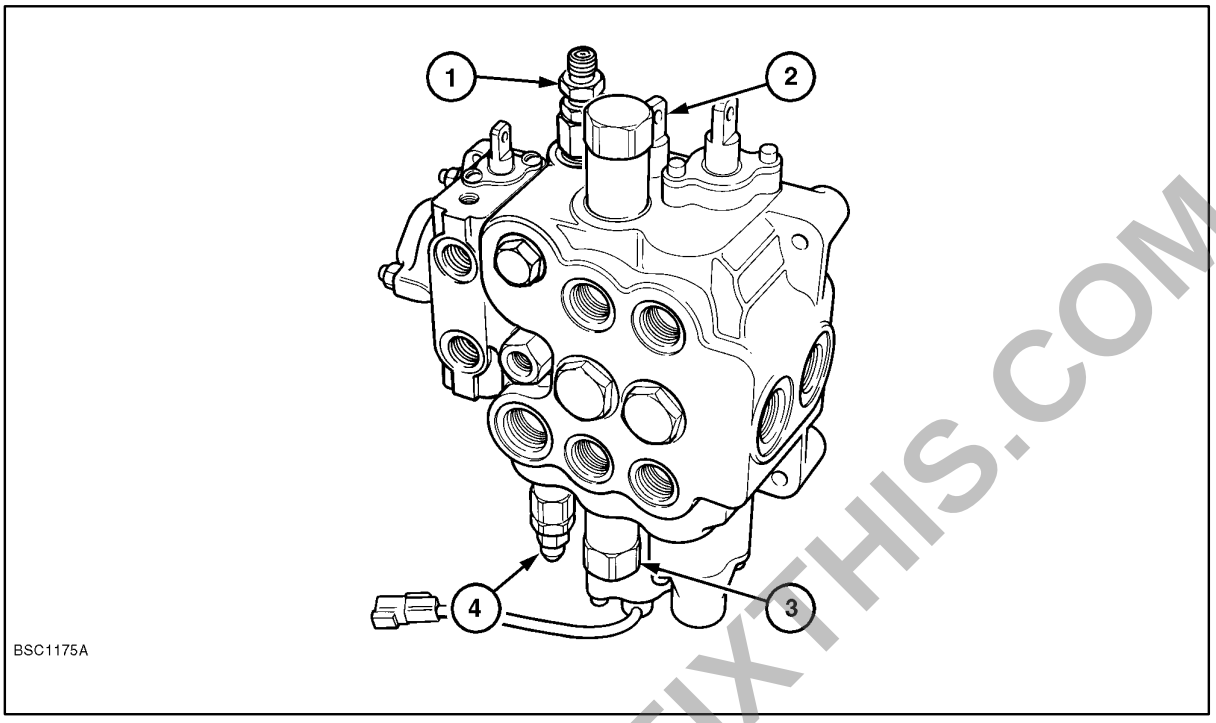

2

Loader Valve Assembly Relief Valve Location

1. Rear Pump Unload Valve @ 170 bar (2465 psi)
2. Loader Bucket Relief Valve Rod End @ 227 bar (3300 psi)
3. Loader Bucket Relief Valve Piston End @ 160 bar (2300 psi)
4. System Pressure Relief Valve
   Machines With Rear Pump Unload Valve 204 – 211 bar (2958 – 3059 psi)

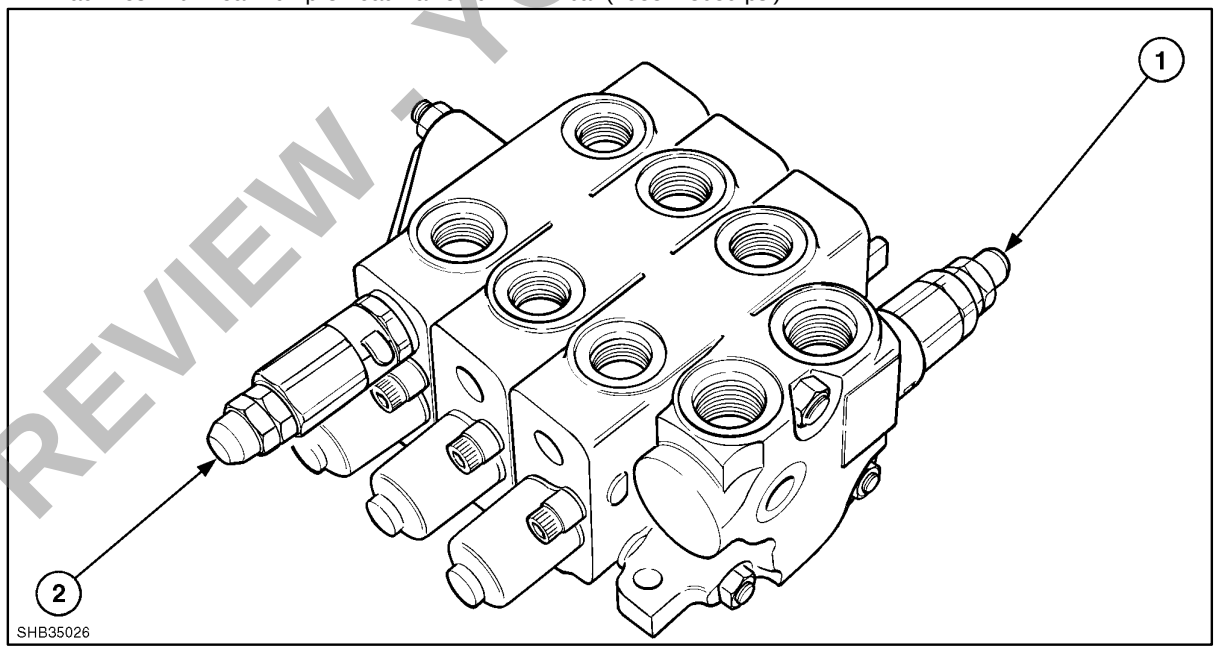

3

Stabilizer and Extendible Dipper Control Valve Assembly

1. Rear Pump Relief Valve– Pilot Operated @ 196 – 202 bar (2842 – 2929 psi)
2. Extendible Dipper (Piston End) Relief Valve– Pilot Operated @164 bar (2375 psi)

PREVIEW - YOUFIXTHIS.COM

Download full manual at youfixthis.com

FAULT FINDING - HYDRAULIC PUMP

PROBLEM	POSSIBLE CAUSES	CORRECTION
System noisy.	Worn or damaged pump gears or pressure plates.	Hydraulic pump performance test.
	Aeration: Air entering the systems at: suction tube, pump shaft, fittings, or cylinder glands.	Hydraulic pump performance test.
	Cavitation: Restrictions in the system at the suction line or at the suction screen in the reservoir.	Visual and/or hydraulic pump performance test.
	Water in the system.	Visual.
	Tubing vibration.	Visual.
	Cold hydraulic oil.	Check hydraulic oil operating temperature.
	Wrong type oil being used.	Investigate/drain and refill.
Hydraulic oil exhausts from breather at the reservoir.	Reservoir overfilled.	Check hydraulic oil level.
	Aeration: Air entering the system at: suction tube, pump shaft, fittings, or cylinder glands.	Hydraulic pump performance test.
	Cavitation: Restriction in the system at the suction screen in the reservoir.	Visual and/or hydraulic pump performance test.
Oil heating.	Oil supply low.	Fill reservoir.
	Contaminated oil.	Drain reservoir and refill with clean oil.
	Setting of relief valve too high or too low.	Drain reservoir and refill with clean oil. Test relief valves.
	Oil in system too light.	Drain reservoir and refill with correct viscosity oil.
	Oil cooler fins blocked.	Clean oil cooler.
Shaft seal oil leakage.	Worn shaft seal.	Replace shaft seal and inspect pump.
Foaming oil.	Low oil level.	Fill reservoir.
	Air drawn into suction line.	Check/tighten suction line.
	Wrong oil grade.	Drain and refill with correct oil.

PREVIEW - YOUFIXTHIS.COM

84 000 Backhoe

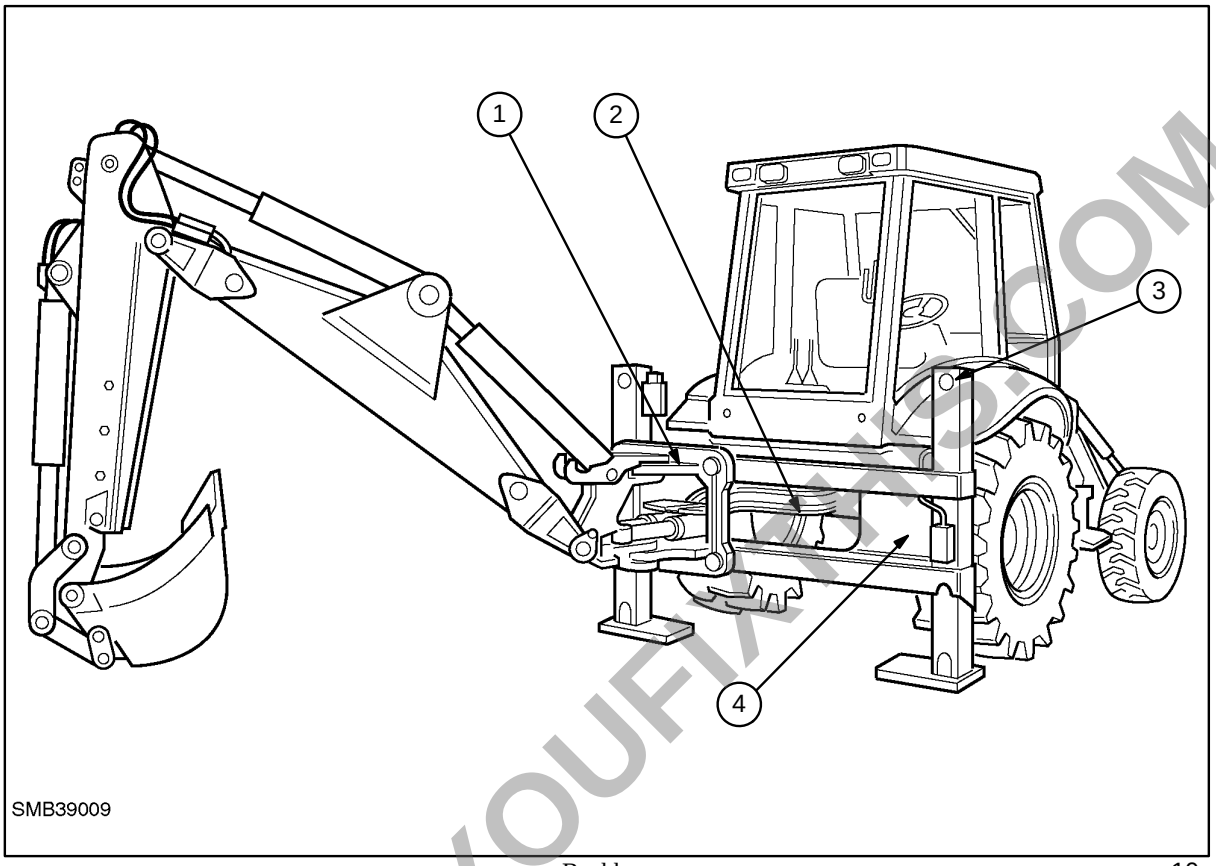

Backhoe 10

BACKHOE 84 000 – Disassembly of the backhoe is similar for both sideshift and center pivot models upto the swing post.

IMPORTANT: *Before disconnecting any hoses or cylinders relieve all pressure in the hydraulic system and have ready suitable clean containers to drain the oil into. Ensure all ports and hoses are plugged or capped to prevent dirt ingress during overhaul.*

To remove the backhoe it will be necessary to disconnect or remove the following with the backhoe fully supported:

DISCONNECT;

Hoses (de–pressurise the system first)

REMOVE:

Sideshift only – Backhoe support frame to chassis

Sideshift Backhoe

The backhoe on sideshift models is attached to a frame that is attached to the vehicle and can traverse the rear of the machine. For disassembly purposes the backhoe and its support frame can be removed from the machine.

Center Pivot Backhoe

On center pivot models the backhoe is connected directly to the chassis and can be removed from the machine at that point.

In the following pages are the torque figures for the various assemblies that will may removed to affect repairs

PREVIEW - YOUFIXIT.COM

SYSTEM DESCRIPTION AND OPERATION

Refrigerant

To achieve the absorption and the release of heat which is, in essence, the function of an air conditioning system, requires the use of a suitable “refrigerant” - a liquid that has a relatively low temperature boiling point, plus certain desirable safety and stability features.

The refrigerant used in the air conditioning system is refrigerant R134a.

NOTE: *To help protect the environment legislation has been introduced in most territories banning the release into the atmosphere of refrigerants,including R134a. All service procedures contained in this manual can be carried out without the need to release refrigerant into the atmosphere.*

In order to prevent the incorrect type of refrigerant being charged to the system the service valves fitted to the Backhoe Loader and necessary to connect up refrigerant recovery, evacuation and recycling/recharging equipment will be of two different sizes as recognised and specified by the air conditioning industry.

⚠ WARNING ⚠

R134a refrigerant is ***not compatible*** *with R–12 refrigerant.* ***Do not*** *attempt to replace R134a refrigerant with R–12 refrigerant or test the system using gauges or equipment previously used with R12 as damage to the system will result.*

R-134a refrigerant is stable at all operating temperatures and able to absorb great quantities of heat.

The boiling point of R-134a is -22° C (-15° F) at atmospheric pressure.

If the pressure is increased, R-134a will readily vaporize to absorb heat at temperatures between -11.7° C (11° F) at 1.9 bar (27.5 psi) and 0°C (32° F) at 2.9 bar (42 psi) in the evaporator.

At higher pressures, R-134a will condense and give off heat at temperatures between 48° C (118° F) at 12.4 bar (180 psi) and 58° C (136° F) at 15.85 bar (230 psi) in the condenser.

PREVIEW - YOUFIXTHIS.COM

CAB – POWERSHIFT 4 WHEEL STEER, 108 hp (World–wide)

Fuse No.	Rating	Colour	Circuit
F1/A	15A	Blue	Rear Windshield Motor and Washer Motor
F1/B	7.5A	Brown	Fuel Shut Off, Anti – Theft, Fuel Pump, Thermostart
F1/C	10A	Red	All Wheel Steer
F2/A	15A	Blue	Stop Light Instruments, Switches, Brake Oil, Seat, Buzzer
F2/B	15A	Blue	Blower Motor
F2/C	20A	Yellow	Engine Glow Plug
F3/A	3A	Violet	Rear right / Front Left side Instrument, Air Cond light
F3/B	3A	Violet	Rear left / Front right side, licence plate light
F3/C	10A	Red	Rapid connect, Glide Ride, Hand Hammer, Cold Start
F4/A	5A	Orange	EGS Lever, 4WD, Transmission disconnect
F4/B	10A	Red	Backhoe Hammer Valve, Loader Self Levelling
F4/C	10A	Red	Sideshift Lock, Boom Lock (not N/America)
F5/A	15A	Blue	Front Working lamps Internal
F5/B	10A	Red	Dip Beam (not N/America)
F5/C	15A	Blue	Main Beam (not N/America)
F6/A	7.5A	Brown	Rotating Beacon
F6/B	7.5A	Brown	Flashers
F6/C	7.5A	Brown	Hand Hammer Valve, 4WD, Differential Lock
F7/A	10A	Red	+ 30 Warning and Horn Fuse
F7/B	10A	Red	Auxiliary 12v socket, Radio, Cab interior light
F7/C	6 A	Black*	Front Windshield Wiper
F8/A	15A	Blue	Rear Work Lamps External
F8/B	15A	Blue	Front Work Lamps External
F8/C	15A	Blue	Rear Work Lamps Internal

* Special Bi Metal, re–setting Fuse

RELAYS

K1	Not Used
K2	Handbrake on Alarm / Speed Alarm
K3	Starting Relay
K4	Loader Self Levelling
K5	Headlamp Main Beam (not N/America)
K6	Front Work Lights 2 off – Internal
K7	Rear Work Lamps 2 off – Internal
K8	Front Work Lights 4 off – External
K9	Rear Work Lamps 4 off– External
K10	Optional
K11	not used
K12	Flashers

BUZZER

BZ1	Audible Warning Buzzer

CONNECTORS

CN	Main Harness Connections into Fuse Board

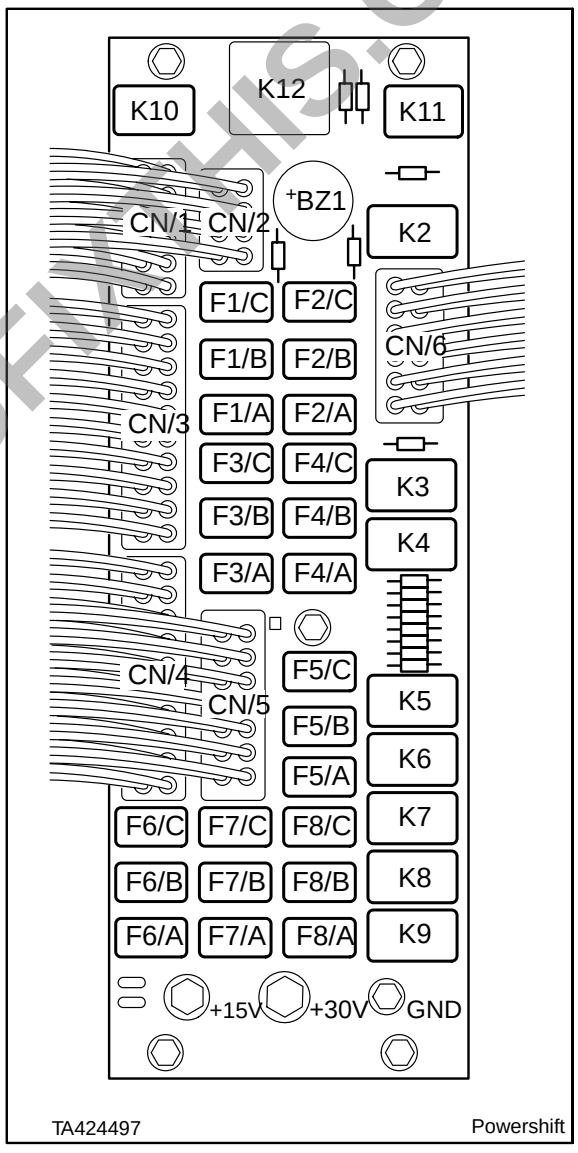

TA424497 Powershift

PREVIEW - YOUFIXTHIS.COM

MISCELLANEOUS ITEMS

Serial number from 031026803

Components and their (Connectors)

H15 – Beacon Lamp
. . . . . X80 = 2 Pin
KC – Fuse and Relay Board
. . . . . XC2 = 7 Pin
. . . . . XC3 = 21 Pin
. . . . . XC4 = 21 Pin
. . . . . XC5 = 17 Pin
S15 – Beacon Lamp Switch
S41 – Indicator Switch
X10 = Solenoid Valves Connector 24 Pin
X16 = Side Dashboard Connector 21 Pin

WIRE COLOURS:
A = LIGHT BLUE . . . . . M = BROWN
B = WHITE . . . . . N = BLACK
C= ORANGE . . . . . R = RED
G = YELLOW . . . . . S = PINK
H = GREY . . . . . V = GREEN
L = BLUE . . . . . Z = VIOLET
Example of mixed colours
G/V = Yellow/Green (Transverse colours)
G–V = Yellow–Green (Longitudinal Colours)

PREVIEW - YOUFIXTHIS.COM

X52

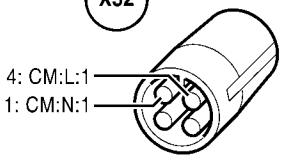

X48

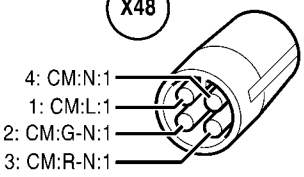

X42

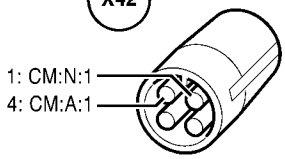

X37

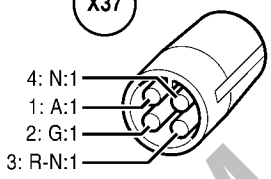

X18

1: CM:N:1
2: CM:G-N:1
3: CM:G-N:1
4: CM:N:1
5: CM:L:1
6: CM:R-N:1
7: CM:R-N:1
8: CM:A:1
9: CM:N:1
10: CM:G:1

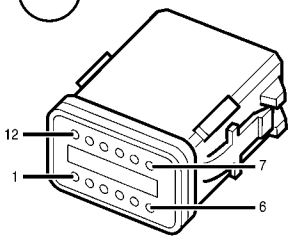

XC5

1: CM:A/N:2(X2)
2:
3: CM:A/B:1
4: CM:R/N:1
5:
6: CM:G:2(X2)
7: CM:L:1(X2)
8: CM:G-N:1
9: CM:A:1(X2)
10: CM:R-N:1.5
CM:B/R:1.5
11: CM:H-N:1(X2)
12: CM:H:1(X2)
13: CM:V-N:1(X2)
14: CM:V:1(X2)
15:
16: CM:A-G:1
17: CM:R-N:1(X2)

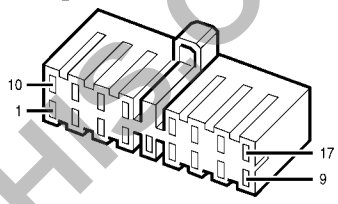

XC1

1: CM:C:1
2:
3:
4: CM:R/N:1
CM:B/R:1
5: CM:B-R:1
6:
7: CM:R-N:1
8: CM:C-R:1(X2)
9:
10: CM:A-N:1
11:

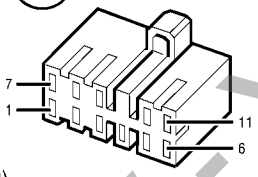

1: CM:A-G:1
2: CM:R:1.5
3: CM:H-R:1
4: CM:R:2.5
5: CM:H-N:1.5
6: CM:G:1
7: CM:M/B:1
8: CM:V-N:1
9: CM:L/R:1
10: CM:H-L:1
11: CM:H-N:1

XC4

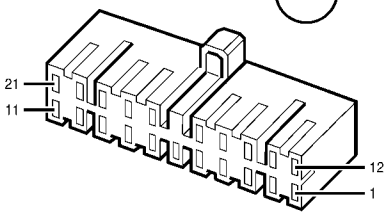

12: CM:G:1.5
13: CM:V:1(X2)
14: CM:A:1
15: CM:G-N:1
16: CM:L:1
17: CM:H:1(X2)
18: CM:A/R:1.5
19: CM:A/B:1.5
20: CM:H/R:1.5
21: CM:A/N:1.5

S32

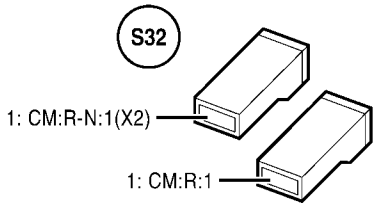

1: CM:H-N:1
2: CM:L:1
3: CM:G-V:1
4: CM:G-S:1
5:
6:
7: CM:C/N:1.5
8: CM:H-R:1
9:
10: CM:A-B:1
11: CM:C-N:1(X2)

XC3

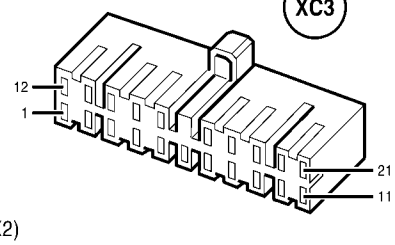

12: CM:A:1
13: CM:G-N:1(X2)
14: CM:A-V:1
15: CM:V-N:1
16: CM:R-V:1(X2)
17: CM:A/N:1.5
18: CM:C/B:1.5
19: CM:A-G:1
20: CM:G:1
21: CM:R-N:1

S33

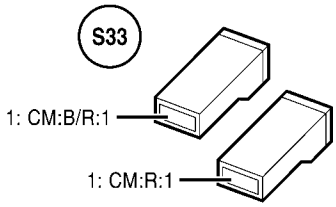

BRC0768B

PREVIEW - YOUFIXIT.COM

FRONT LIGHTS

Serial number from 031026803

Components and their (Connectors)

BZ1 – Audible Warning Buzzer
HA2 – Horn
K5 – . Not Used in N/America
K12 – Flashers
KC – Fuse and Relay Board
. . . . . XC1 = 11 Pin
. . . . . XC2 = 7 Pin
. . . . . XC3 = 21 Pin
. . . . . XC4 = 21 Pin
. . . . . XC5 = 17 Pin
KF – . Flasher Unit
. . . . . X58 = 13 Pin
KS – . Steering Unit
. . . . . X95 = 12 Pin
. . . . . X96 = 8 Pin
S9 – Lights Switch
S10 – Hazard Switch
S31 – Brake Oil Level Sender
S40 – Front Axle Sensor
. . . . . X97 = 3 Pin
S42 – Rear Axle Sensor
. . . . . X98 = 3 Pin
ST2 – Front Panel
. . . . . X70 = 12 Pin
X9 = . Front Dashboard Connector13 Pin
X10 = Solenoid Valves Connector 24 Pin
X33 = Bridge Connector 2 Pin
X59 = Right Lights Connector 5 Pin
X60 = Horn & Left Lights Connector 7 Pin

WIRE COLOURS:
A = LIGHT BLUE . . . . . M = BROWN
B = WHITE . . . . . N = BLACK
C= ORANGE . . . . . R = RED
G = YELLOW . . . . . S = PINK
H = GREY . . . . . V = GREEN
L = BLUE . . . . . Z = VIOLET

Example of mixed colours
G/V = Yellow/Green (Transverse colours)
G–V = Yellow–Green (Longitudinal Colours)

PREVIEW - YOUFIXTHIS.COM

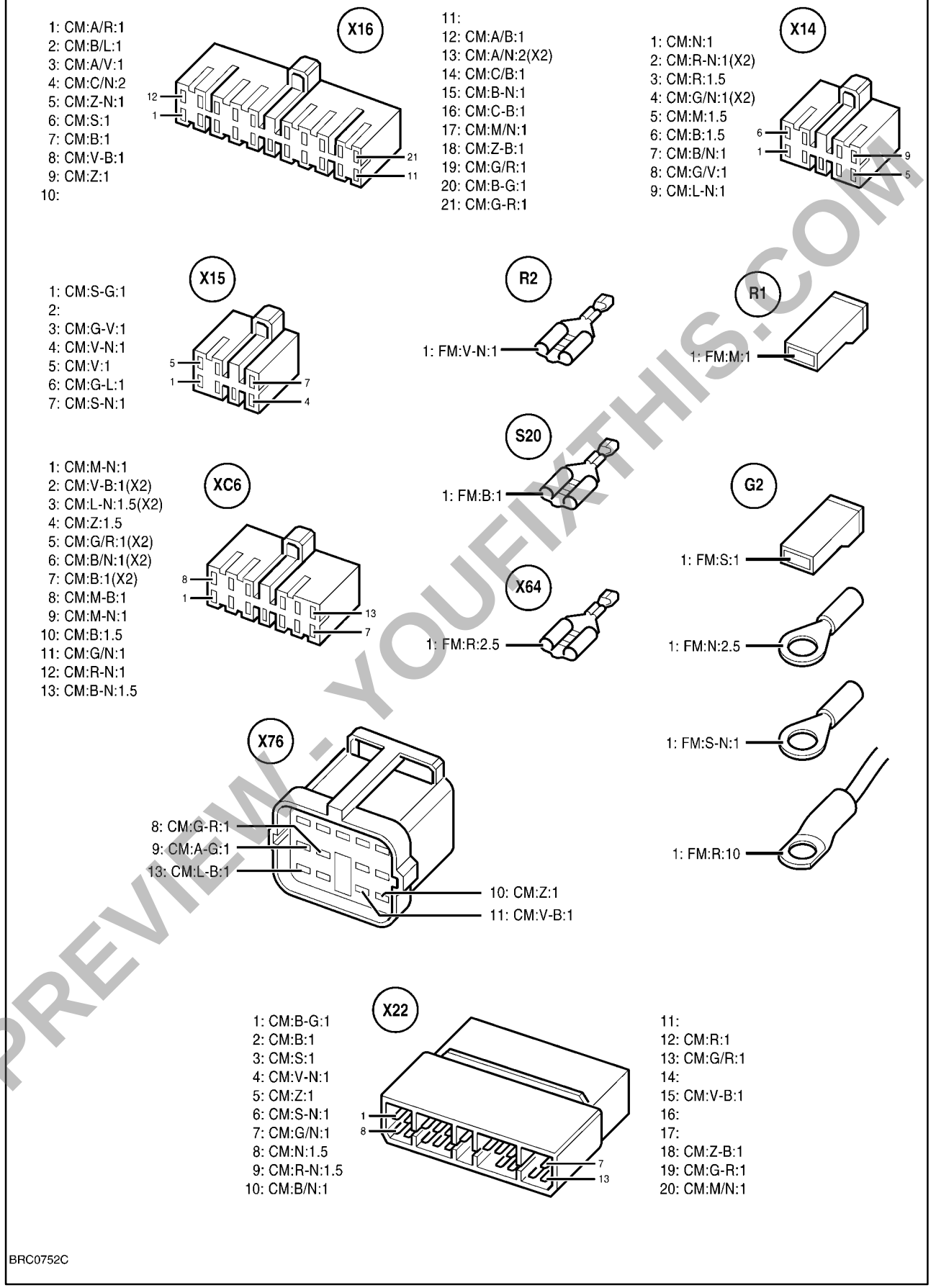

PREVIEW - YOUFIXTHIS.COM

NOTES

PREVIEW - YOUFIXTHIS.COM

BATTERY MAINTENANCE AND TESTS

Specific Gravity

The specific gravity of the battery electrolyte indicates the state of charge. Fully charged the specific gravity of the electrolyte is 1.280 minimum at 25°C.

Alternatively the approximate state of charge can be measured by using an accurate digital volt meter (+/– 0.01V) as follows:–

Less than	10.5V Battery un–serviceable*
Less than	11.8V Battery discharged
Less than	12.3V Battery 1/2 charged
Better than	12.6V Battery fully charged

* See note under tests for possible recovery of a mildly sulphated battery.

Battery voltage to be taken with the battery unloaded and:–

A) After the battery has rested unloaded for at least 4 hours.

B) If the vehicle has recently run or battery has recently been charged, switch on headlamps for 2 minutes.

When a battery discharges, sulphuric acid in the electrolyte combines chemically with the plates and this action lowers the specific gravity of the solution.

A battery hydrometer will determine the specific gravity of the electrolyte in a cell and the amount of unused sulphuric acid in the solution is a measure of the degree of charge of that cell.

The lower the temperature at which a battery is required to operate, the more necessary it is that the battery is maintained in a fully charged condition. For example a battery with a low specific gravity of 1.225 at 27°C (80°F) will operate the starting motor at warm ambient temperatures but may not, due to lower battery efficiency at a low temperature.

Table 1 shows the effect of temperature on the efficiency of a typical battery.

Table 1

Temperature	Efficiency of a Fully Charged Battery
25.0°C (77.0°F)	100%
–4.5°C (23.9°F)	82%
–24.0°C (–11.2°F)	64%
–27.5°C (–17.5°F)	58%
–31.0°C (–23.8°C)	50%
–34.5°C (–30.1°C)	40%
–37.5°C (–35.5°C)	33%

Maximum battery life will be obtained if the correct care and periodic inspection is given. It is important that output capacity should not be exceeded by constant and excessive overloading and that charging requirements are maintained.

Servicing The Battery

⚠ WARNING ⚠

Batteries contain sulphuric acid and during charging generate a highly explosive mixture of hydrogen and oxygen gases.

- *Never use equipment that generates flames or sparks in order to control electrolyte level*
- *Do not remove the battery cover plugs without protection for eyes and hands.*

When servicing a battery the following steps should be observed:

1. Maintain the electrolyte to the recommended level of 6 mm (0.25 in.) above the plates. If this is not observed the acid will reach a high concentration that will damage the separators and impair the performance of the plates.
2. Use only distilled or de–mineralised water, do not overfill and never use tap water or water from a rain barrel or other source.
3. Always keep the battery at least 75% charged otherwise the plates will become sulphated and loss of efficiency will result with possible damage from freezing at low temperatures.
4. Avoid overcharging the battery as excessive charging will create high internal heat that will cause plate grid deterioration and produce water loss.
5. When fast charging ensure the battery temperature does not exceed 50°C.
6. Do not add sulphuric acid to a cell unless the electrolyte has been lost through spilling. Before replenishing ensure the solution is at the correct specific gravity. A slow charge is the only method to be employed to fully charge a battery. A high rate charger can be used to quickly boost the battery capacity but this must be followed by a slow charge rate to bring the battery to full capacity.

PREVIEW - YOUFIXTHIS.COM

SPECIFICATIONS

CENTER PIVOT LOADER DIMENSIONS AND PERFORMANCE

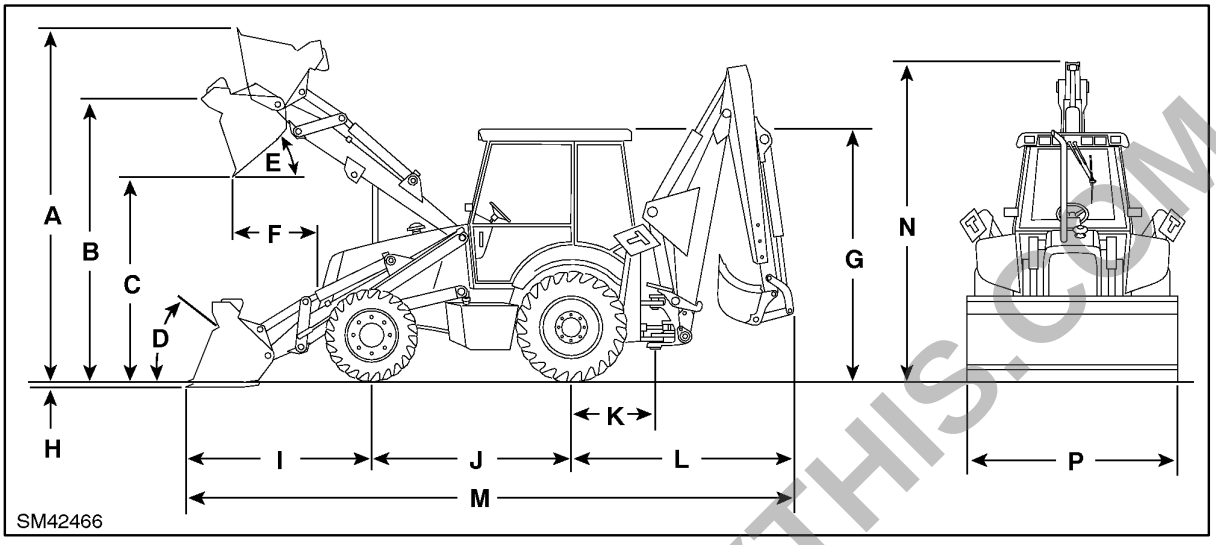

2

(PER SAE J 732 C) WITH TIRES 2WD FRONT = 11L–16SLF3 REAR = 17.5L–24 R4
With Two or Four Wheel Drive and (1.0m^3 bucket) 4WD FRONT = 12–16.5 REAR = 17.5L.24 R4

A. Overall Operating height	2WD 4284mm (13ft 9in) – 4WD 4298mm (14ft 0in)
Lift Capacity at Maximum Height	3598 kg (7916 lbs) – 4WD 3553 kg (7833 lbs)
Breakout Force	6329 kg (13924 lbs) – 4WD 6296 kg (13880 lbs)
B. Height to Hinge Pin Full Raise	2WD 3456mm (11ft 2in) – 4WD 3470mm (11ft 3in)
C. Dump Height	2WD 2716mm (8ft 8in) – 4WD 2732mm (8ft 9in)
D. Maximum Roll back at ground level	40°
E. Dump Angle	45°
F. Reach fully raised	2WD 781mm (2ft 5in) – 4WD 776mm (2ft 5in)
G. Height to Top Of Cab	2850mm (9ft 3in)
H. Digging Depth	2WD 127mm (4.9in) – 4WD 112mm (4.4in)
I. Center line of axle to Bucket Lip at ground level	1987mm (6ft 5in)
J. Wheelbase	2WD 2175mm (7ft 1in) – 4WD 2175mm (7ft 1in)
K. Center Line of rear axle to Center line of swing post	1120mm (3ft 6in)
L. Center Line of rear axle to rear of backhoe bucket	2933m (9ft 5in)
M. Overall Length with bucket at ground level	7100mm (23ft 1in)
N. Overall Height Lip of Bucket to top of Boom	3900mm (12ft 7in)
P.– Overall Width With Bucket	2250mm (7ft 4in)
P.– Overall Width Less Bucket	2170mm (7ft 2in)
Weight of machine Loader/Backhoe* example (4WD, 6 in 1 Bucket, Counterweights)	7700 kg (16940 lbs)

PREVIEW - YOUFIXTHIS.COM

This kit contains the parts necessary to convert a backhoe loader to standard 2–lever controls. Conversion from a 2–lever ISO, 3–lever, and 4–lever controls requires different components of the 2–lever kit. as a result, all kit parts may not be used.

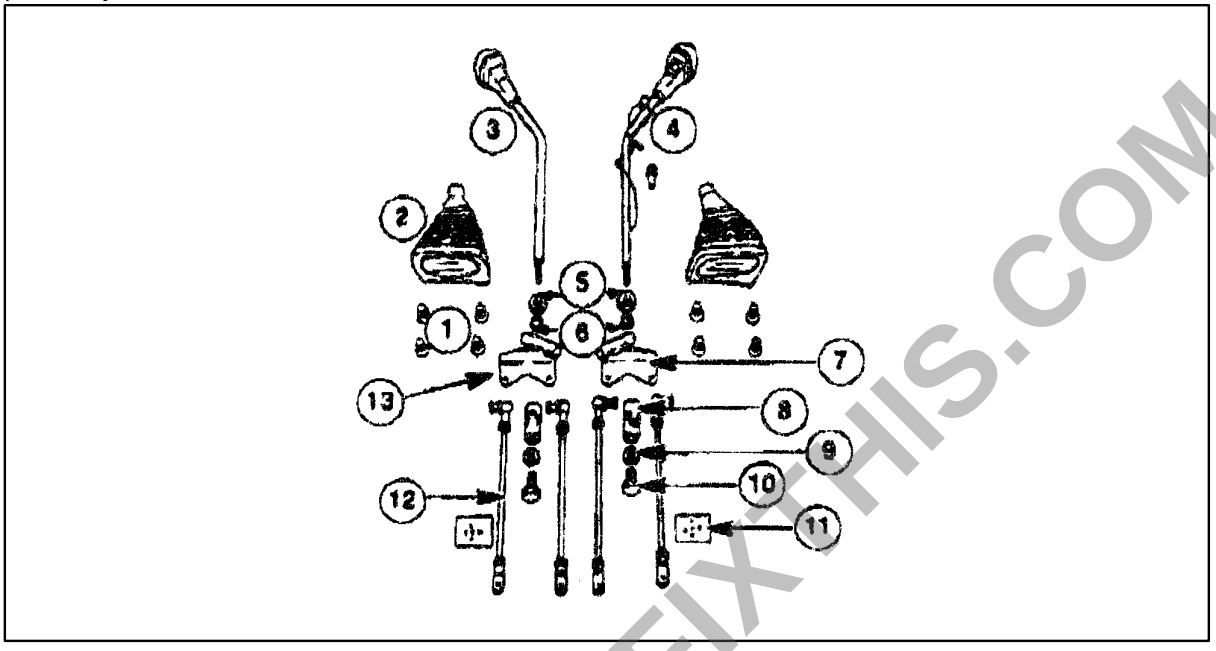

1

Kit Contents

1. Boot fasteners (8)
2. Boot (2)
3. R.H. knob and lever
4. L.H. knob, lever and horn button
5. Nut, 1mm (2)
6. Washer, 12mm (2)
7. Bracket L.H.
8. U–joint (2)
9. Lock washer, 12mm (2)
10. Cap screw, 12 x 25mm (2)
11. Decals (2)
12. Tie rod assembly (4)
13. Bracket R.H.
14. Control lever console (not shown)

PREVIEW - YOUFIXTHIS.COM

Download full manual at youfixthis.com

N.1

1

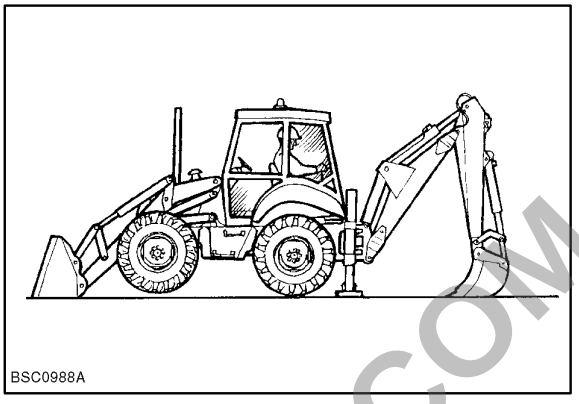

N.2

2 A

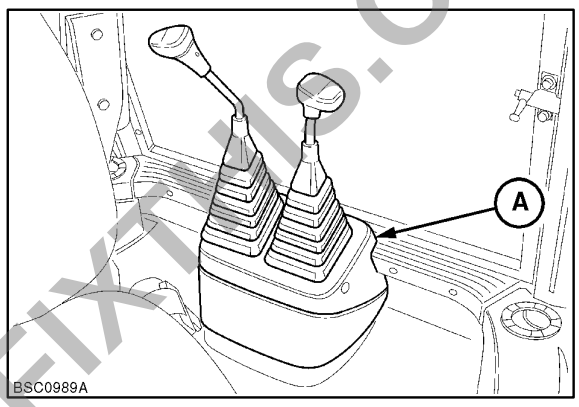

3 B C

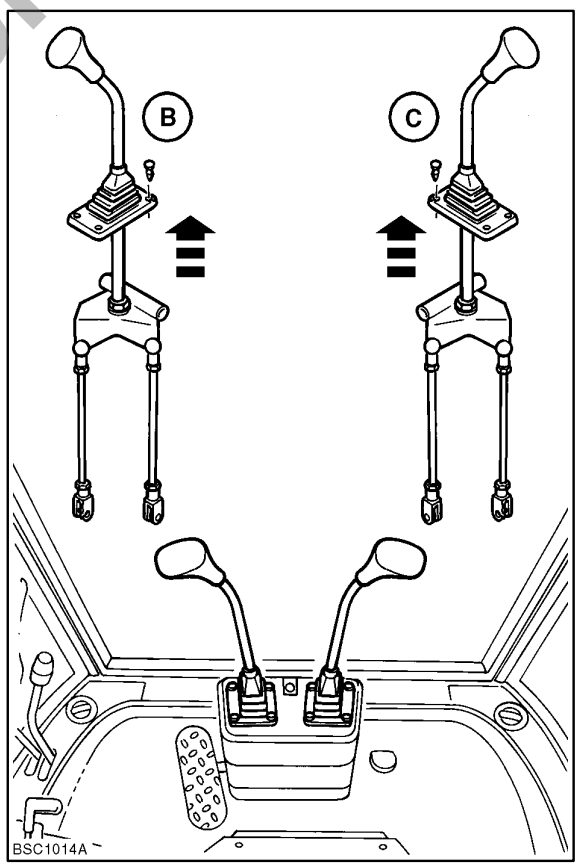

PREVIEW - YOUFIXIT.IS.COM

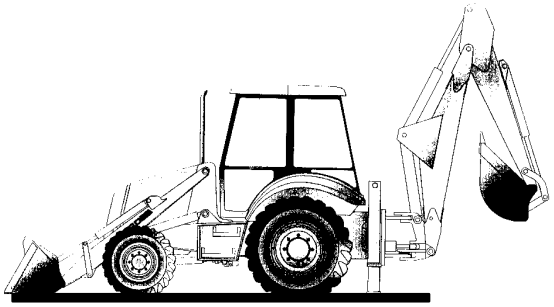

NEW HOLLAND

LB 115

ASSEMBLY INSTRUCTIONS

BACKHOE HAMMER DIPPERSTICK TUBES

TUYAUTERIES DU BRAS POUR MARTEAU HYDRAULIQUE DE PELLE

HYDRAULIK HAMMER LÖFFELSTIELLEITUNG

TUBOS EN EL BRAZO DE ATAQUE PARA MARTILLO DE RETROEXCAVADORA

TUBI BRACCIO DI SCAVO MARTELLO RETROESCAVATORE

LEPELSTEELLEIDINGEN VAN HAMER VAN GRAAFARM

GRAVEMASKINE HAMMER – SLANGER FOR GRAVEARM

KIT/SATZ/SÆTTE

2.5	TIME

NEW HOLLAND

SERVICE

PREVIEW - YOUFIXTHIS.COM

Download full manual at youfixthis.com

PREVIEW ONLY

You're viewing 25 of 1495 pages

The full manual includes:

- All 1495 pages, complete
- Searchable PDF (find any keyword)
- No watermarks
- Instant download
- Print-ready quality

GET FULL MANUAL NOW

New Holland LB75.B, LB90, LB110, LB115.B Repair Manual

Scan or click anywhere
youfixthis.com

Click anywhere on this page to get the full manual