Ref	Part Number	Qty	Description

PREVIEW - YOUFIXTHIS.COM

Download full manual at youfixthis.com

0.060(01) CYLINDER HEAD

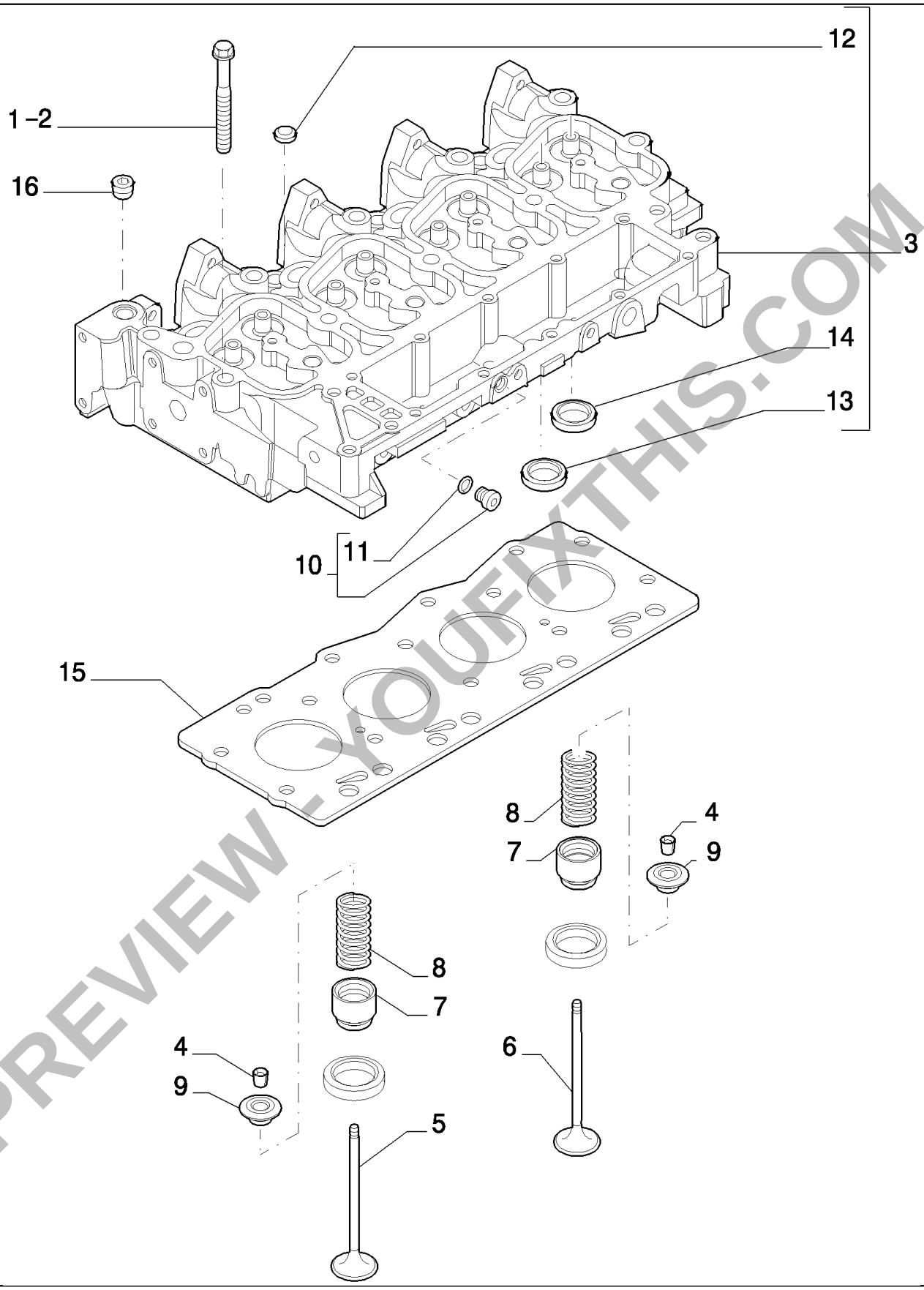

PREVIEW - YOUFIXTHIS.COM

Download full manual at youfixthis.com

0.240(01) TURBOCHARGER

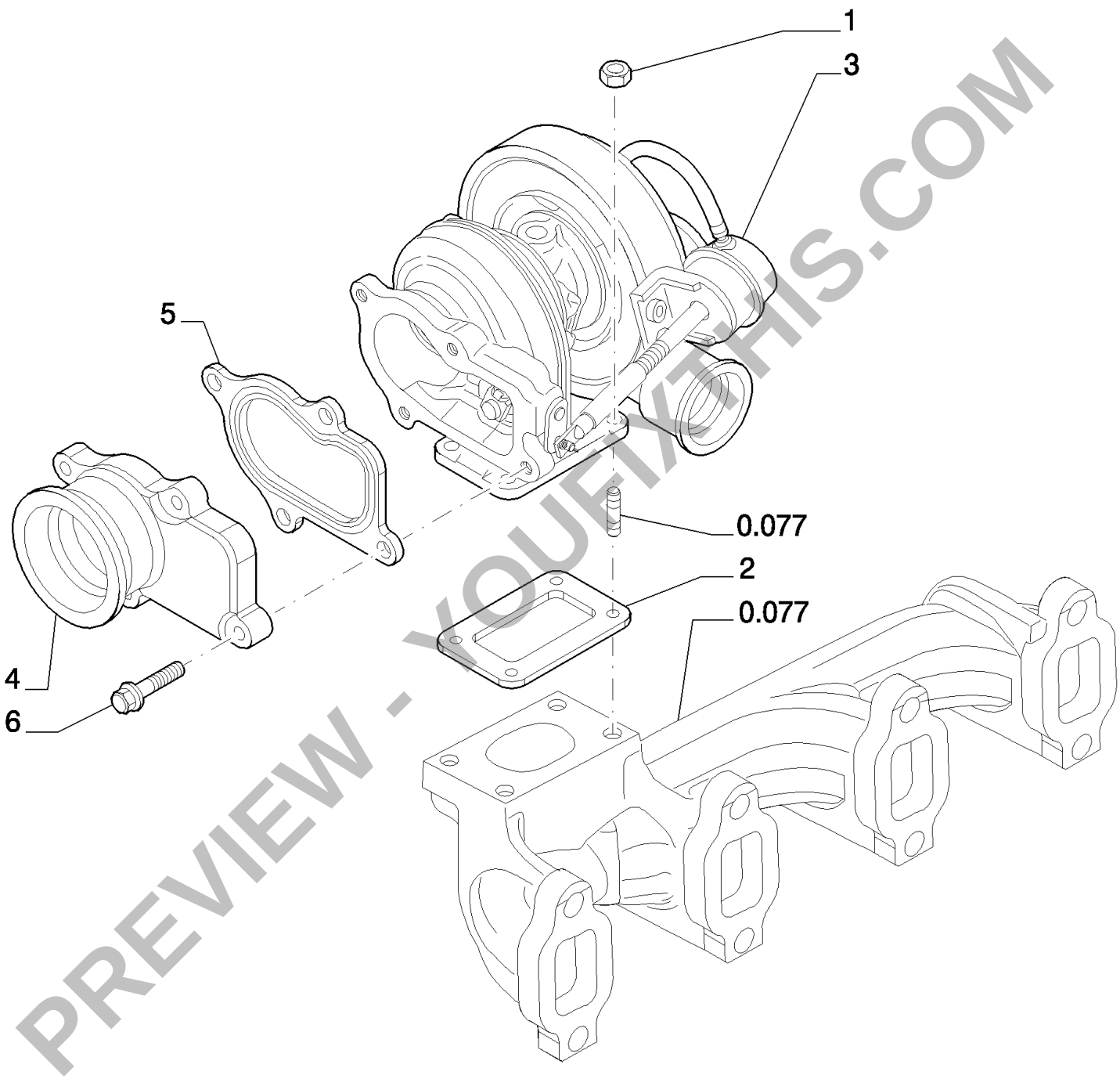

PREVIEW - YOUFIXTHIS.COM

Download full manual at youfixthis.com

1.19.1(01) AIR CLEANER & HOSES

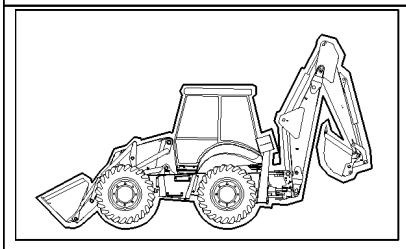

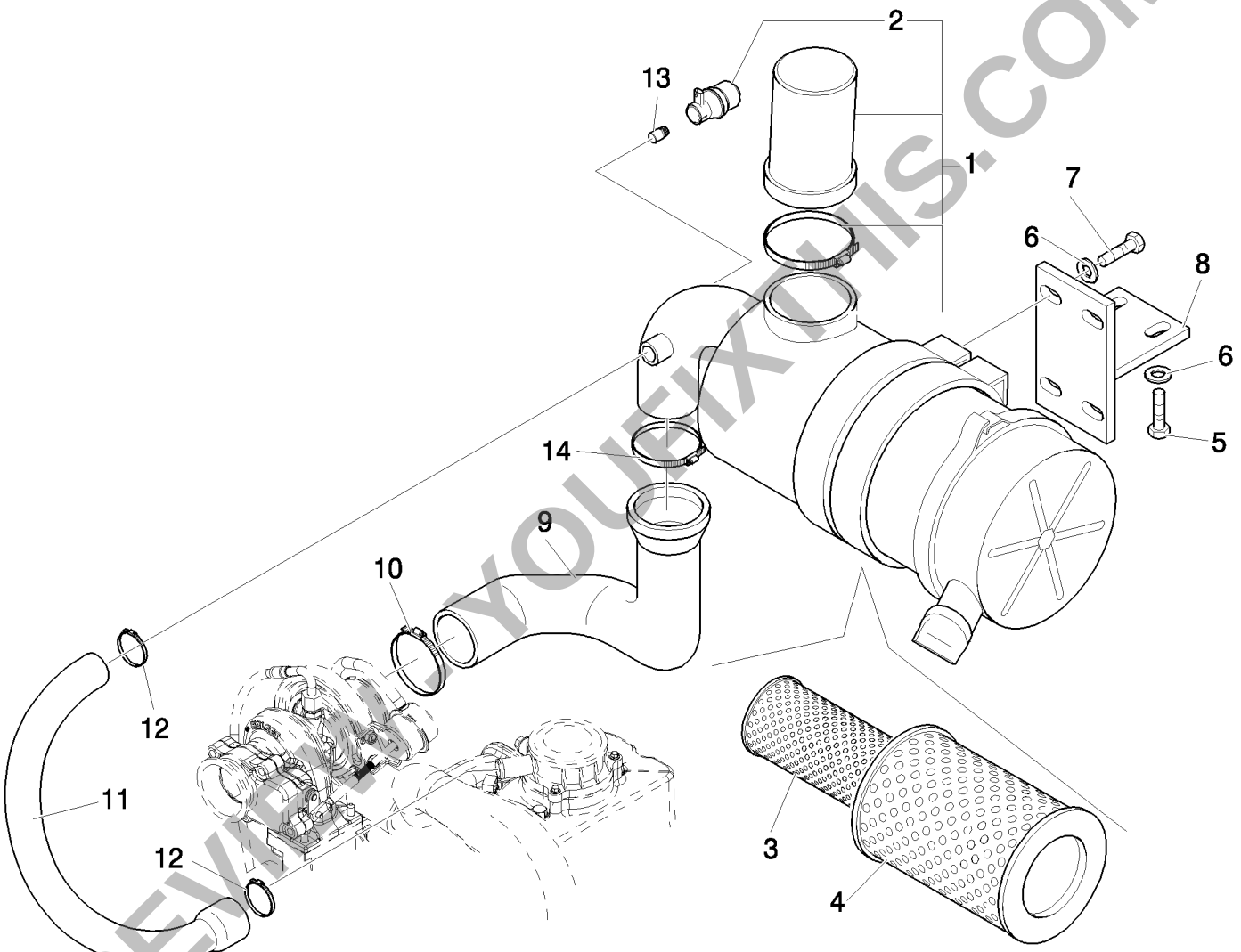

PREVIEW - YOUFIXTHIS.COM

Download full manual at youfixthis.com

1.44.0A(01) REAR AXLE (POWER-SHUTTLE)

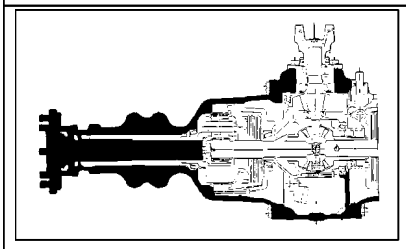

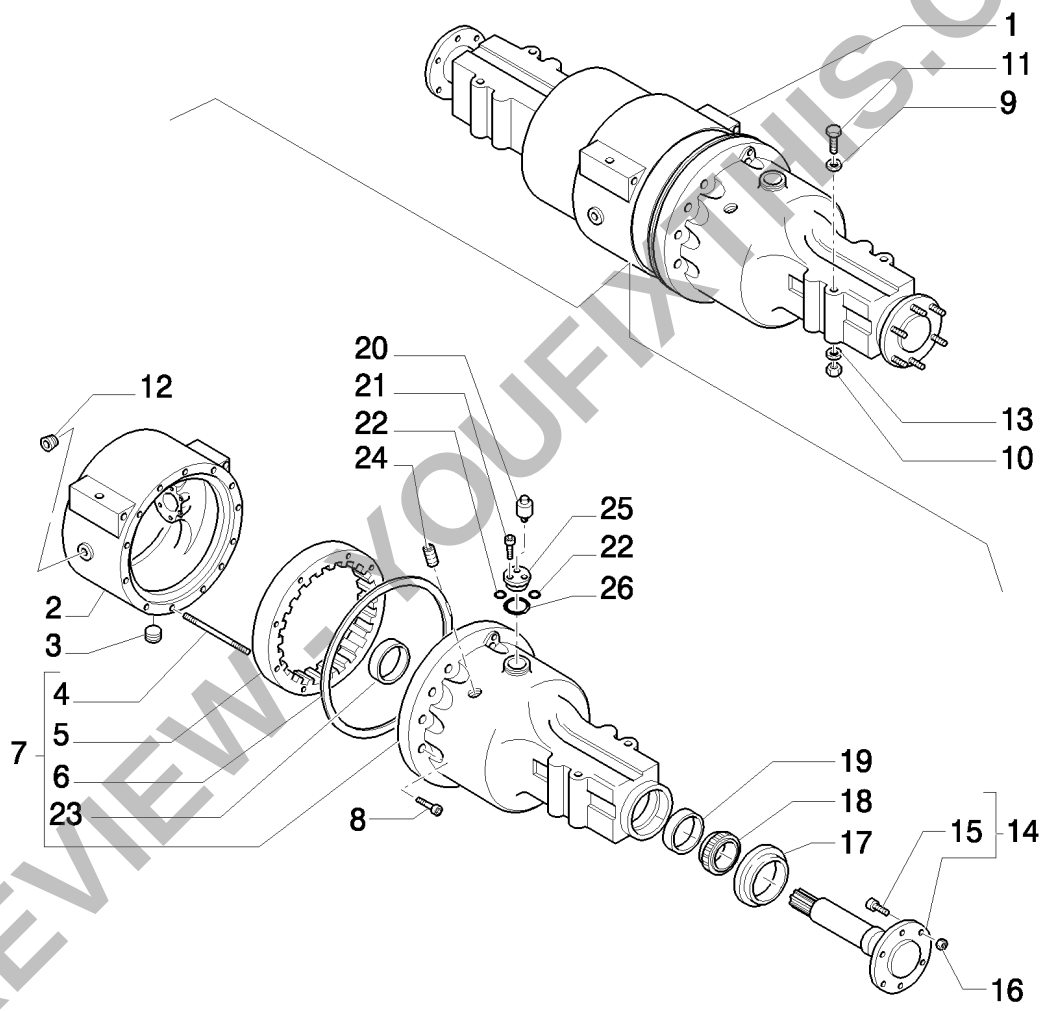

Up To S/N XXX

PREVIEW - YOUFIXTHIS.COM

Download full manual at youfixthis.com

LB90.B EUR BACKHOE LOADER (1/05-) - General

1.82.6(06) HYDRAULIC SYSTEM PIPING

Ref	Part Number	Qty	Description
1	85805840	1	HOSE, FLEXIBLE,
2	85802801	2	CONNECTOR, HYD., 1-11/16"-12 ORS x 1-5/16"-12 SAE O-ring, Includes 6, 8
3	87315438	1	FILTER ASSY, , Includes 4
4	86989733	1	FILTER, HYDRAULIC OIL,
5	11190579	4	WASHER, SPRING, Belleville, M10.5,
6	80167268	2	O-RING,
7	11106221	4	BOLT, Hex, M10 x 25, 8.8, Full Thd,
8	89824051	2	O-RING,
9	85805824	1	VALVE, CHECK,

All version except: LB110.B (Center Pivot, Mechanical)

PREVIEW - YOUFIXTHIS.COM

Download full manual at youfixthis.com

LB90.B EUR BACKHOE LOADER (1/05-) - General

1.88.11/ 5A(02) SELF-LEVELING LINKAGE, LOADER ARM (SIDE SHIFT)

Ref	Part Number	Qty	Description
1	83963433	1	ROD, Assy
2	E662341S72	1	CLEVIS,
3	82879400	1	WASHER,
4	85804026	1	LINK,
5	85801048	1	LOCK, CYLINDER,
6	86507337	1	PIN, HITCH,
7	85803297	1	PIN, 1.515" IDX2.25" OD
8	N663114S36	1	RING, SNAP,
9	85802403	1	PLUG,
10	E7NN194AA	1	SPACER,
11	85804366	1	WASHER,
12	85819179	1	PIN,
13	85700341	1	CIRCLIP,
15	11193274	1	WASHER, SPRING, Belleville, M6.4,
16	85803277	1	PLATE,
17	85817622	1	WASHER, 12 x 24 x 2
18	85817623	1	WASHER, 12 x 24 x 1.5
19	1598734	1	
20	85700130	2	WASHER,
21	85801087	1	PIN,
22	11383634	1	BOLT, Hex, M20 x 1.5 x 50, 10.9, Full Thd,
14	10979424	1	BOLT, Hex, M6 x 10, 8.8, Full Thd,

PREVIEW - YOUFIXTHIS.COM

Download full manual at youfixthis.com

1.91.4/ 2(03) IGNITON SWITCH, POWER POINT, FUSE PANEL & SIDE CONSOLE HARNESS (CAB CP POW

Ref	Part Number	Qty	Description
1	87318748	1	HARNESS, , See Page 1.91.4/2.01, 1.91.4/2.02, 1.91.4/2.04, 1.91.4/2.05
2	87318749	1	HARNESS, WIRE, , See Page 1.91.4/2.01, 1.91.4/2.02, 1.91.4/2.04, 1.91.4/2.05
3	85821410	1	BLOCK,
4	85804675	2	KEY, IGNITION,
5	87431469	1	SWITCH, IGNITION,

PREVIEW - YOUFIXTHIS.COM

Download full manual at youfixthis.com

1.92.8(01) FIREWALL SEAL, ROPS

Ref	Part Number	Qty	Description
1	85805571	1	GASKET,

PREVIEW - YOUFIXTHIS.COM

Download full manual at youfixthis.com

1.94.2(04) AIR DUCTS & VENTS

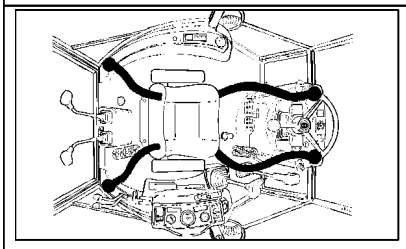

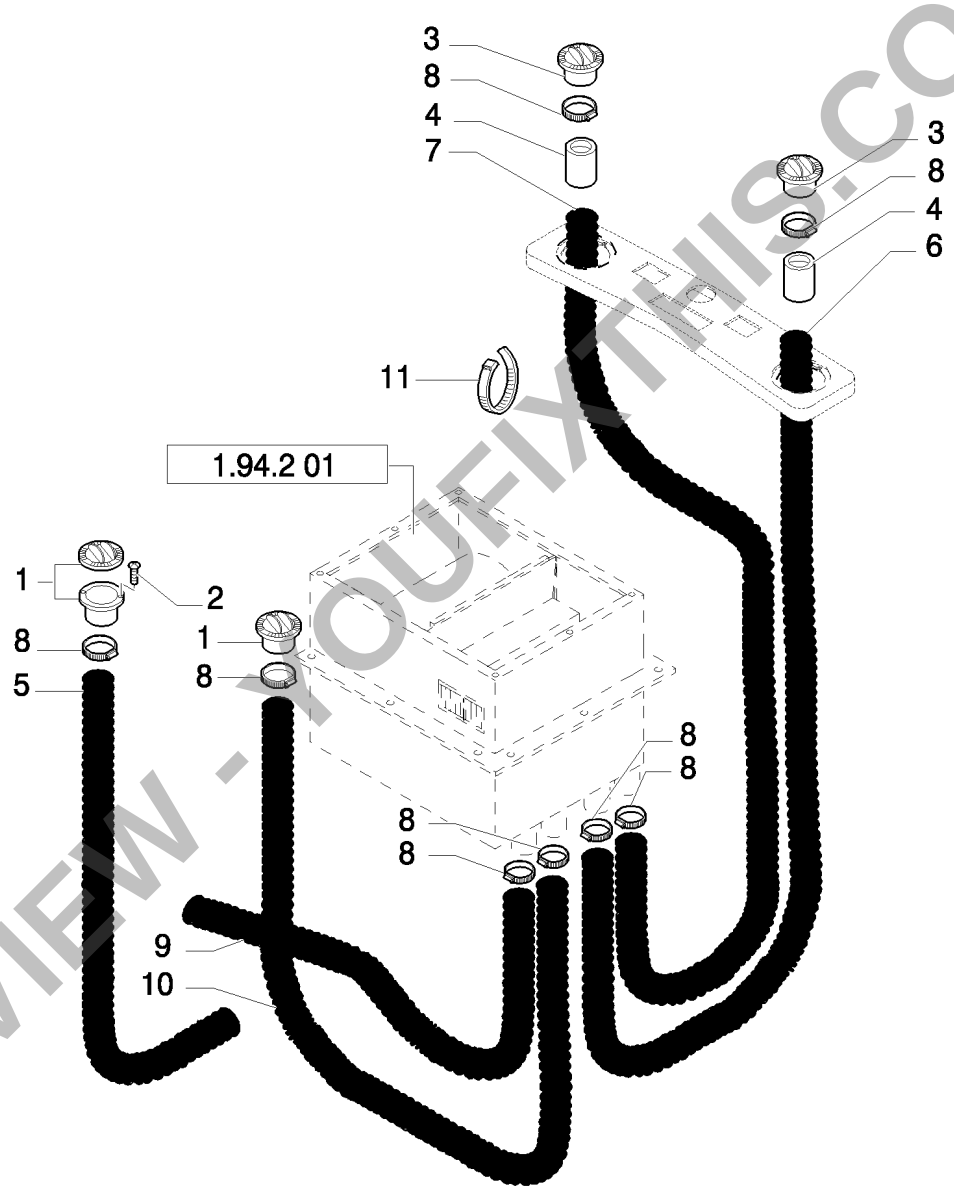

Mechanical Version, Up To S/N XXX

PREVIEW - YOUFIXTHIS.COM

Download full manual at youfixthis.com

1.96.7/ 5(01) ROPS PLUGS & FLOOR PLATE (SIDE SHIFT)

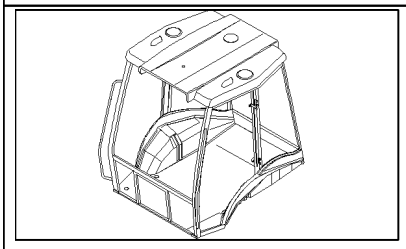

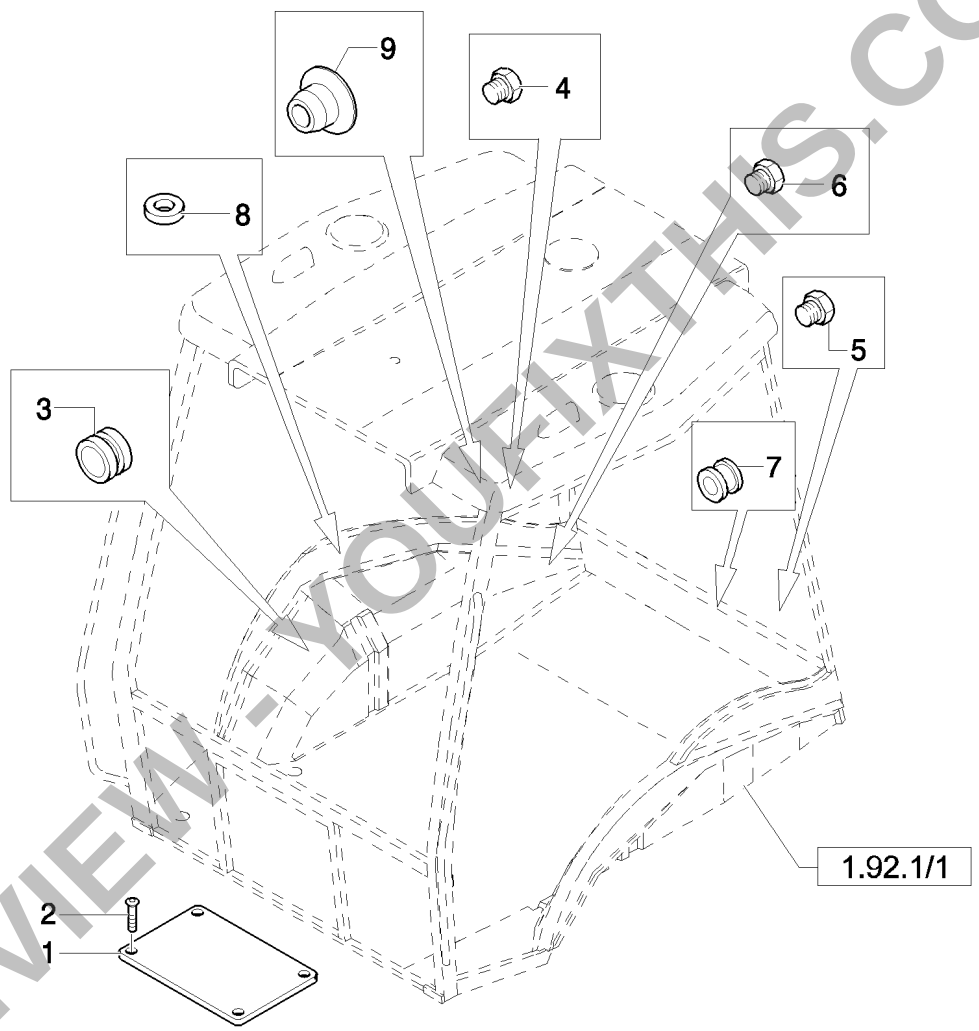

Mechanical Version

PREVIEW - YOUFIXTHIS.COM

Download full manual at youfixthis.com

130(02) APPROVAL FOR EUROPE

Ref	Part Number	Qty	Description
1	85803296	1	SUPPORT,
2	11193879	2	WASHER, SPRING, Belleville, M8.4,
3	16100811	2	NUT, M8, Cl 8,
4	12574111	2	NUT, LOCK, M5 x .8, Cl 8,
5	12637811	2	WASHER,
6	10977821	2	BOLT, Hex, M5 x 16, 8.8, Full Thd,
7	85803533	1	LAMP, NUMBER PLATE,
8	12647121	1	WASHER, M8 x 20 x 3,
9	85803543	1	PIN,
10	85803332	2	STRAP, CABLE, M4.8 x 180,
11	85803522	1	, Includes 1, 4 To 7
12	87318560	1	HARNESS, WIRE,

Pilot Control Version

PREVIEW - YOUFIXTHIS.COM

Download full manual at youfixthis.com

LB90.B EUR BACKHOE LOADER (1/05-) - General

302(01) TWO-SECTION CONTROL VALVE FOR LOADER

Ref	Part Number	Qty	Description
1	85825188	1	VALVE, CONTROL, ASSY
2	85825468	1	VALVE SECTION, HYD, ASSY, See Page 302 02
3	87558567	1	SECTOR, , See Page 302 03, LOADER
4	85825469	1	VALVE SECTION, HYD, , Bucket, See Page 302 04
5	85826924	1	SECTOR, TOOTHED, ASSY
6	85825475	1	TIE-ROD, THREADED, TIE RODS
7	85825473	3	KIT, SEALS, Seal
8	11234721	3	BOLT, Hex, M10 x 1.25 x 45, 8.8,
9	13578621	3	WASHER, 10x30x2
10	11190679	3	WASHER, SPRING, Belleville, M10.5,
11	85805813	1	LEVER, , Only for LB90.B - LB95.B - LB110.B
11	87304793	1	LEVER, , Only for LB110.B - LB115.B
12	85804346	1	DECAL,
13	87304800	1	JOYSTICK, , Only for LB90.B - LB95.B - LB110.B
13	87304799	1	JOYSTICK, , Only for LB110.B - LB115.B
13	87311302	1	HANDLE GRIP, , Only for POWER SHIFT
13	87311306	1	HANDLE GRIP, , Only for POWER SHUTTLE
14	87311303	1	HUB,
15	13789621	2	SET SCREW, Hex Soc, M8 x 10, Flat Pt,
16	87311836	1	HARNESS, WIRE,
16	87311838	1	HARNESS, WIRE, Includes Switch
17	87304799	1	JOYSTICK,
17	87311102	1	JOYSTICK, , Only for POWER SHIFT
17	87311103	1	JOYSTICK, , Only for POWER SHUTTLE

PREVIEW - YOUFIXTHIS.COM

Download full manual at youfixthis.com

332(07) BACKHOE CONTROL VALVE, 6 SECTIONS (SIDE SHIFT) EUROPE

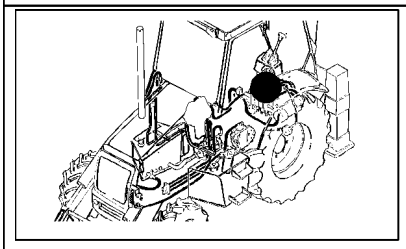

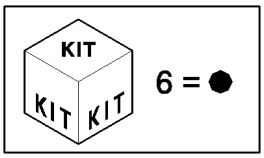

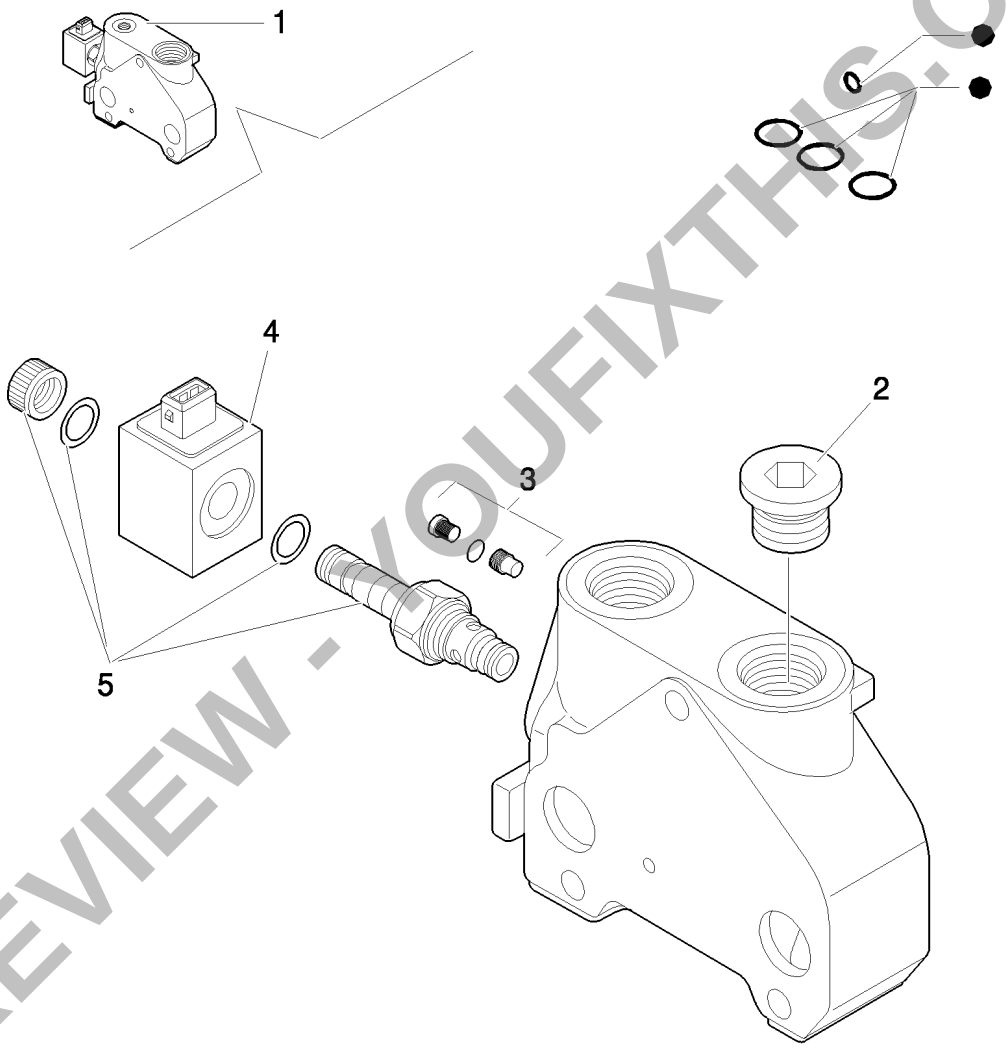

PREVIEW - YOUFIXTHIS.COM

Pilot Control Version

Download full manual at youfixthis.com

341/ B(01) 8 SECTION PILOT CONTROL VALVE SUPPORT,COMPLETE

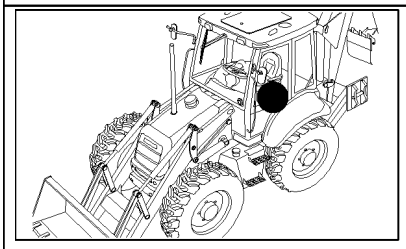

PREVIEW - YOUFIXTHIS.COM

Pilot Control Version

Download full manual at youfixthis.com

353(02) 4 LEVER BACKHOE CONTROLS, UPPER TIE-ROD ASSEMBLY

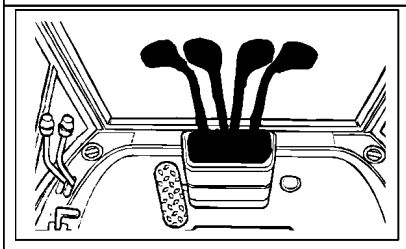

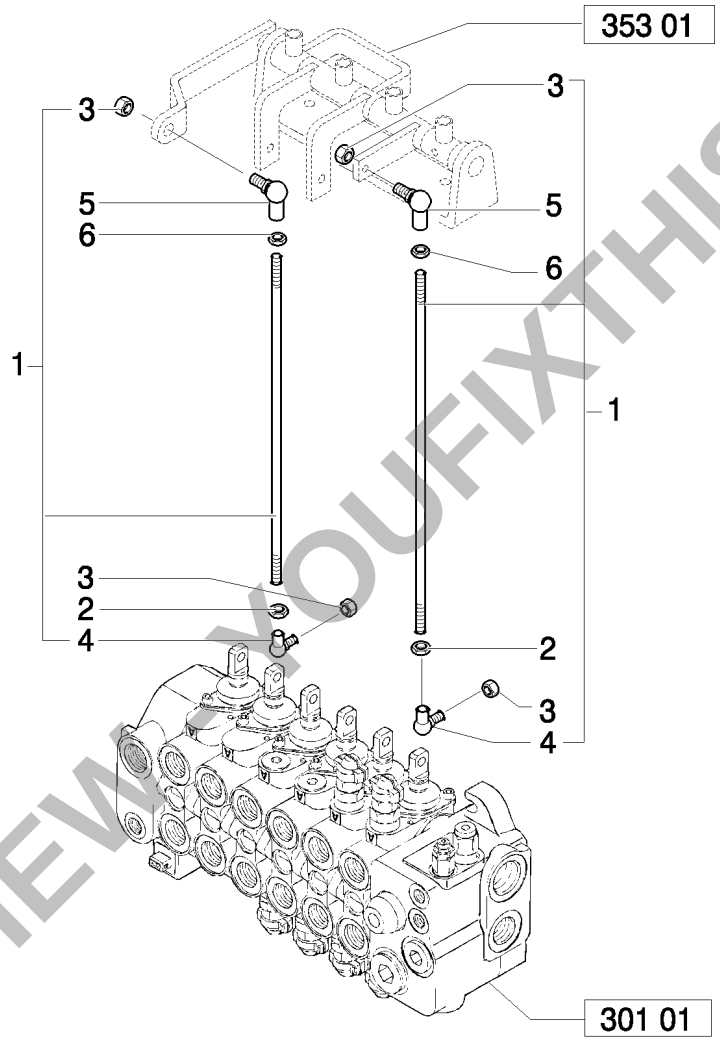

PREVIEW - YOUFIXTHIS.COM

Mechanical Version

Download full manual at youfixthis.com

394/ 1(01) 4 LEVER BACKHOE CONTROLS, CONSOLE, LEVERS & BELLCRANK (CENTER PIVOT)

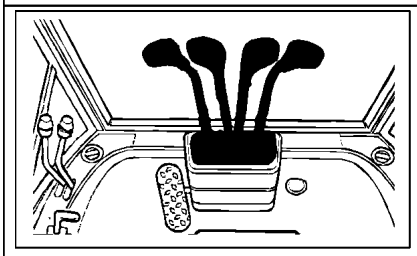

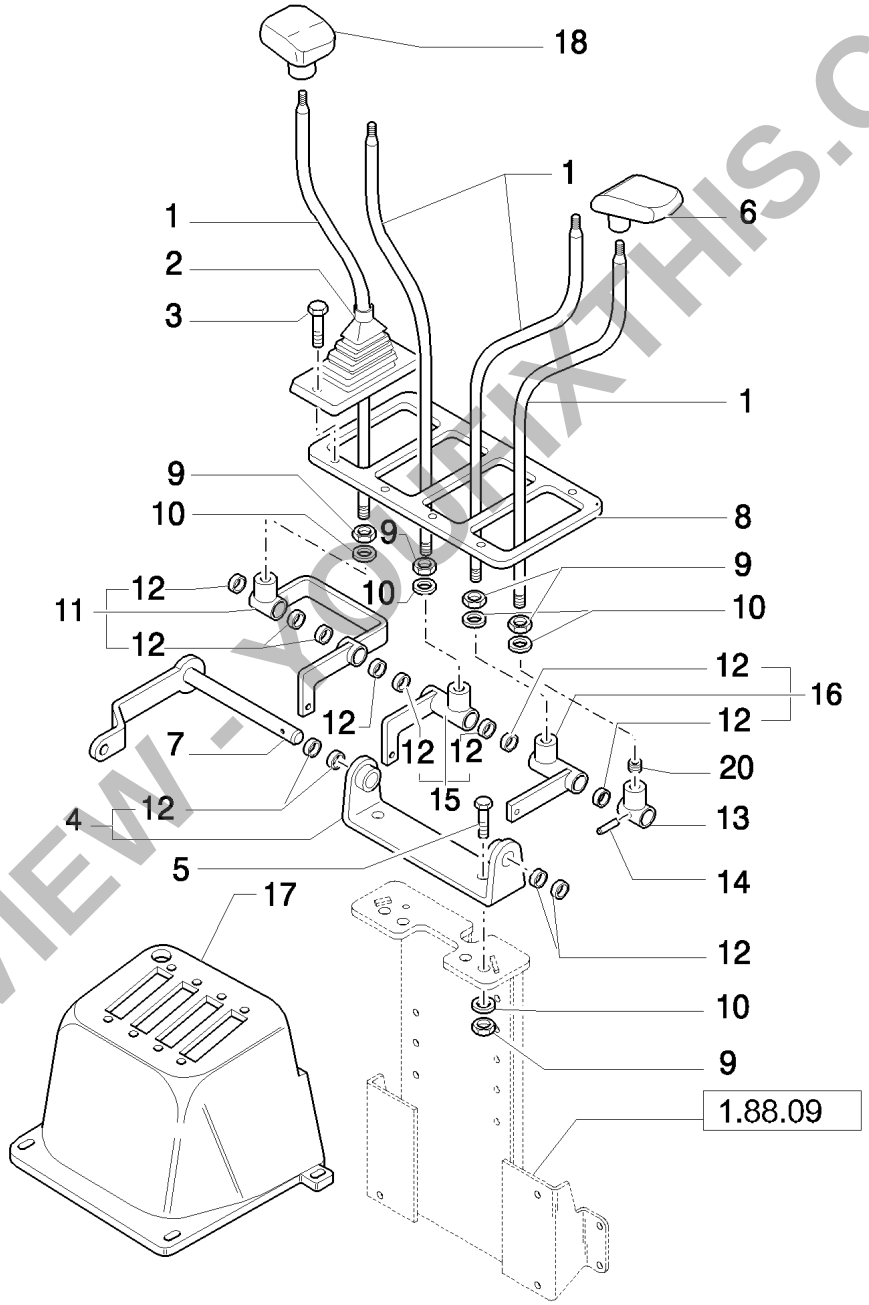

PREVIEW - YOUFIXTHIS.COM

Mechanical Version

Download full manual at youfixthis.com

471/ 2(01) BUCKET 4X1 (1 M3) WITH BLADE "COMMON GREY"

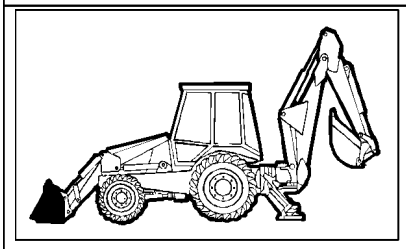

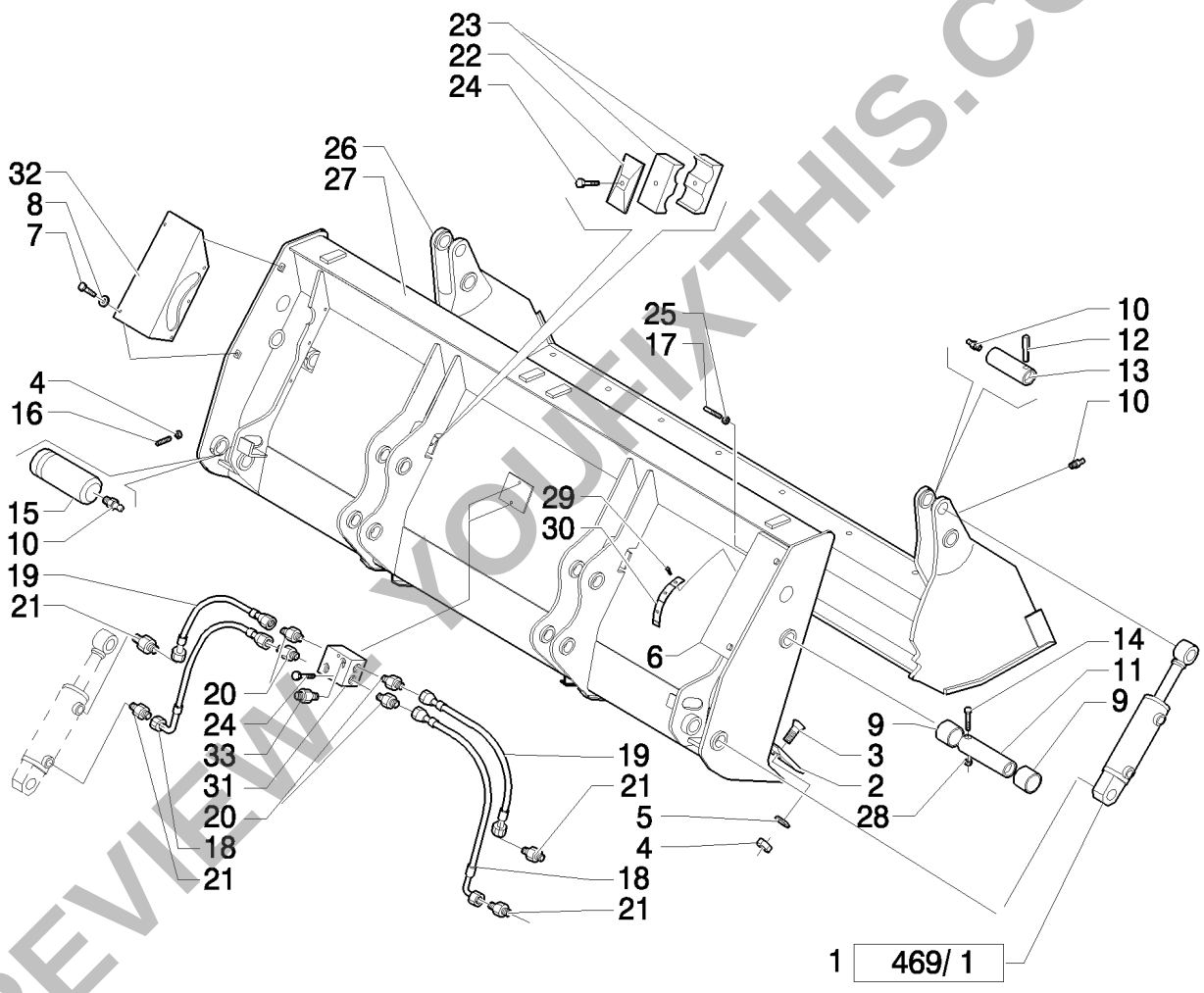

PREVIEW YOUFIXTHIS.COM

Download full manual at youfixthis.com

515(01) 12" (305MM) BACKHOE BUCKET WITH PIN TEETH

Ref	Part Number	Qty	Description
1	85801097	3	PIN,
2	85811432	3	TOOTH, BUCKET,
3	D7NNC584A	6	BUSHING,
4	85801098	3	RING,
5	85821788	3	SHANK, BUCKET TOOTH,
6	NSS	3	NOT SERVICED SEPARATELY, , Includes 1 To 5

PREVIEW - YOUFIXTHIS.COM

Download full manual at youfixthis.com

LB90.B EUR BACKHOE LOADER (1/05-) - General

532(01) PIN TOOTH KIT, 30" (762MM) BACKHOE BUCKET

Ref	Part Number	Qty	Description
1	85801097	5	PIN,
2	85811432	5	TOOTH, BUCKET,
3	85801098	5	RING,

PREVIEW - YOUFIXTHIS.COM

Download full manual at youfixthis.com

Ref	Part Number	Qty	Description
1	86992395	1	MOTOR, STARTER,
2	86511845	1	BOLT, Hex Flg, M10 x 35, 8.8,

PREVIEW - YOUFIXTHIS.COM

Download full manual at youfixthis.com

646/1(01) MACHINE PART AIR CONDITIONING SET

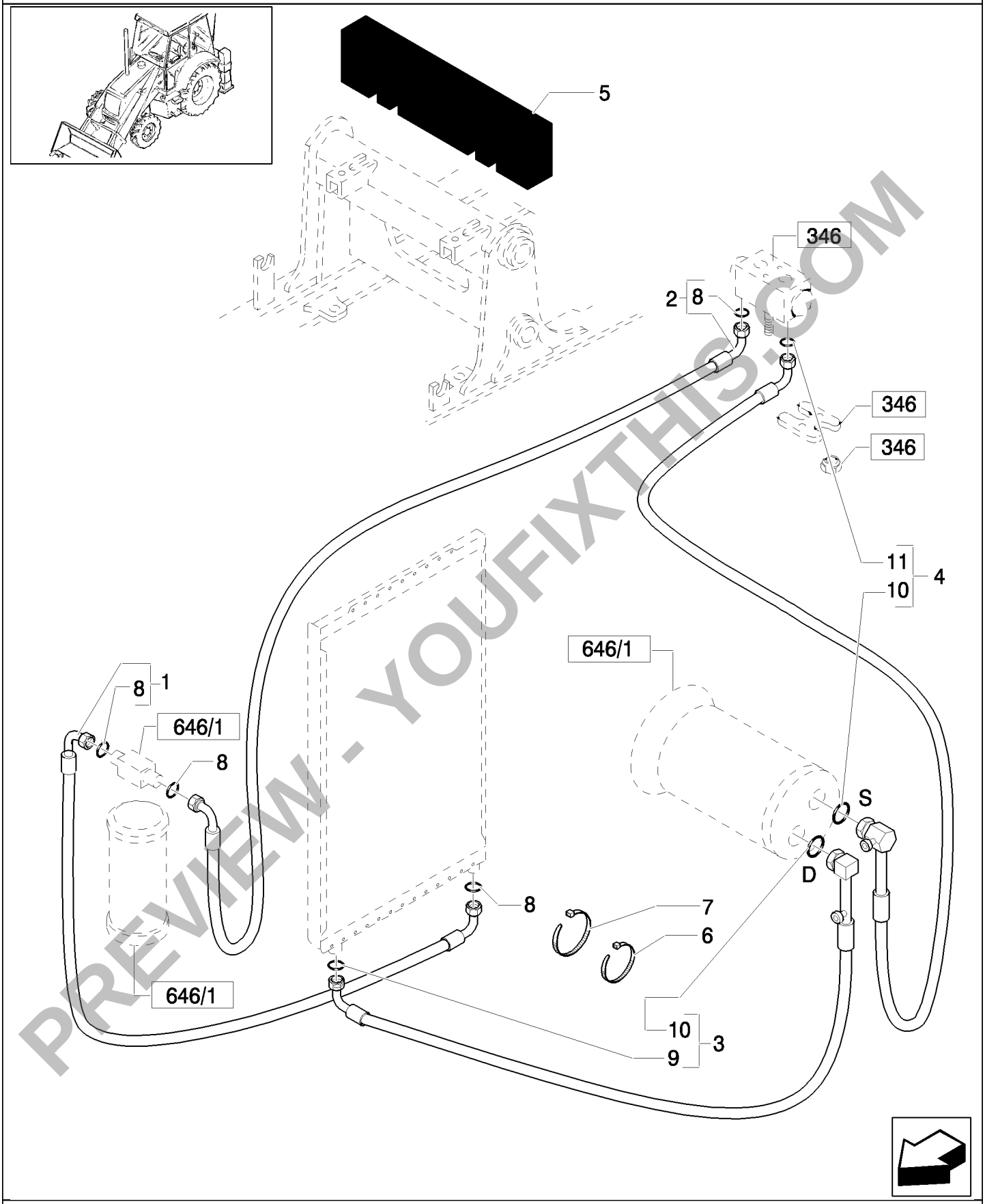

PREVIEW - YOUFIXTHIS.COM

From To S/N XXX

Download full manual at youfixthis.com

724/ 1(01) HYDRAULIC SYSTEM FOR HAMMER (SIDE SHIFT)

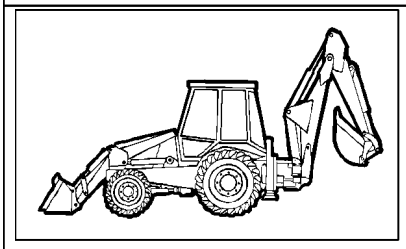

Mechanical Version

PREVIEW - YOUFIXTHIS.COM

Download full manual at youfixthis.com

803(01) FENDERS, FRONT

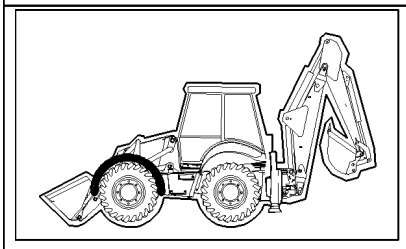

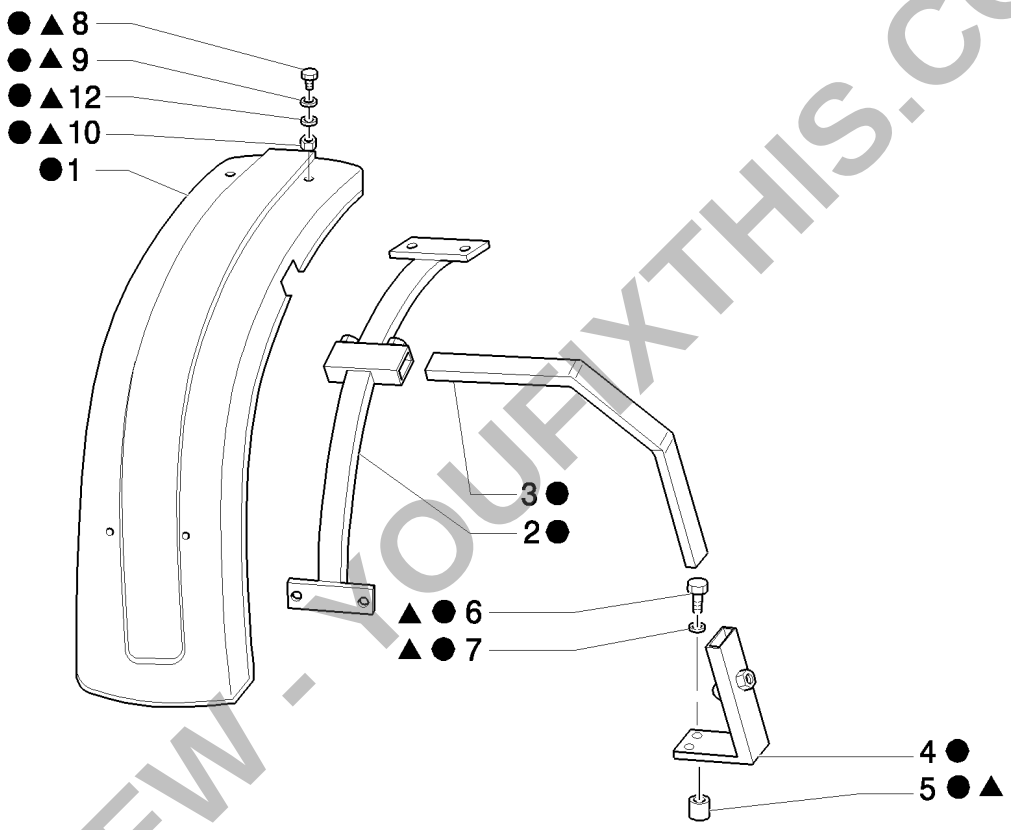

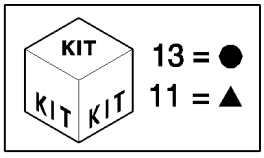

PREVIEW - YOUFIXTHIS.COM

Download full manual at youfixthis.com

855/ 3(03) AIR RIDE CLOTH SEAT UPPER SUSPENSION PARTS

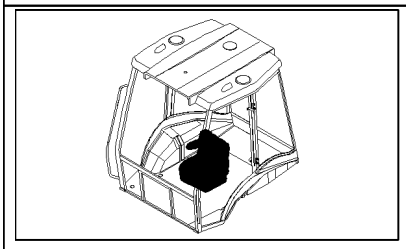

KIT 1 = ●

2 SEE ALSO TAV. 855/ 3 04
SEE ALSO TAV. 855/ 3 05

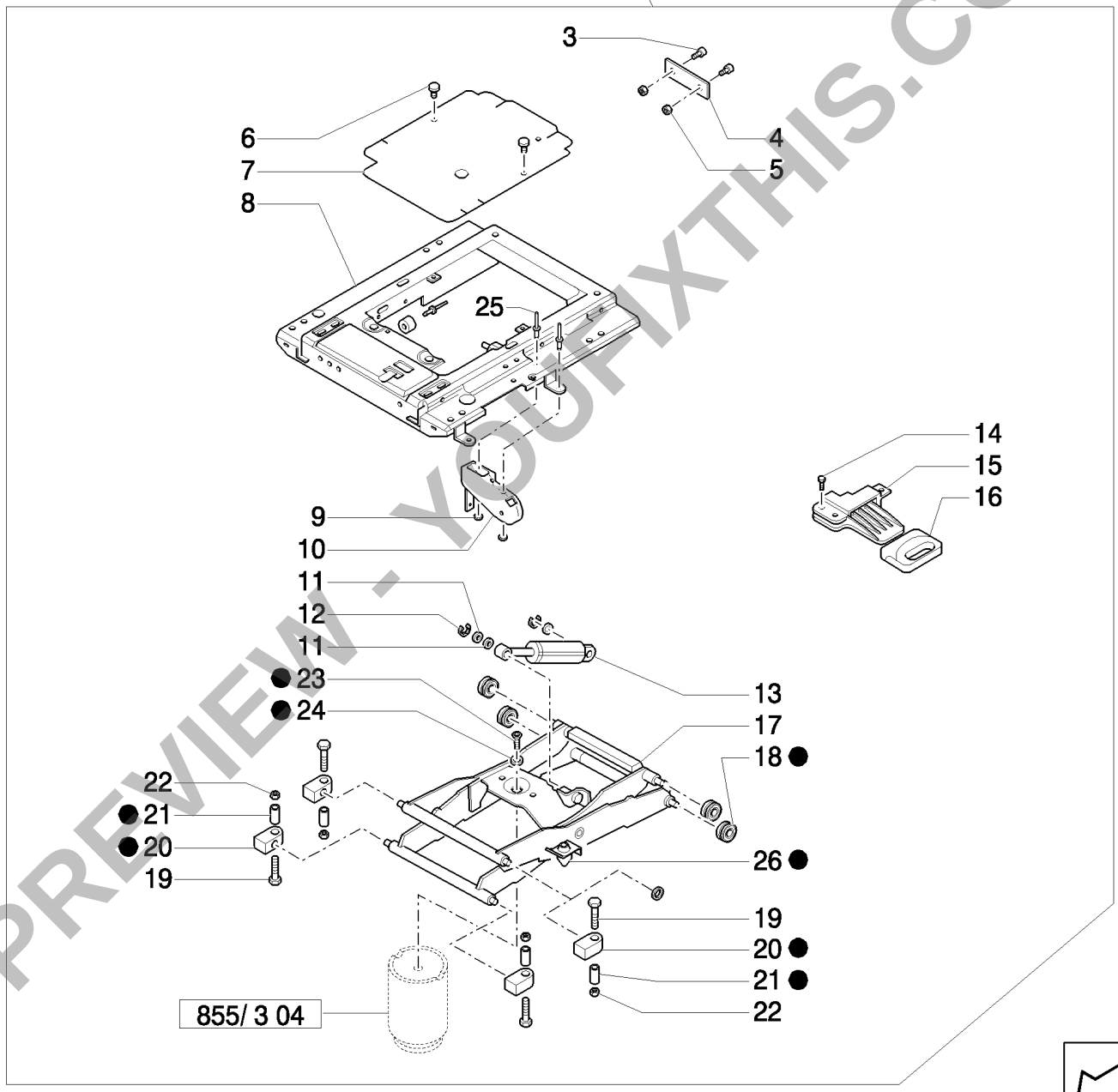

PREVIEW - YOUFIXTHIS.COM

Download full manual at youfixthis.com

PREVIEW ONLY

You're viewing 25 of 1251 pages

The full manual includes:

- All 1251 pages, complete
- Searchable PDF (find any keyword)
- No watermarks
- Instant download
- Print-ready quality

GET FULL MANUAL NOW

New Holland LB90.B Parts Catalog

Scan or click anywhere
youfixthis.com

Click anywhere on this page to get the full manual