SERVICE MANUAL

LM6.32 / LM6.35 / LM7.35 / LM7.42 / LM7.42 CL / LM9.35

Tier 4B (final)

Telescopic Handler

FIXTHIS.COM

Part number 51425741
1st edition English
March 2018

NEW HOLLAND AGRICULTURE

Hexagonal screws (without nut) and round head bolts – class 5.6 and higher

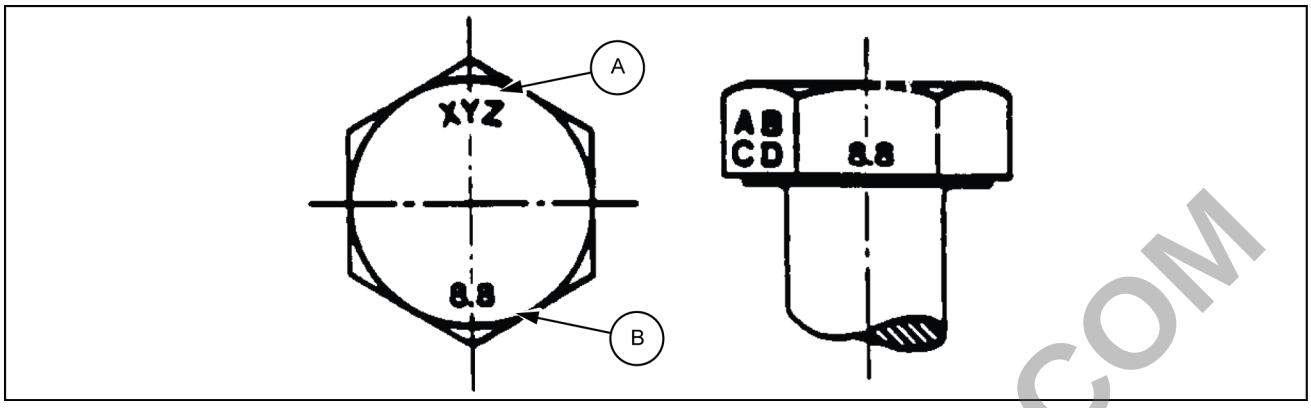

LEIL14THL0992EB 2

A. Identification of manufacturer
B. Commercial class

Hexagonal nuts and lock nuts – class 05 and higher

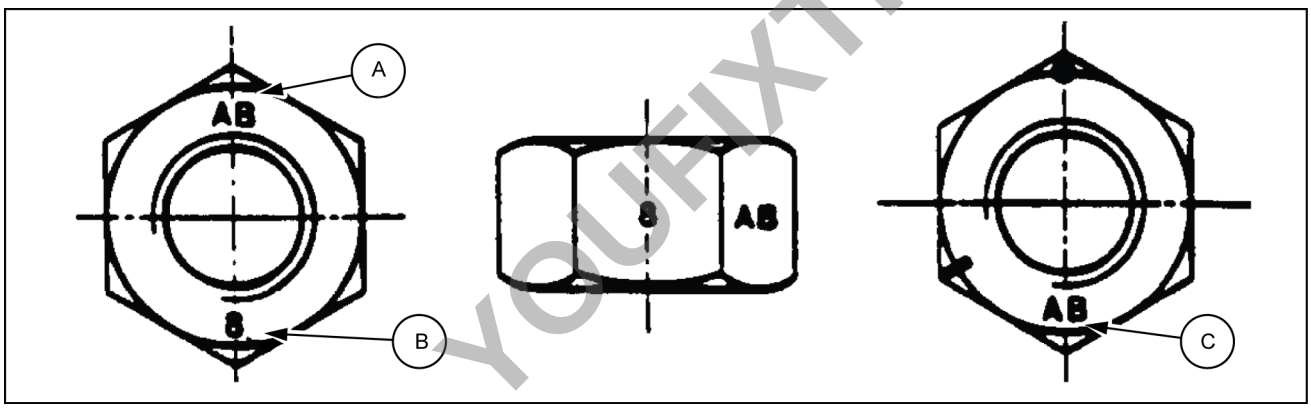

LEIL14THL0993EB 3

A. Identification of manufacturer
B. Commercial class
C. Marking

PREVIEW - YOUFIXTHIS.COM

Download full manual at youfixthis.com

5. Remove the drain plug of the hydraulic tank.
   Drain the hydraulic oil from the hydraulic tank. Collect the escaping fluid in a proper container.

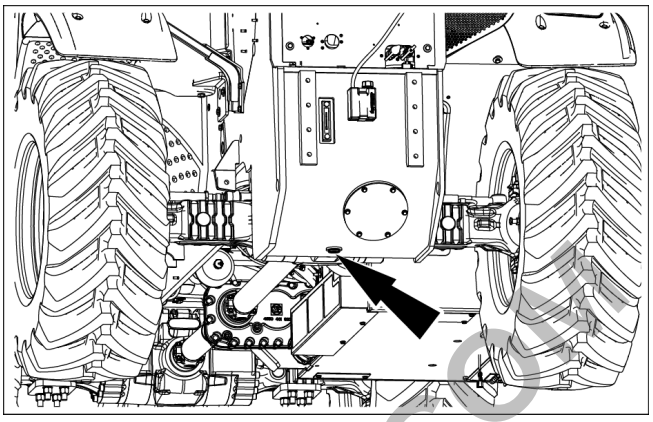

LEIL17TLH1253AB 2

6. Remove the drain plug of the fuel tank.
   Drain the fuel tank. Collect the escaping fluid in a proper container.

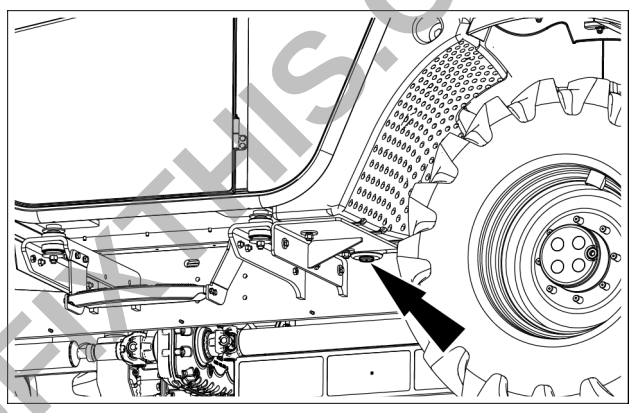

LEIL17TLH1255AB 3

7. If equipped, remove the drive shaft cover guard **(1)**.

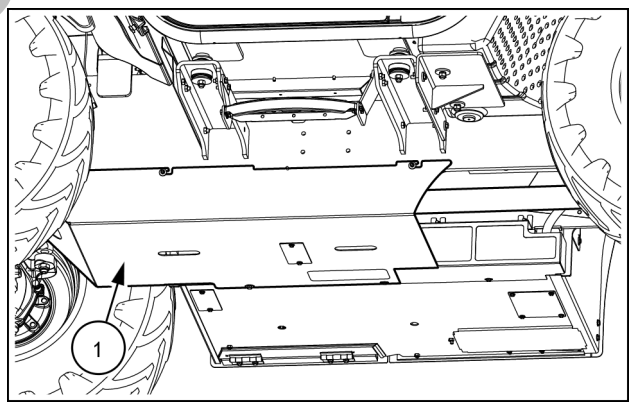

LEIL17TLH1254AA 4

8. Remove the retaining bolts **(2)** and the nuts **(3)** that fix the cover **(1)** to the frame lower side and to the engine compartment.
9. Remove the cover **(1)** from the bottom side of the machine.

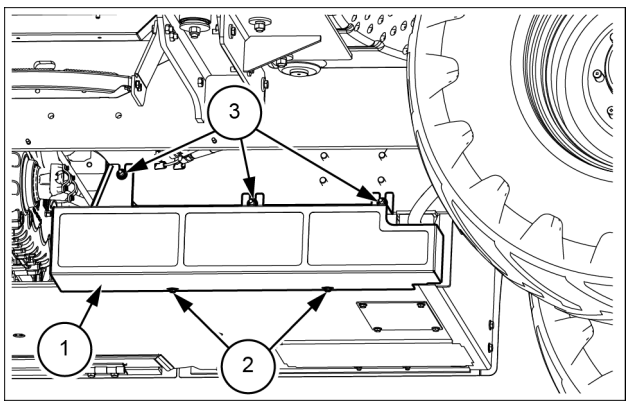

LEIL17TLH1178AB 5

PREVIEW - YOUFIXTHIS.COM

Download full manual at youfixthis.com

Locking screw and oil draining plug

Tighten all the locking screws **M10 x 1**, fitted with O-ring, to **6 N·m** (**4.4 lb ft**).
For the positions of the screws, see the arrows in figures.

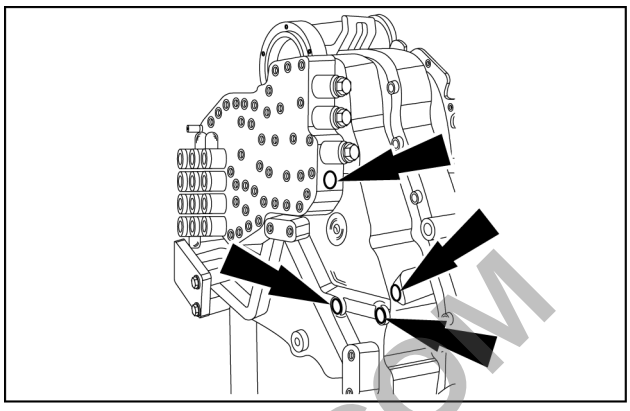

LEIL13TLH1322AB 1

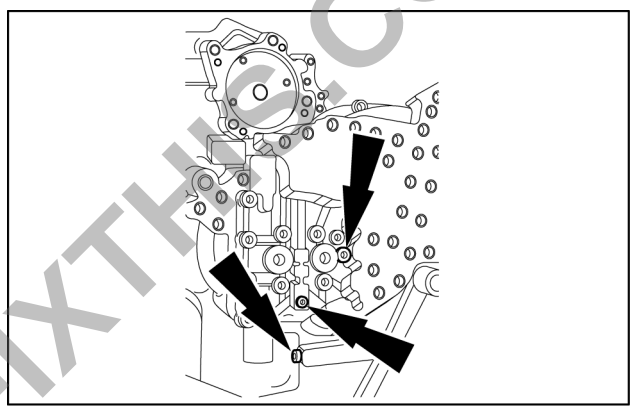

LEIL13TLH1323AB 2

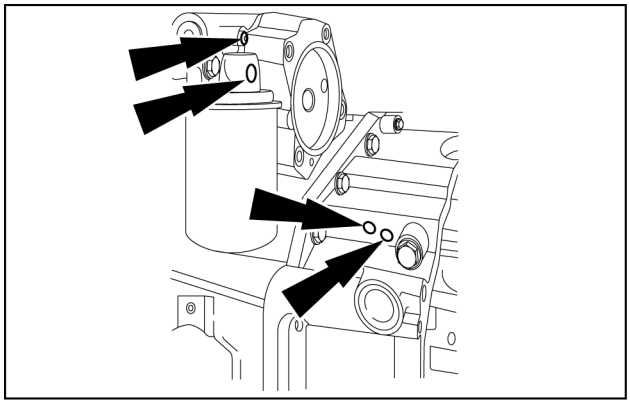

LEIL13TLH1324AB 3

Tighten the screw 7/8”-14 UN 2A, fitted with O-ring, to **30 N·m** (**22.1 lb ft**).

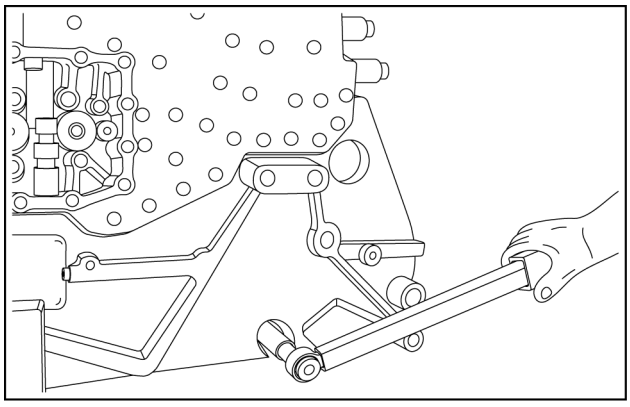

LEIL13TLH1325AA 4

PREVIEW - YOUFIXTHIS.COM

Download full manual at youfixthis.com

Front drive shaft - Component identification

LM 6.32 TELEHANDLER LM 6.32	NA
LM 6.35 TELEHANDLER LM 6.35 ELITE	NA
LM 7.35 TELEHANDLER LM 7.35	NA
LM 7.42 TELEHANDLER LM 7.42 CL	NA
LM 7.42 TELAHANDLER LM 7.42 ELITE	NA
LM9.35 TELEHANDLER LM 9.35	NA

A. Front drive shaft
B. Spider
C. Greasing point for sleeve shaft spline

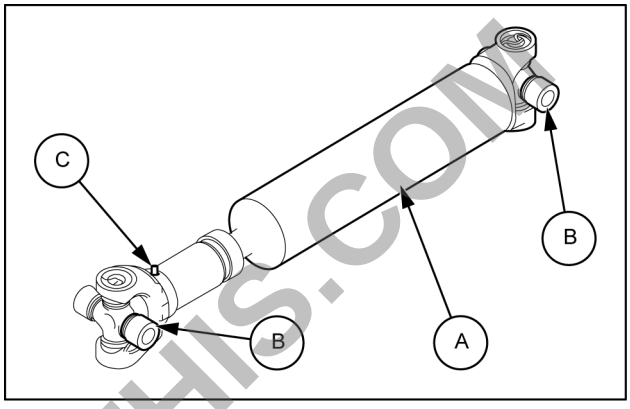

LEIL14TLH1141AB 1

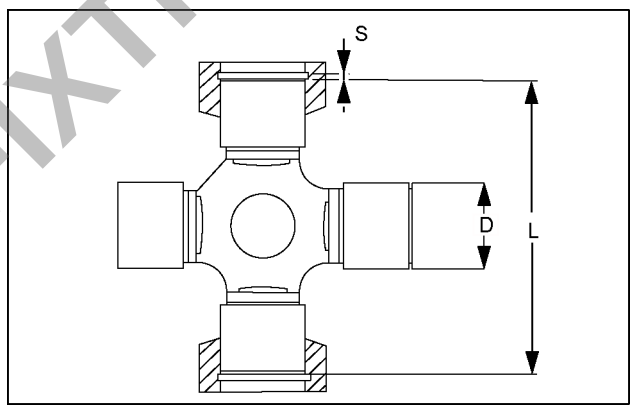

LEIL14TLH1146AA 2

PREVIEW - YOUFIXTHIS.COM

Download full manual at youfixthis.com

Powered front axle - Service instruction

LM 6.32 TELEHANDLER LM 6.32	NA
LM 6.35 TELEHANDLER LM 6.35 ELITE	NA
LM 7.35 TELEHANDLER LM 7.35	NA
LM 7.42 TELEHANDLER LM 7.42 CL	NA
LM 7.42 TELAHANDLER LM 7.42 ELITE	NA
LM9.35 TELEHANDLER LM 9.35	NA

Axle oil change

NOTICE: *to drain and fill the oil and to check the oil level the axle must be horizontal and installed on the vehicle.*

Clean with care the breather **(3)** and the surrounding area.

NOTICE: *risk of violent oil ejection, follow carefully all the safety procedures indicated in this manual and in the Operator manual.*

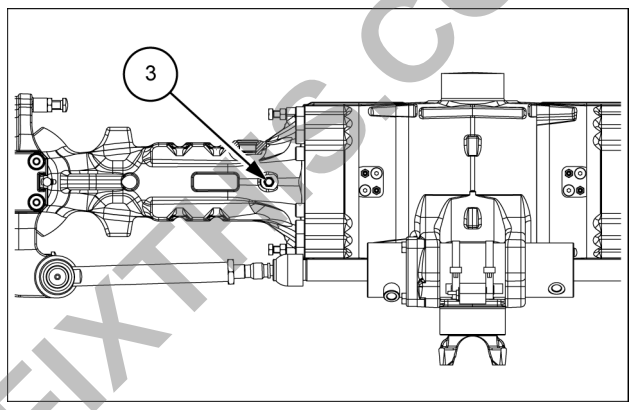

LEIL17TLH1007AB 1

To drain the oil unscrew and remove first the fill plug **(1)** then the drain plug **(2)**.
Drain all oil. Clean with care and assemble the plug **(2)**.
Tighten the plug to **60 N·m** (**44.3 lb ft**).

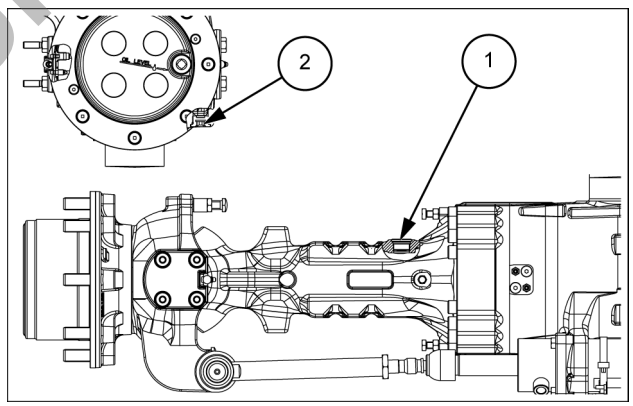

LEIL17TLH1008AB 2

Fill to the bottom of the fill plug hole **(1)** with the specified oil (refer to “Consumables” in the “Introduction section of this manual). Wait to allow the oil to flow through the axle.
Check oil level and fill to the specified level if necessary.
Clean with care and assemble the plug **(1)**.
Tighten the plug to **60 N·m** (**44.3 lb ft**).

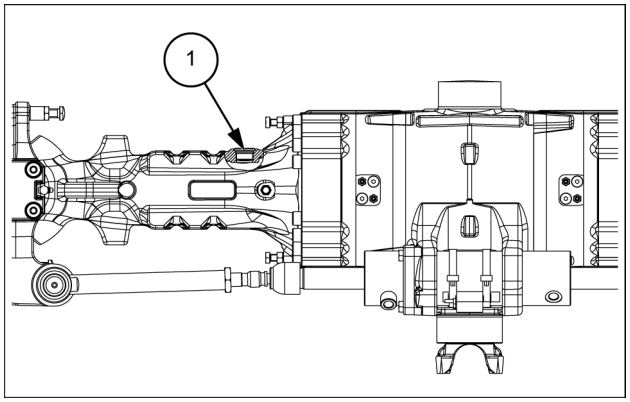

LEIL17TLH1009AB 3

PREVIEW - YOUFIXTHIS.COM

Download full manual at youfixthis.com

Powered rear axle - Service instruction

LM 6.32 TELEHANDLER LM 6.32	NA
LM 6.35 TELEHANDLER LM 6.35 ELITE	NA
LM 7.35 TELEHANDLER LM 7.35	NA
LM 7.42 TELEHANDLER LM 7.42 CL	NA
LM 7.42 TELAHANDLER LM 7.42 ELITE	NA
LM9.35 TELEHANDLER LM 9.35	NA

Axle oil change

NOTICE: *to drain and fill the oil and to check the oil level the axle must be horizontal and installed on the vehicle.*

Clean with care the breather **(3)** and the surrounding area.

NOTICE: *risk of violent oil ejection, follow carefully all the safety procedures indicated in this manual and in the Operator manual.*

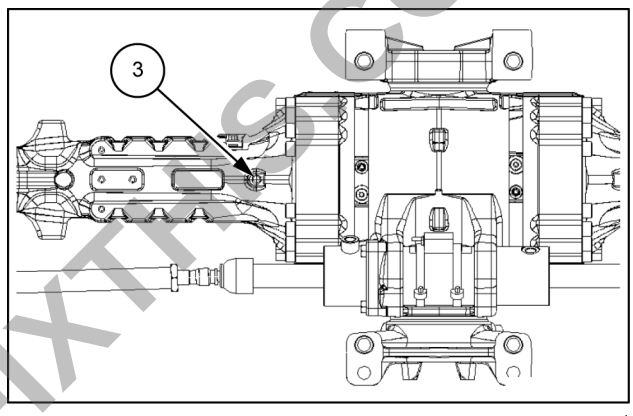

LEIL13TLH0607AB 1

To drain the oil unscrew and remove first the fill plug **(1)** then the drain plug **(2)**.
Drain all oil. Clean with care and assemble the plug **(2)**.
Tighten the plug to **60 N·m** (**44.3 lb ft**).

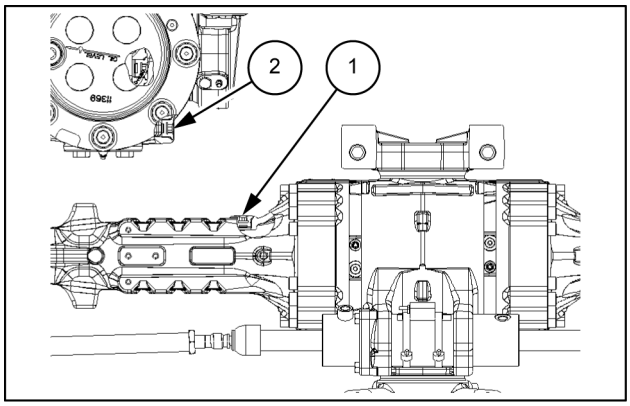

LEIL13TLH0608AB 2

Fill to the bottom of the fill plug hole **(1)** with the specified oil (refer to “Consumables” in the “Introduction” section of this manual). Wait to allow the oil to flow through the axle.
Check oil level and fill to the specified level if necessary.
Clean with care and assemble the plug **(1)**.
Tighten the plug to **60 N·m** (**44.3 lb ft**).

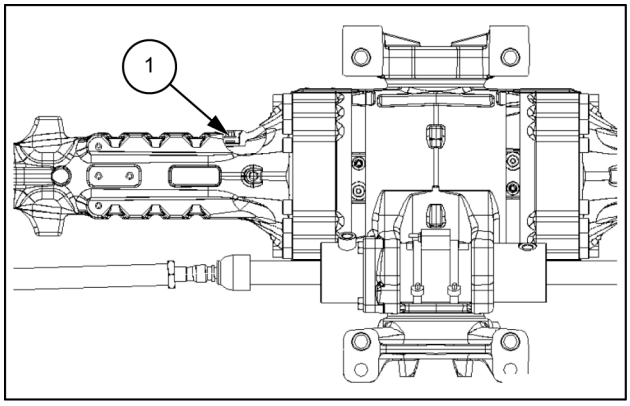

LEIL13TLH0609AB 3

PREVIEW - YOUFIXTHIS.COM

Download full manual at youfixthis.com

Hydraulic service brakes - Disassemble

LM 6.32 TELEHANDLER LM 6.32	NA
LM 6.35 TELEHANDLER LM 6.35 ELITE	NA
LM 7.35 TELEHANDLER LM 7.35	NA
LM 7.42 TELEHANDLER LM 7.42 CL	NA
LM 7.42 TELAHANDLER LM 7.42 ELITE	NA
LM9.35 TELEHANDLER LM 9.35	NA

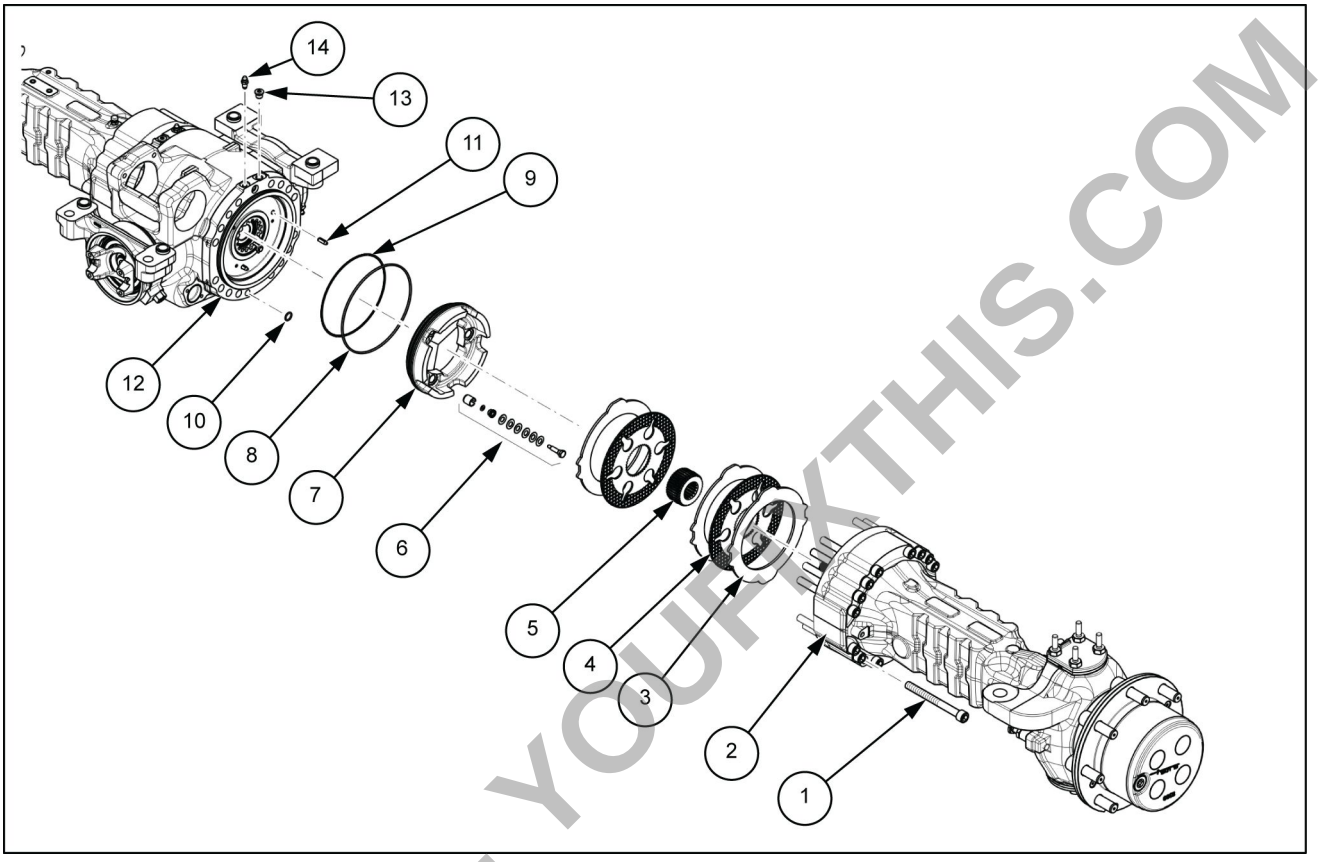

LEIL13TLH0773FB 1

Some of the following pictures may not show exactly your axle, but the indicated operations are correct anyway.

Unscrew the bolts **(1)** and remove the axle housing **(2)**.

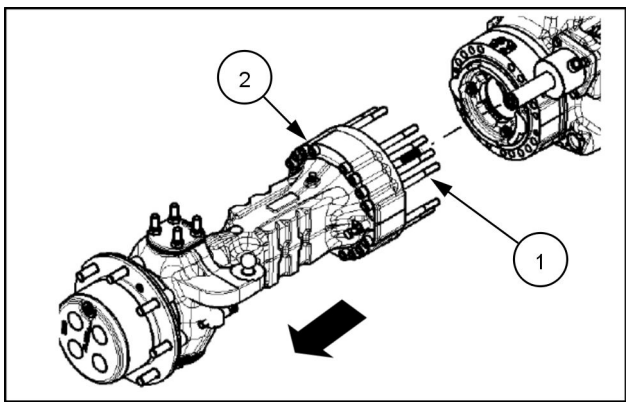

LEIL13TLH0774AB 2

PREVIEW - YOUFIXTHIS.COM

Download full manual at youfixthis.com

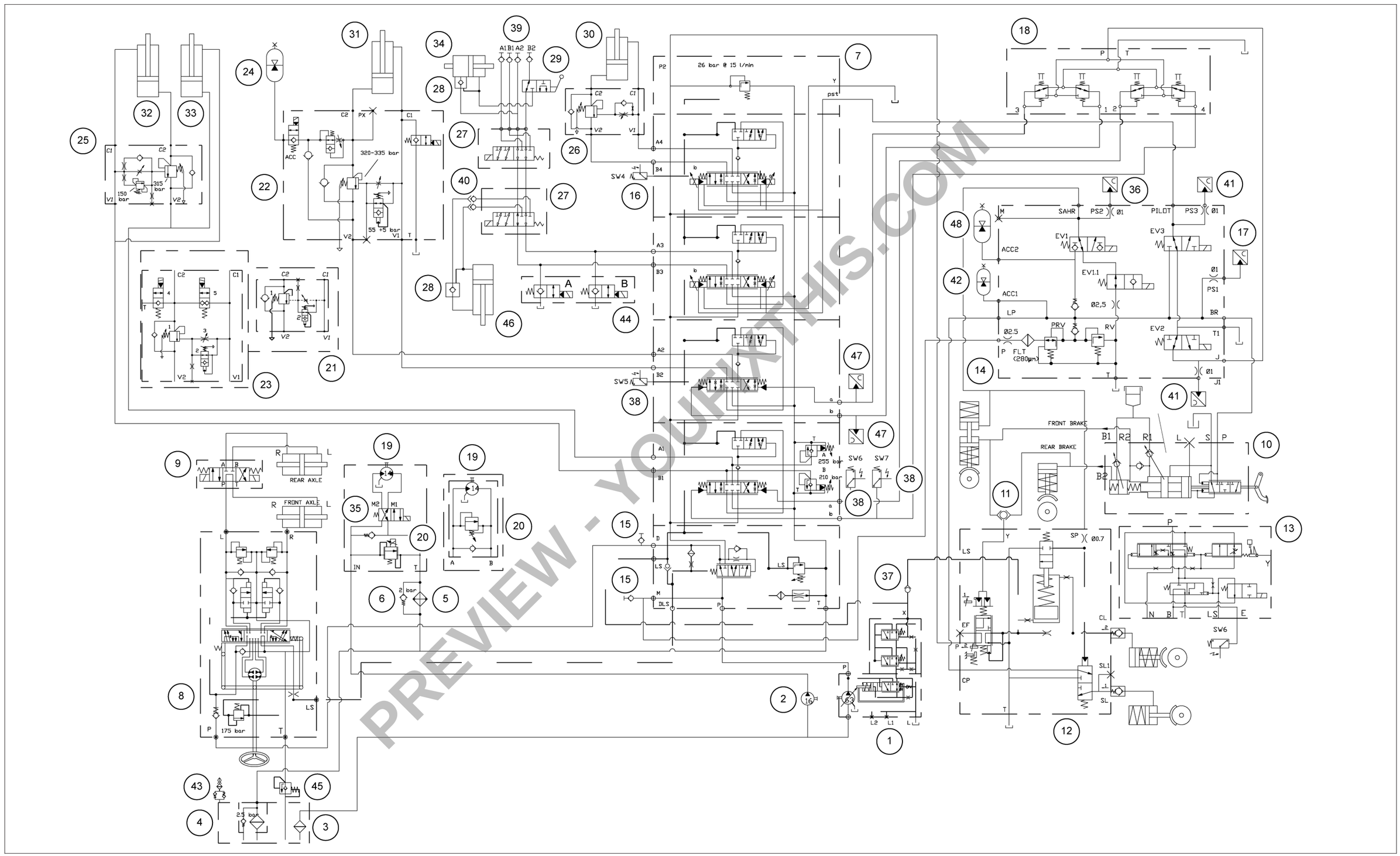

PREVIEW - YOUFIXTHIS.COM

LEIL17TLH0837JB 1

Download full manual at youfixthis.com

Steering control - Hydraulic schema

LM 6.32 TELEHANDLER LM 6.32	NA
LM 6.35 TELEHANDLER LM 6.35 ELITE	NA
LM 7.35 TELEHANDLER LM 7.35	NA
LM 7.42 TELEHANDLER LM 7.42 CL	NA
LM 7.42 TELAHANDLER LM 7.42 ELITE	NA
LM9.35 TELEHANDLER LM 9.35	NA

Variable displacement pump (piston pump) version

1. Variable displacement pump (piston pump)
2. Steering priority valve
3. Power steering control valve
4. Steering mode valve

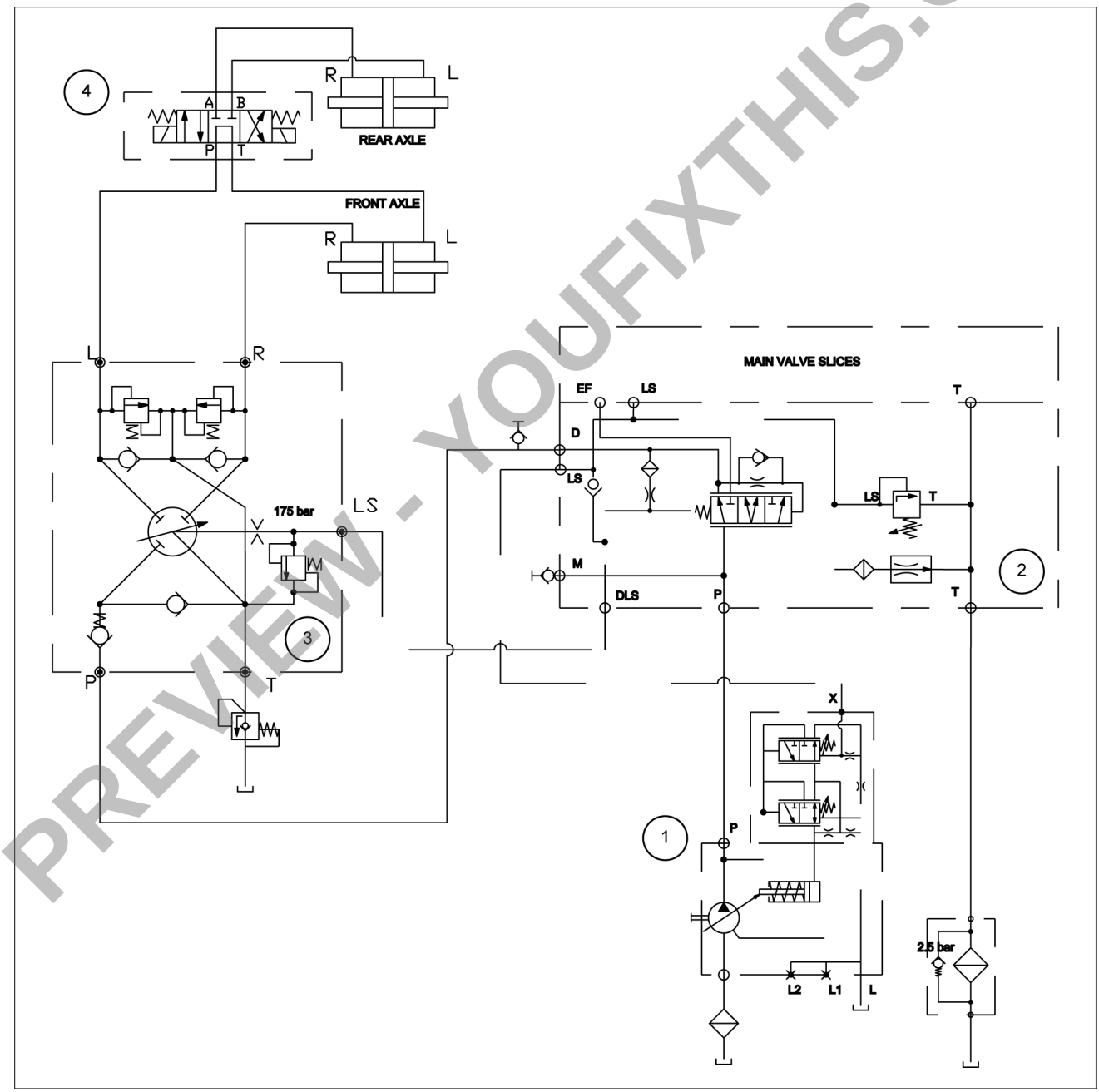

LEIL17TLH1044GB 1

PREVIEW - YOUFIXTHIS.COM

Download full manual at youfixthis.com

Air conditioning - Service instruction

LM 6.32 TELEHANDLER LM 6.32	NA
LM 6.35 TELEHANDLER LM 6.35 ELITE	NA
LM 7.35 TELEHANDLER LM 7.35	NA
LM 7.42 TELEHANDLER LM 7.42 CL	NA
LM 7.42 TELAHANDLER LM 7.42 ELITE	NA
LM9.35 TELEHANDLER LM 9.35	NA

Precaution for use

NOTICE: *direct contact with refrigerant can cause frostbite or blindness.*
Always use safety eyewear and protective gloves. Never work with the face anywhere near refrigerant liquid.

NOTICE: *PAG oil used in **R134A** filled systems will absorb moisture rapidly when exposed to the atmosphere.*

Treat components of the air-conditioning system with care: do not strike or drop them.

Precautions to be taken with pipelines

- When connecting hoses **(1)** or rigid pipes **(5)**, position the O-ring **(3)** correctly on the locating circumference.
- Lubricate pipe/hose fittings and O-rings with mineral oil.
- Couple the nuts **(2)** and fittings **(4)** snugly with the port or union of the parts being connected and tighten the nut initially by hand. Thereafter, tighten to the prescribed torque.

NOTE: *Always lubricate O-rings using oil compatible with **R134A** refrigerant.*

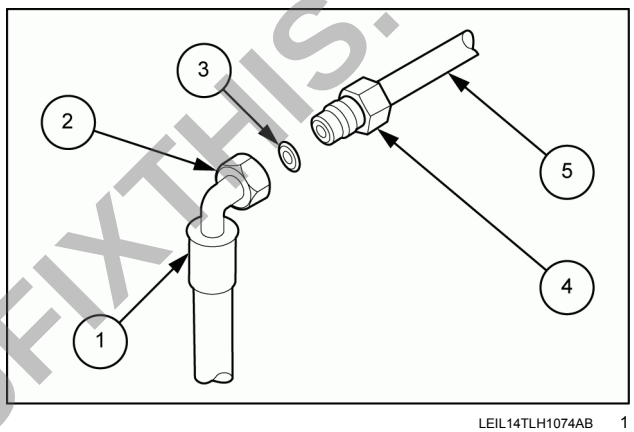

LEIL14TLH1074AB 1

Do not use the wrong type of refrigerant

Before charging the air-conditioning system, make certain that the selected refrigerant is of the correct type. Similarly, make certain that the system is indeed designed to operate using **R134A**.

NOTE: *do not mistake one type of air-conditioning refrigerant for another.*

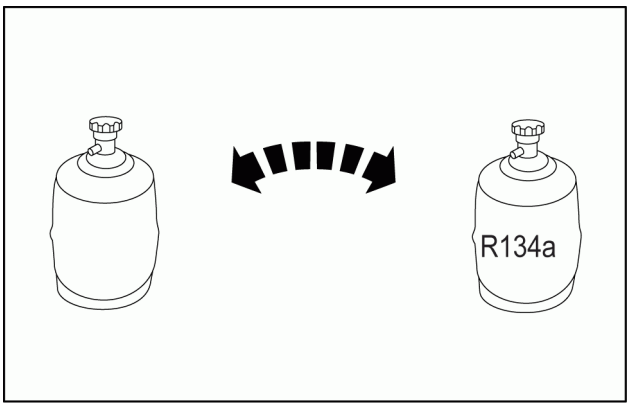

LEIL14TLH1075AB 2

PREVIEW - YOUFIXTHIS.COM

Download full manual at youfixthis.com

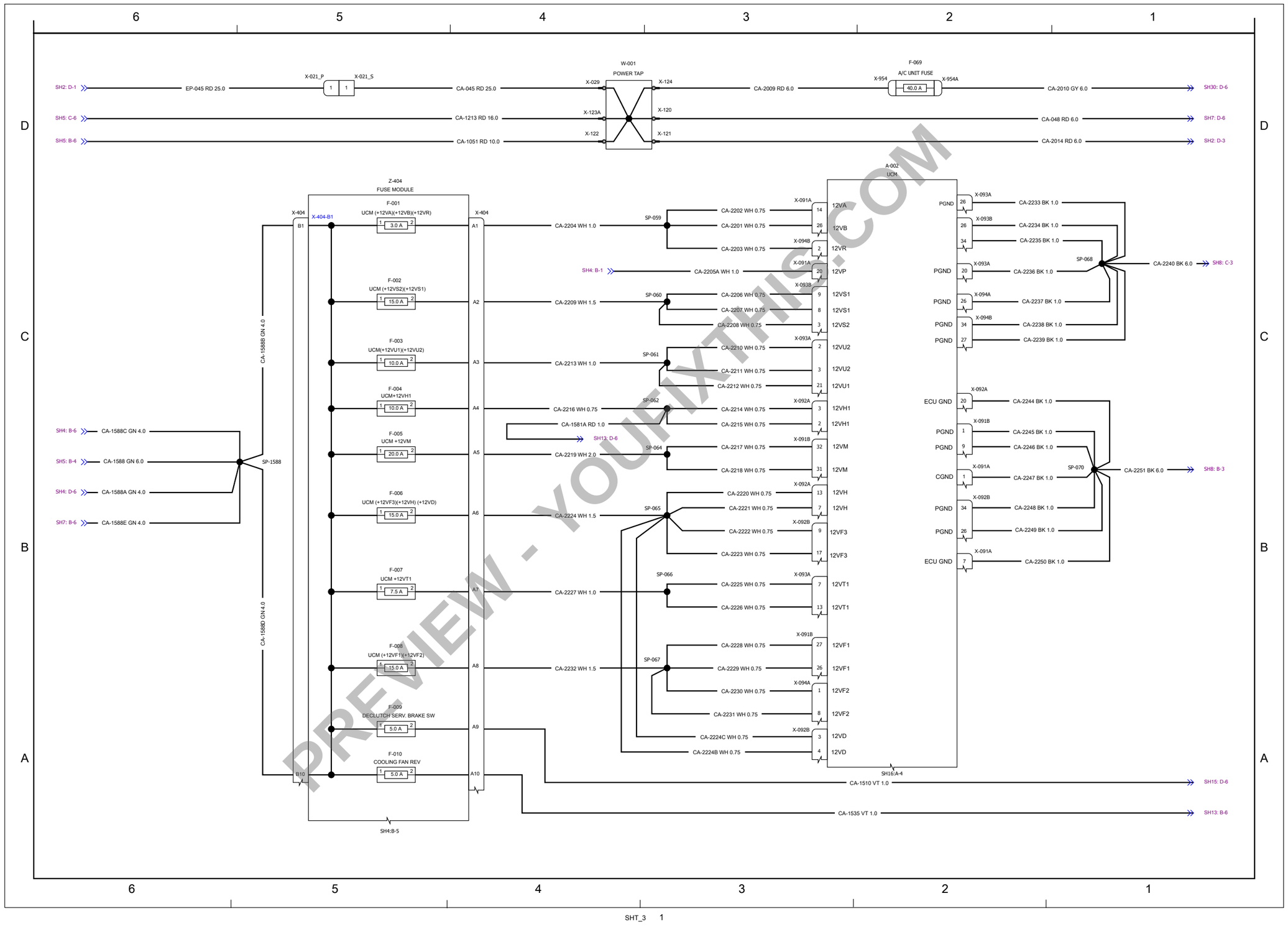

PREVIEW - YOUFIXTHIS.COM

Download full manual at youfixthis.com

Engine starter - Remove

LM 6.32 TELEHANDLER LM 6.32	NA
LM 6.35 TELEHANDLER LM 6.35 ELITE	NA
LM 7.35 TELEHANDLER LM 7.35	NA
LM 7.42 TELEHANDLER LM 7.42 CL	NA
LM 7.42 TELAHANDLER LM 7.42 ELITE	NA
LM9.35 TELEHANDLER LM 9.35	NA

1. Park the machine on a firm level ground and lower the boom arm to the floor.
2. Apply the parking brake.
3. Press the upper part of the battery isolator switch to disconnect the battery. Stop the engine.
4. Move the joystick in all directions to release the hydraulic pressure.

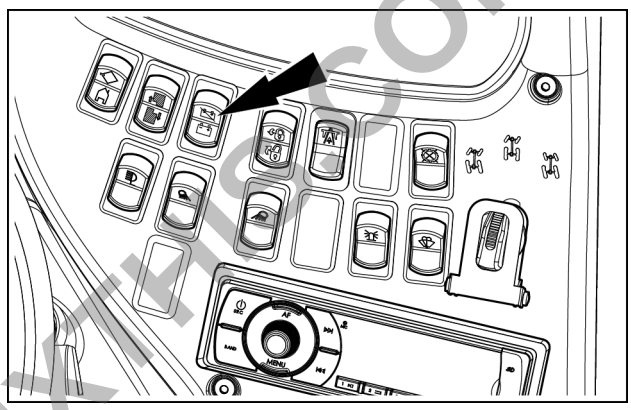

LEIL17TLH1186AA 1

5. Remove the retaining bolts **(2)** and the nuts **(3)** that fix the cover **(1)** to the frame lower side and to the engine compartment.
6. Remove the cover **(1)** from the bottom side of the machine.

NOTE: *steps **5** and **6** are necessary to gain accessibility to the engine starter from the bottom side of the machine.*

NOTE: *for clarity, the drive shaft is not shown in figure **2**.*

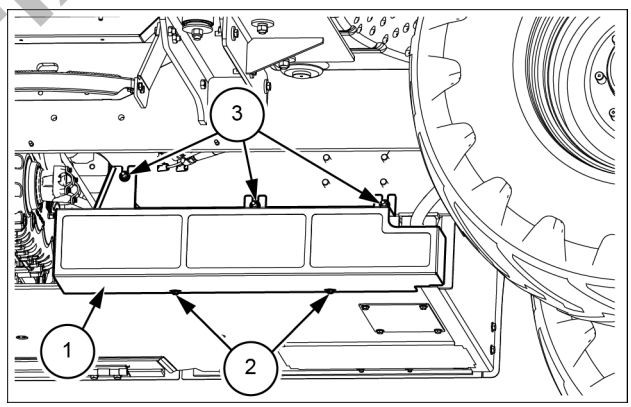

LEIL17TLH1178AB 2

NOTE: *if equipped, remove the drive shaft cover guard **(4)** to gain accessibility to the cover **(1)**.*

NOTE: *if necessary, remove the drive shaft **(5)**, as well.*

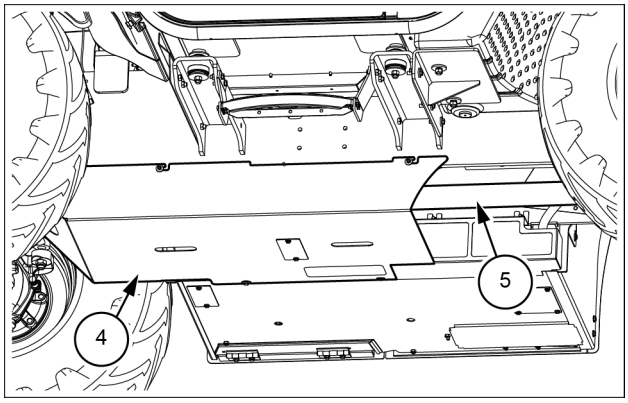

LEIL17TLH1179AB 3

PREVIEW - YOUFIXTHIS.COM

Download full manual at youfixthis.com

2930 - Error on initialization ZF serial line library

LM 6.32 TELEHANDLER LM 6.32	NA
LM 6.35 TELEHANDLER LM 6.35 ELITE	NA
LM 7.35 TELEHANDLER LM 7.35	NA
LM 7.42 TELEHANDLER LM 7.42 CL	NA
LM 7.42 TELAHANDLER LM 7.42 ELITE	NA
LM9.35 TELEHANDLER LM 9.35	NA

Control Module: UCM

Context:
UCM serial driver is corrupted.

Possible failure modes:

- UCM failure

Solution:

1. UCM needs to be re-programmed. Re-program the UCM.
2. Replace the UCM.

PREVIEW - YOUFIXTHIS.COM

Download full manual at youfixthis.com

Telescopic single arm - 83

Telescopic arm - 122

LM 6.32, LM 6.35, LM 7.35, LM 7.42 , LM 7.42, LM9.35

PREVIEW - YOUFIXTHIS.COM

Download full manual at youfixthis.com

Cab - Remove

LM 6.32 TELEHANDLER LM 6.32	NA
LM 7.35 TELEHANDLER LM 7.35	NA
LM 7.42 TELEHANDLER LM 7.42 CL	NA
LM9.35 TELEHANDLER LM 9.35	NA

⚠ WARNING

Heavy objects!
Lift and handle all heavy components using lifting equipment with adequate capacity. Always support units or parts with suitable slings or hooks. Make sure the work area is clear of all bystanders. Failure to comply could result in death or serious injury.

W0398A

⚠ WARNING

Chemical hazard!
When handling fuel, lubricants, and other service chemicals, follow the manufacturer's instructions. Wear Personal Protective Equipment (PPE) as instructed. Do not smoke or use open flame. Collect fluids in proper containers. Obey all local and environmental regulations when disposing of chemicals.
Failure to comply could result in death or serious injury.

W0371A

1. Park the machine on level ground in neutral, with the parking brake applied and the boom completely raised. Lock the boom with the safety device.
2. Turn the engine OFF.
3. Press the battery isolator switch **(1)** in the upper position **(B)** to disable the battery.

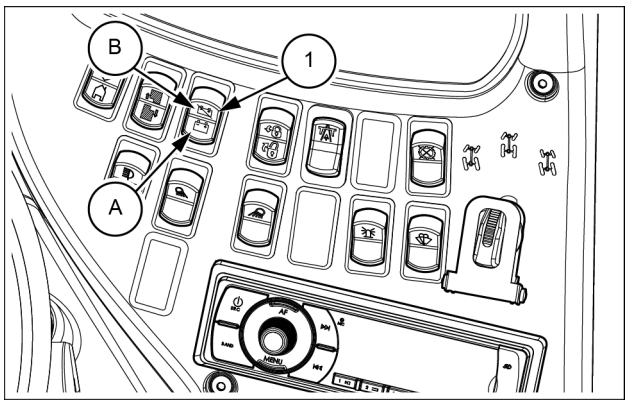

LEIL17TLH1157AB 1

4. Move the joystick in all directions to release the hydraulic pressure.
5. Remove the two retaining screws **(2)**. Remove the filter protective cover **(1)**.

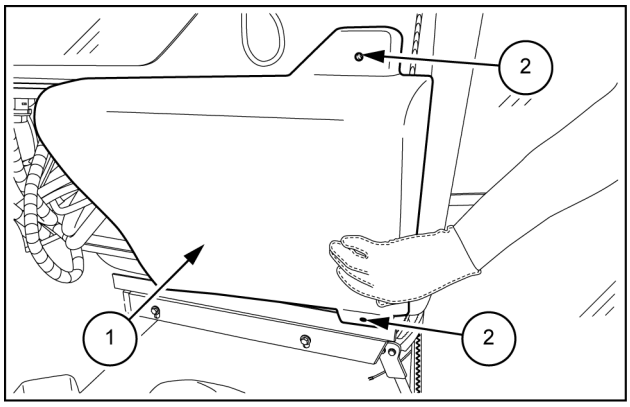

LEIL13TLH0387AB 2

PREVIEW - YOUFIXTHIS.COM

Download full manual at youfixthis.com

Contents

INTRODUCTION

Engine 10

[10.001] Engine and crankcase 10.1

[10.216] Fuel tanks 10.2

[10.206] Fuel filters 10.3

[10.202] Air cleaners and lines 10.4

[10.500] Selective Catalytic Reduction (SCR) exhaust treatment 10.5

[10.400] Engine cooling system 10.6

[10.414] Fan and drive 10.7

Transmission 21

[21.113] Powershift transmission 21.1

[21.135] Powershift transmission external controls 21.2

[21.155] Powershift transmission internal components 21.3

[21.120] Gearbox 21.4

[21.109] Transmission cooler and lines 21.5

[21.700] Torque converter 21.6

Four-Wheel Drive (4WD) system 23

[23.314] Drive shaft 23.1

Front axle system 25

[25.100] Powered front axle 25.1

[25.102] Front bevel gear set and differential 25.2

[25.108] Final drive hub, steering knuckles, and shafts 25.3

Rear axle system 27

[27.100] Powered rear axle 27.1

[27.106] Rear bevel gear set and differential 27.2

[27.120] Planetary and final drives 27.3

PREVIEW - YOUFIXTHIS.COM

Download full manual at youfixthis.com

Introduce the whole converter, until splines of turbine shaft and stator shaft are engaged.

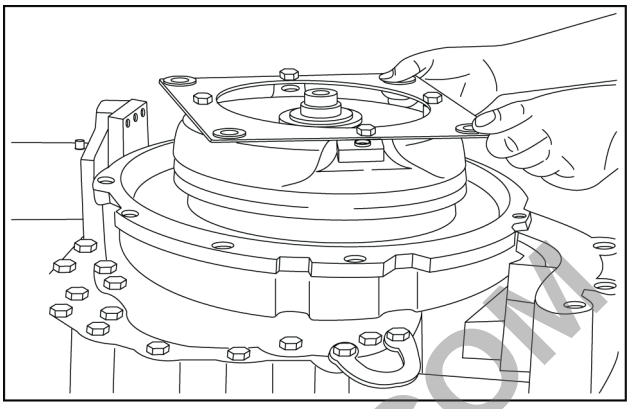

LEIL13TLH1285AA 4

Control measure for lined up converter – from top diaphragm to flange surface/housing (converter bell)
L = approximately **56 mm** (**2.2 in**).
The indicated control measure only serves for the installation of the converter, not for the assembly of engine/gearbox.

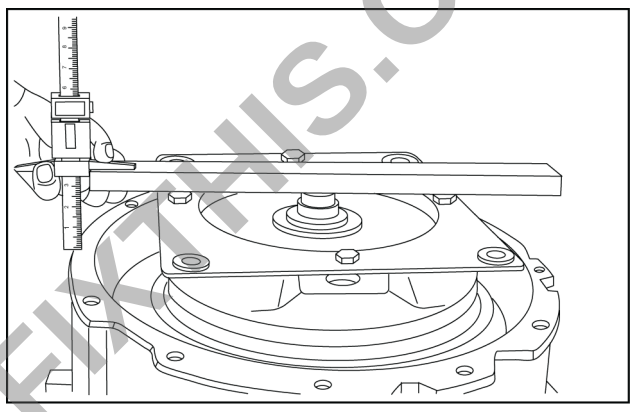

LEIL13TLH1286AA 5

NOTICE: *Secure converter with quick-acting straps.*

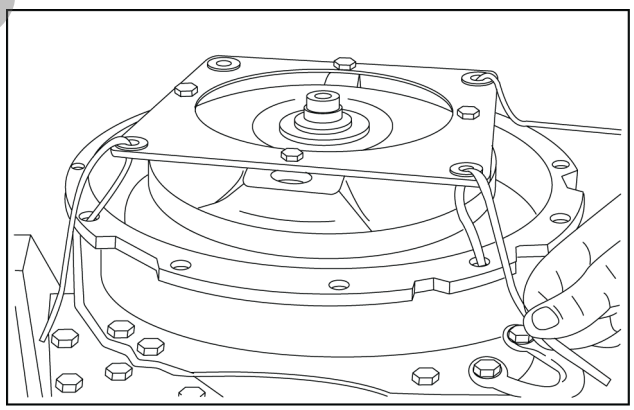

LEIL13TLH1287AA 6

Turn gearbox by **180°**.
Mount breather with sealing compound using **LOCTITE® 243™**.

Tighten the screws **M10 x 1** to **12 N·m** (**9 lb ft**).

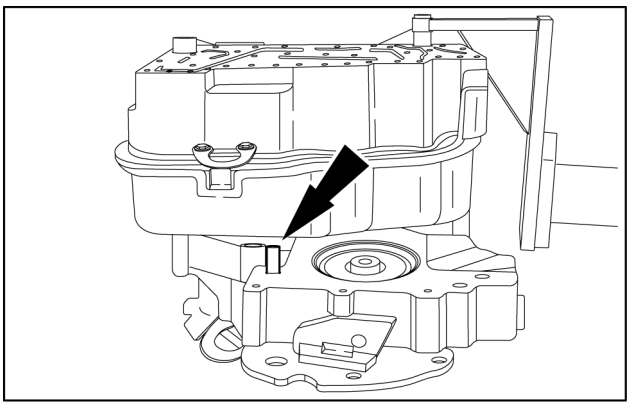

LEIL13TLH1288AB 7

Download full manual at youfixthis.com
PREVIEW - YOUFIXTHIS.COM

Main control valve - Exploded view

LM 6.32 TELEHANDLER LM 6.32	NA
LM 7.35 TELEHANDLER LM 7.35	NA
LM9.35 TELEHANDLER LM 9.35	NA

Outlet section (for fixed displacement pump version)

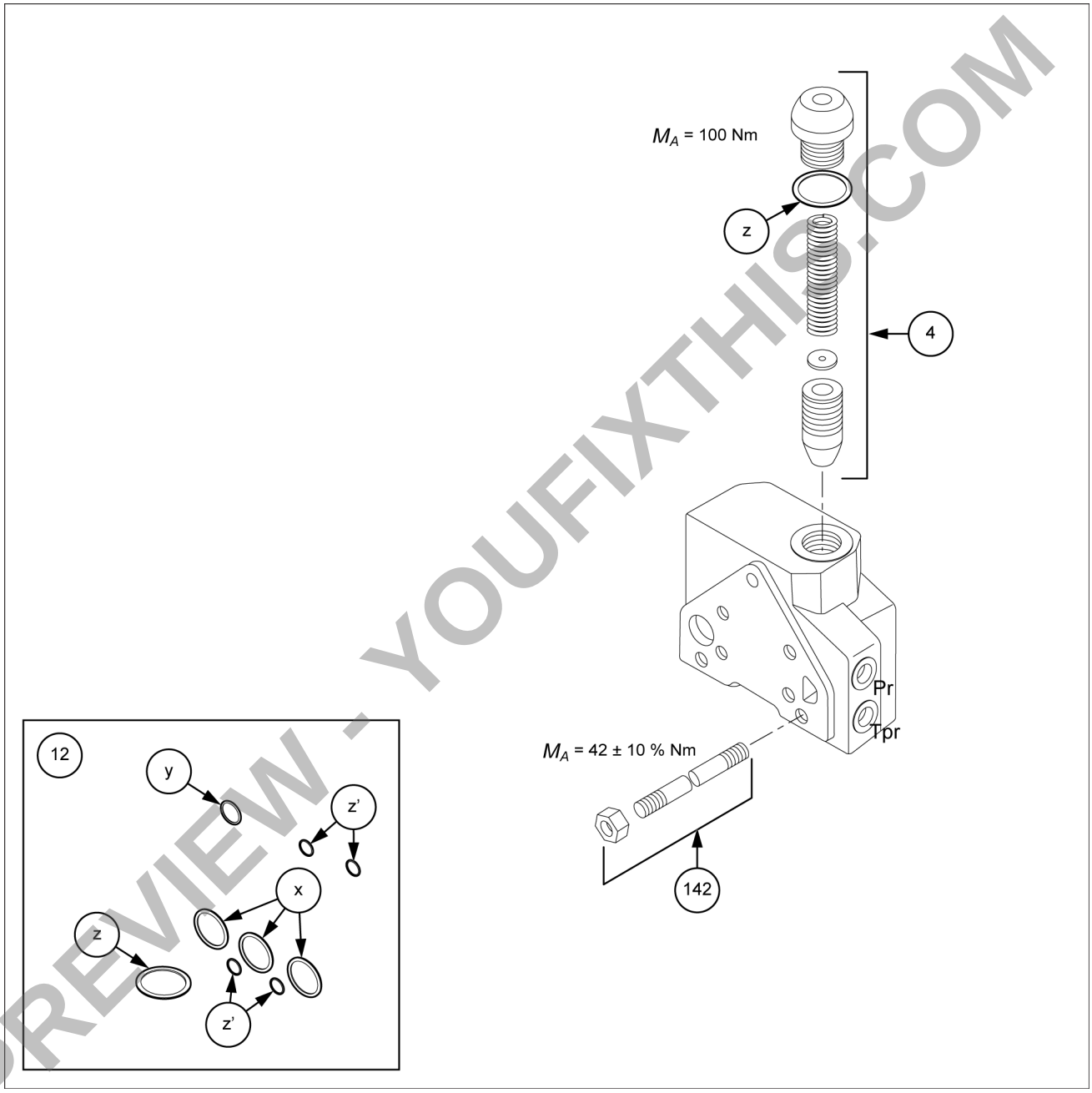

LEIL17TLH1081GB 1

4. Flushing valve kit
12. Seal kit for electro-hydraulic
142. Tie bolts L= **289 mm** (**11.4 in**); **M10**

PREVIEW - YOUFIXTHIS.COM

Download full manual at youfixthis.com

Evaporator/Heater coil - Dynamic description

LM 6.32 TELEHANDLER LM 6.32	NA
LM 6.35 TELEHANDLER LM 6.35 ELITE	NA
LM 7.35 TELEHANDLER LM 7.35	NA
LM 7.42 TELEHANDLER LM 7.42 CL	NA
LM 7.42 TELAHANDLER LM 7.42 ELITE	NA
LM9.35 TELEHANDLER LM 9.35	NA

The evaporator is located in the HVAC unit, below the dashboard, and it is composed by a series of plates brazed to a set of thin gauge cooling fins to provide the maximum heat transfer in the smallest possible space.

The low temperature refrigerant in the evaporator absorbs heat from the warmer air in the operator station, this action serves to cool the air.

PREVIEW - YOUFIXTHIS.COM

Download full manual at youfixthis.com

Wire connectors - Component localization - Engine and transmission harness

LM 6.32 TELEHANDLER LM 6.32	NA
LM 7.35 TELEHANDLER LM 7.35	NA
LM 7.42 TELEHANDLER LM 7.42 CL	NA
LM9.35 TELEHANDLER LM 9.35	NA

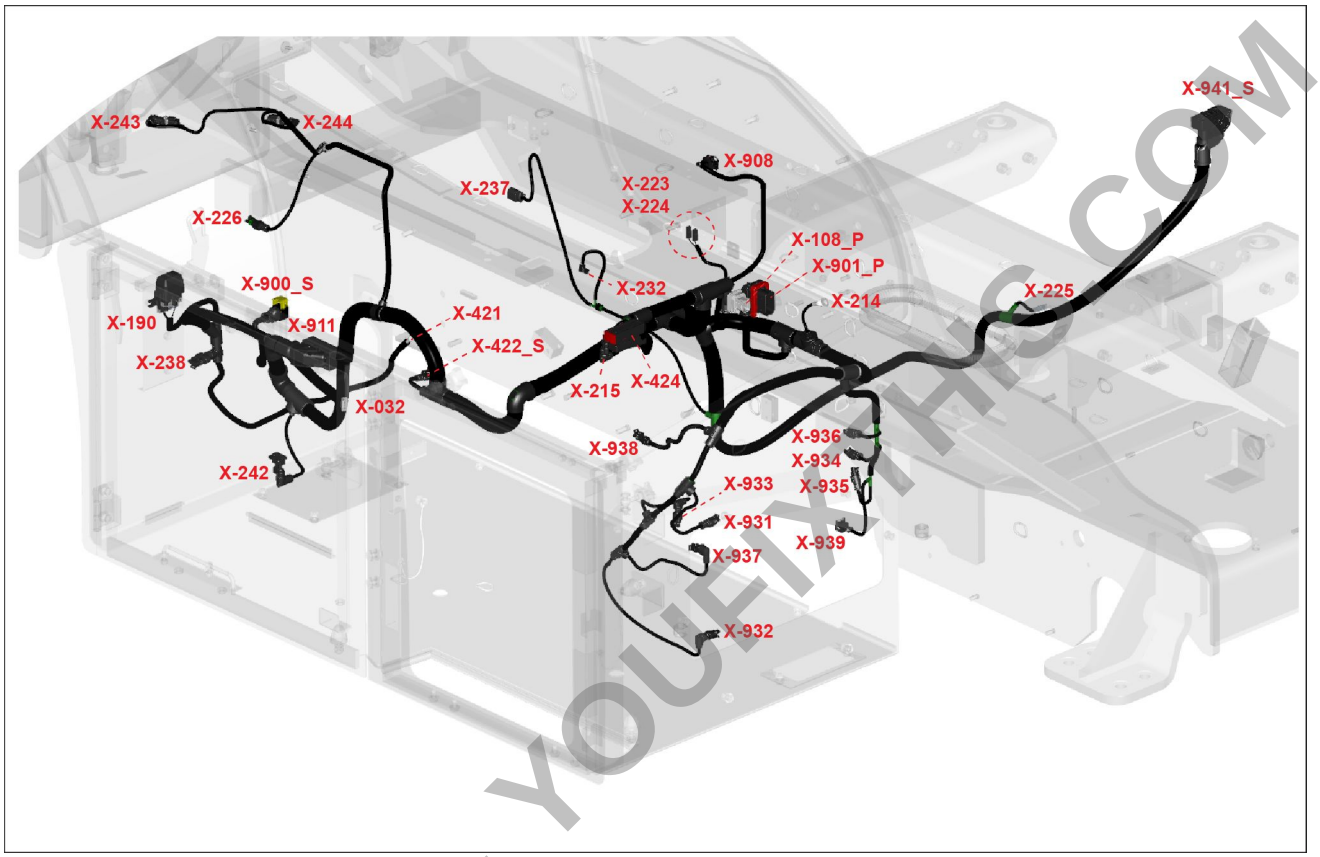

LEIL17TLH1442F 1

PREVIEW - YOUFIXTHIS.COM

Download full manual at youfixthis.com

Pin	From	Wire	Description	Color-Size	Frame
1	SP-1561-P-X	CA-1561	THERMOSTAT-A/C SW	VT - 0.5	**SHEET 30 SH30 - A/C & amp; DRIVE STEPPER MOTOR**
2	**X-941_P (Plug) pin C4** - CAB - ENGINE BULKHEAD [SH11: B-6] (84254825)	CA-021	FILTER PRESSURE SW-THERMOSTAT	YE - 0.75	
3	SP-1566-P-X	CA-1566B	GND-THERMOSTAT	BK - 0.5	

X-055 - RADIO [A-006] (87709371) (Receptacle)

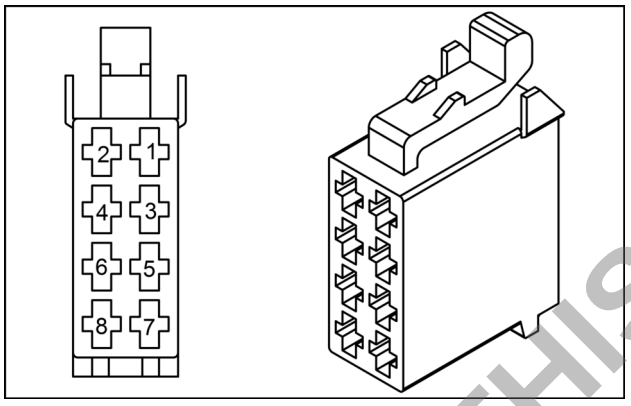

87709371 7

87709371

Pin	From	Wire	Description	Color-Size	Frame
3	**X-031_S (Receptacle) pin 1** - CAB - ROOF INTERCONNECT [SH24: C-1] (87691927)	CA-1155	RADIO-RH SPEAKER	BR - 0.75	**SHEET 25 SH25 - RADIO, BACK UP ALARM AND CIGAR LIGHTER**
4	**X-031_S (Receptacle) pin 2** - CAB - ROOF INTERCONNECT [SH24: C-1] (87691927)	CA-1156	RADIO-RH SPEAKER	RD - 0.75	
5	**X-031_S (Receptacle) pin 8** - CAB - ROOF INTERCONNECT [SH24: C-1] (87691927)	CA-1157	RADIO-LH SPEAKER	BK - 0.75	
6	**X-031_S (Receptacle) pin 9** - CAB - ROOF INTERCONNECT [SH24: C-1] (87691927)	CA-1158	RADIO-LH SPEAKER	RD - 0.75	

X-056 - RADIO [SH25: D-1] (87709660) (Receptacle)

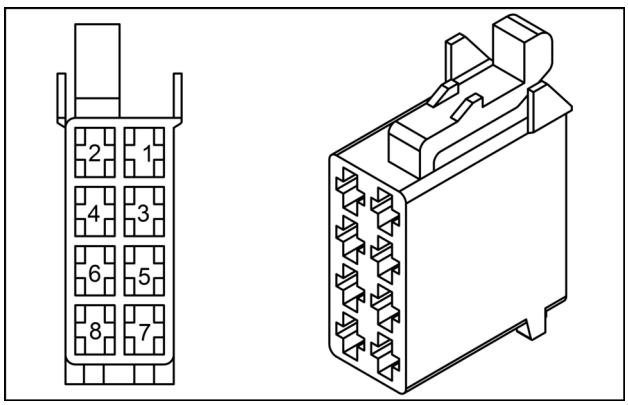

87709660 8

87709660

Pin	From	Wire	Description	Color-Size	Frame
4	SP-1059-P-X	CA-1059B	FUSE- RADIO	WH - 1.0	**SHEET 25 SH25 - RADIO, BACK UP ALARM AND CIGAR LIGHTER**
6	SP-017-P-X	CA-1242	BACKLIGHT RADIO	YE - 1.0	
7	**X-400 pin A12** - FUSE HOLDER [SH5: D-1] (48049606)	CA-1061	FUSE-RADIO	GN - 1.0	**SHEET 06 SH06 - FUSE MODULE (Z-400)**
8	SP-093-P-X	CA-1248	GND-RADIO	BK - 1.0	**SHEET 08 SH08 - GROUNDING, MAIN CAB AND ENGINE**

PREVIEW - YOUFIXTHIS.COM
Download full manual at youfixthis.com

28. If the UCM does not verify the position, the KO box will be lighted.
    The KO box will be lighted for 2 seconds.
29. After the expiration of the 2 seconds KO box, a CALIBRATION FAIL screen will be visualized.
    The CALIBRATION FAIL screen will stay visualized until the operator does a key OFF.

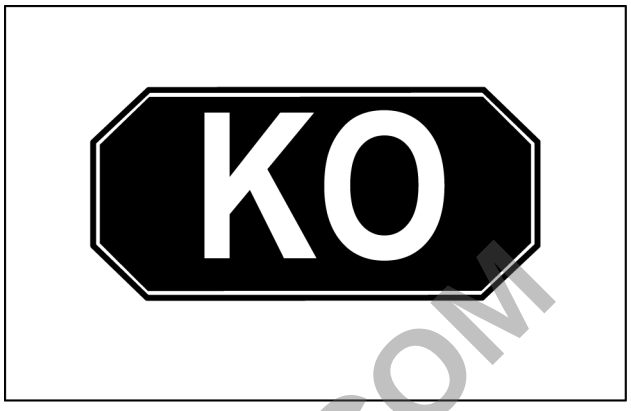

LEIL14TLH0011AA 52

30. If the UCM verifies the position, the OK box will be lighted for 2 seconds.
31. After the expiration of this time, the display will skip to the fourth page.

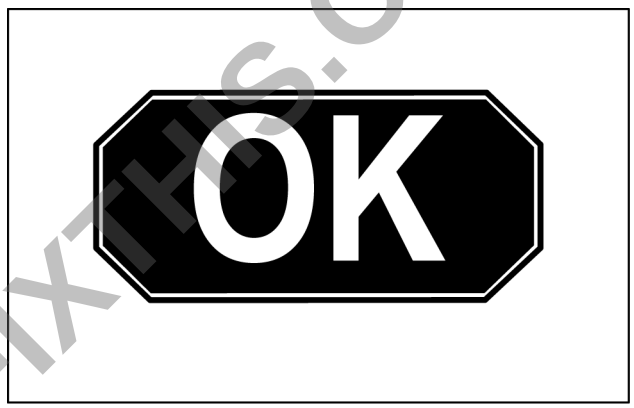

LEIL14TLH0012AA 53

Fourth point calibration (60% ROLL OVER RISK)

32. The fourth point page will be the one shown in figure **54**.

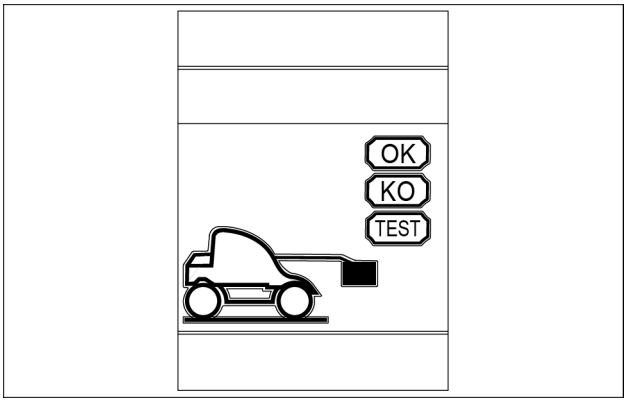

LEIL15TLH0323AA 54

33. With the same load on forks (Q), boom parallel to the ground, retract the telescope of **500 mm** (**19.7 in**) from the previous position. This point corresponds to the enter the yellow zone.
    - Same load as the previous point.
    - Telescopic retracted of **500 mm** (**19.7 in**) from $d_{80\%}$ of the previous point.

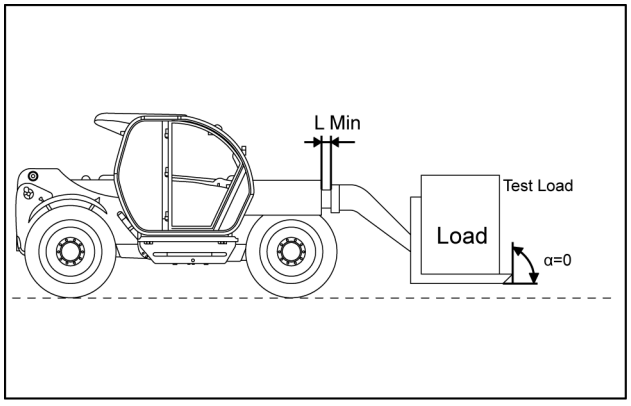

LEIL13TLH1695AA 55

PREVIEW - YOUFIXTHIS.COM
Download full manual at youfixthis.com

3735 - (DTC 8355) - Fuel metering unit has an over-temperature error

LM 6.32 TELEHANDLER LM 6.32	NA
LM 6.35 TELEHANDLER LM 6.35 ELITE	NA
LM 7.35 TELEHANDLER LM 7.35	NA
LM 7.42 TELEHANDLER LM 7.42 CL	NA
LM 7.42 TELAHANDLER LM 7.42 ELITE	NA
LM9.35 TELEHANDLER LM 9.35	NA

Control Module: ECU

Context:
For more information on the fuel metering unit Y-9000 see **Injection control - Dynamic description (55.010)**. The Electronic Control Unit (ECU) A-9000 monitors the fuel metering unit Y-9000 circuit for an over temperature/current condition. If an over temperature/current condition is detected, this fault will occur.

Cause:
The A-9000 has detected an over temperature/current condition in the Y-9000 circuit.

Possible failure modes:

1. Faulty Y-9000, internal failure.
2. Faulty Y-9000, wiring.
3. Faulty A-9000, software.

Solution:

1. Verify fault is present and active.

   Use the Electronic Service Tool (EST) to check the status of this fault.

   A. If the fault is present and active, continue to Step **2**.

   B. If the fault is no longer present or in an inactive state, the fault may be intermittent and not currently active. Continue to Step **6**.

2. Check fuel metering unit Y-9000 for an internal failure.

   Disconnect connector **X-9007**.

   Use a multimeter to perform the following resistance check:

From	To	Value
X-9007 pin 1	**X-9007 pin 2**	There should be **2.8 – 3.2 Ω**.

   A. If there is between **2.8 – 3.2 Ω**, leave **X-9007** disconnected and continue to Step **3**.

   B. If there is not between **2.8 – 3.2 Ω**, the Y-9000 has failed internally. Replace the Y-9000.

3. Check the Y-9000 wiring for a short circuit condition.

   Disconnect connector **X-9002**.

   The key must be in the OFF position.

   Use a multimeter to perform the following continuity check:

From	To	Value
X-9002 pin 58	All pins in connector **X-9002**	There should be no continuity.
X-9002 pin 83	All pins in connector **X-9002**	There should be no continuity.

   A. If there is continuity, there is a short circuit in the Y-9000 wiring. locate and repair the shorted conductor.

PREVIEW - YOUFIXTHIS.COM

Download full manual at youfixthis.com

14022 - Cranking line - shorted to GND

LM 6.35 TELEHANDLER LM 6.35 ELITE	NA
LM 7.42 TELAHANDLER LM 7.42 ELITE	NA

Control Module: ADIC

Context:
Analog-Digital Instrument Cluster (ADIC) has detected a failure on the cranking line

Possible failure modes:

1. Short circuit to ground on cranking line
2. Ignition key switch (S-002) failure
3. UCM failure
4. ADIC failure

Solution:

1. Check if the cranking line is shorted to ground on the following points:
   A. **X-061 (Receptacle) pin 17** of ADIC
   B. **X-092B (Receptacle) pin 24** of UCM
   C. **X-424 (Receptacle)** pin 9 of the PDU box Z-001
   D. **X-427B (Plug)** pin 8 of ignition key switch (S-002)
2. Replace the ignition key switch (S-002)
3. Replace the starter relay (K-001)
4. Replace the UCM
5. Replace the ADIC

Wiring harnesses - Electrical schematic sheet 02 (55.100)
Wiring harnesses - Electrical schematic sheet 13 (55.100)
Wiring harnesses - Electrical schematic sheet 18 (55.100)

PREVIEW - YOUFIXTHIS.COM

Download full manual at youfixthis.com

PREVIEW ONLY

You're viewing 25 of 2737 pages

The full manual includes:

- All 2737 pages, complete
- Searchable PDF (find any keyword)
- No watermarks
- Instant download
- Print-ready quality

GET FULL MANUAL NOW

New Holland LM6.32, LM6.35, LM7.35, LM7.42, LM7.42CL, LM9.35 Service Manual



Scan or click anywhere
youfixthis.com

Click anywhere on this page to get the full manual