ENGINE DATA

		88 kW (120 Cv) Turbocharged with Aftercooler
Model		Diesel
Number of cylinders		4 in line
Bore	mm	104
Stroke	mm	132
Displacement	cm^3	4485
Compression ratio		17.5 : 1
Firing order		1.3.4.2
Idle speed	rpm	850-950
Maximum “no-load” speed	rpm	2300-2400
Rated speed	rpm	2200
Maximum torque		525 Nm

COOLING SYSTEM

Type	Pressurized full flow, with by-pass, with expansion chamber
Fan	9 vanes
Fan belt play	10 - 13 mm
Drive belt play	13 -16 mm
Air conditioner compressor	16 mm
Thermostat:	
Starts to open at	81° - 96 5°
Radiator cap	1 bar

FUEL SYSTEM

Injection pump	
Type	Rotary
Cold starting device	Thermostart
Excess fuel device	Automatic regulator
Engine cutout	Electromagnetic
Feed pump	Diaphragm pump

PREVIEW - YOUFIXTHIS.COM

Download full manual at youfixthis.com

REMOVAL AND INSTALLATION OF ENGINE AND RADIATOR

Preliminary operations

- Position the machine on a flat and compact surface.
- Apply the parking brake and chock the wheels with wedges.
- Use only the recommended tools.
- Do not insert hands or extraneous components between parts.
- Disconnect the battery before proceeding.
- Remove the engine hood and cowling.
- Disconnect the propeller shafts.

⚠ CAUTION ⚠

Do not allow unauthorized persons to carry out repair or maintenance work on this machine. Be certain to read the Use and Maintenance Manual with care before starting, operating, servicing, refuelling or repairing this machine.

Turn the **STARTER SWITCH** (1) to the **OFF** position and display the "**DO NOT START**" warning card.

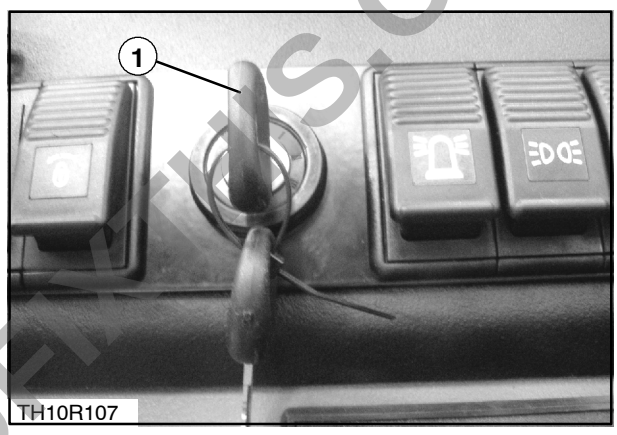

7

⚠ IMPORTANT ⚠

From this point onwards, mark all electrical connections and hydraulic pipes to facilitate the process of RESTORING CONNECTIONS DURING REFITMENT.

Removal of electrical part

Remove the fuse box (2) and cold starting device (3) from inside the engine compartment.

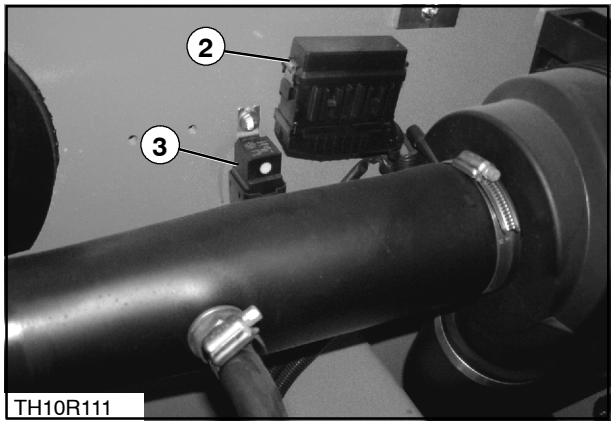

8

Detach the earth strap (4).

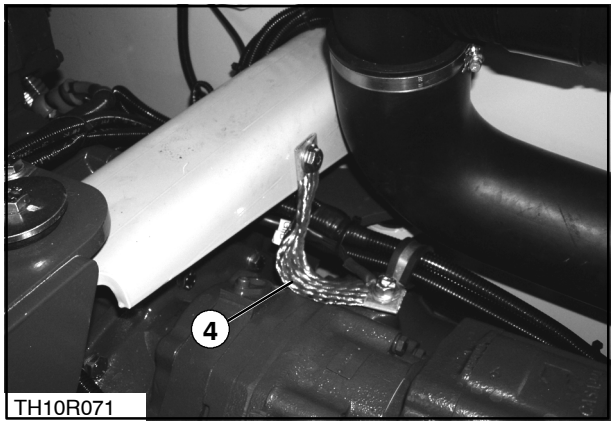

9

PREVIEW - YOUFIXTHIS.COM
Download full manual at youfixthis.com

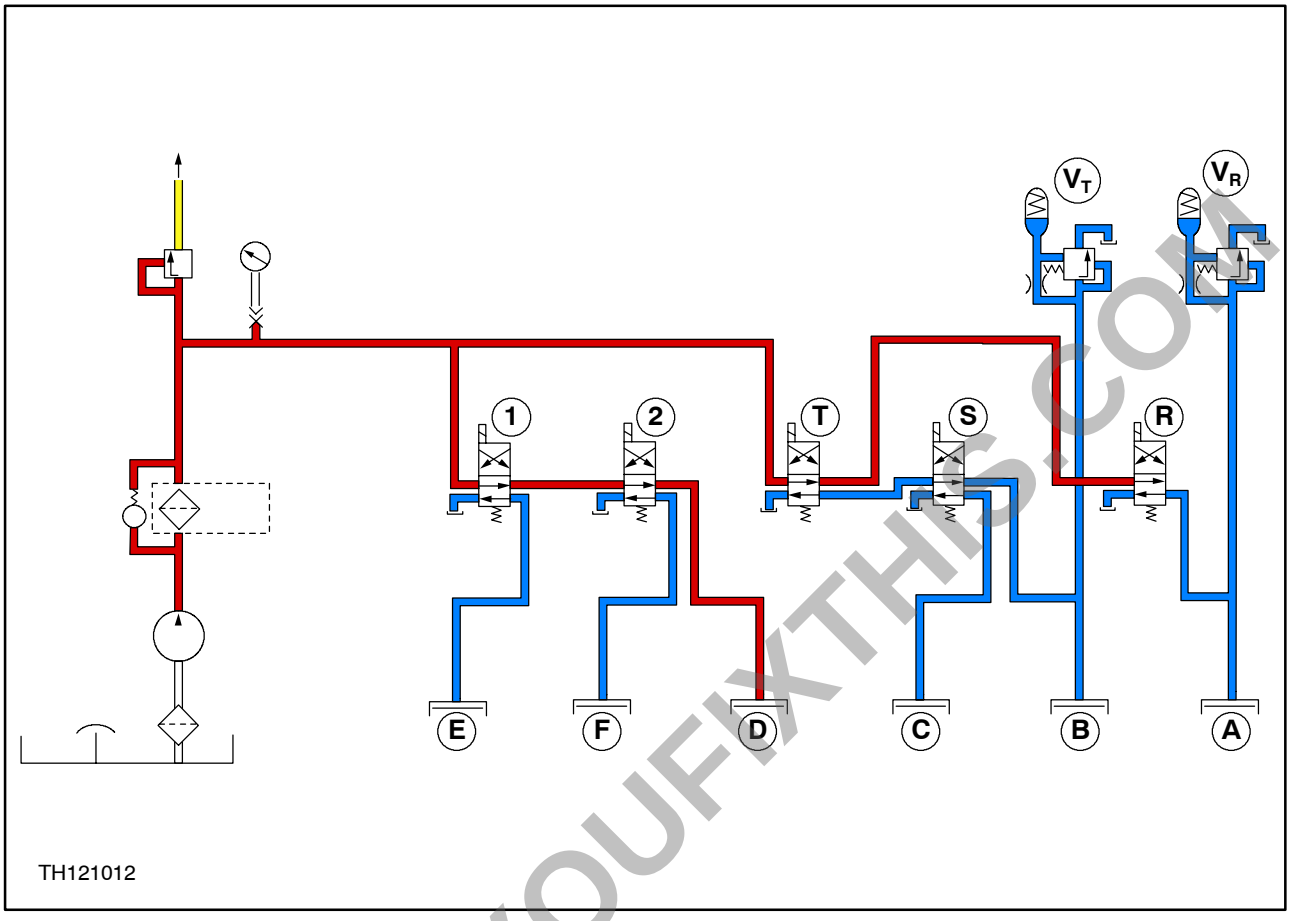

18

Low pressure oil to pump inlet

Torque converter and lubrication oil (2–7 bar)

High pressure oil (16.5 – 19.3 bar)

Return to tank

V_T Forward modulating valve

V_R Reverse modulating valve

High pressure flow from the pump is directed through the system pressure regulating valve to solenoid valve 1 and forward solenoid T.

Since there are no solenoid valves activated, oil can flow only toward clutch D.

Clutches A, B, C, E and F are open to tank.

PREVIEW - YOUFIXTHIS.COM

Download full manual at youfixthis.com

OPERATION OF TRANSMISSION IN THIRD GEAR FORWARD

A – Reverse clutch
B – Forward clutch
C – 4th speed clutch
D – 3rd speed clutch
E – 1st speed clutch
F – 2nd speed clutch

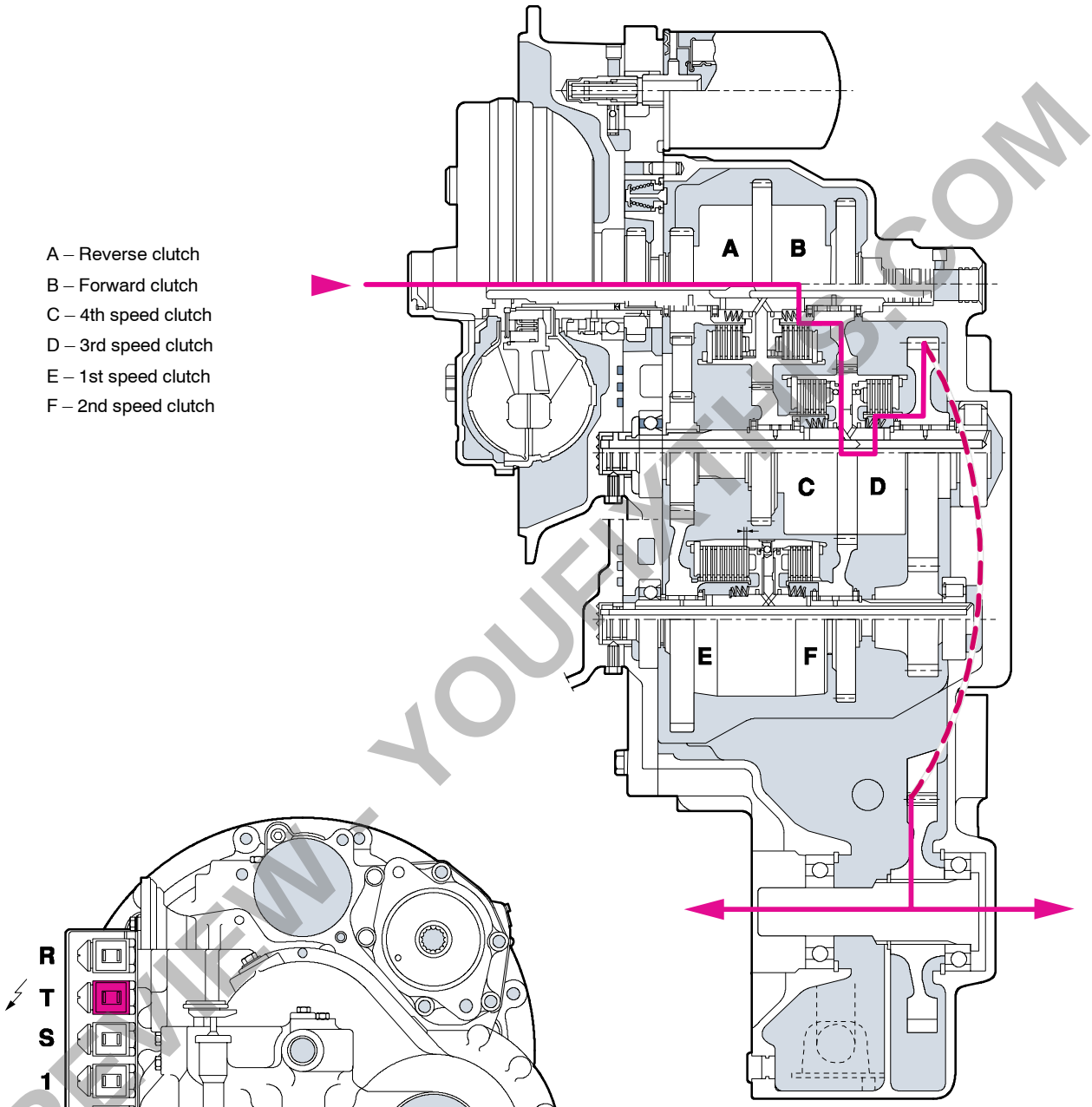

Solenoid valves energized: T

TH121017

23

PREVIEW - YOUFIXTHIS.COM
Download full manual at youfixthis.com

TIGHTENING TORQUES

PART			TORQUE	
			Nm	(kgm)
Bolt, cylinder head	1st stage M12x1,75x70 bolts		50 ±5	(5 ±0,5)
	M12x1.75x140 bolts		40 ±5	(4 ±0,5)
	M12x1,75x180 bolts	♦	70 ±5	(7 ±0,5)
	2nd stage		90°	
	3rd stage (140 and 180 length bolts only)		90°	
Bolt, crankshaft bearing cap	1st stage		50 ±6	(5 ±0,6)
	2nd stage	♦	80 ±6	(8 ±0,6)
	3rd stage		90°	
Bolt, big end cap	1st stage		50 ±6	(5 ±0,5)
	2nd stage	♦	80 ±6	(8 ±0,5)
	3rd stage		90°	
Bolt, engine flywheel	pretighten		30 ±5	(3 ±0,5)
	angle	♦	60° ±5°	
Injector mount			60 ±5 (5 ±0,5)	
Fuel filter			snug + 3/4 turn	
Bolt, injection pump gear cover			25 ±5	(2,5 ±0,5)
Bolt, timing case and cover			25 ±5	(2,5 ±0,5)
Bolt, thermostart			25 ±5	(2,5 ±0,5)
Bolt, intake manifold			25 ±5	(2,5 ±0,5)
Bolt, fuel pump			25 ±5	(2,5 ±0,5)
Bolt, exhaust manifold			53 ±5	(5,3 ±0,5)
Nut, rocker cover			25 ±5	(2,5 ±0,5)
Bolt, rocker mounting			48 ±8	(4,8 ±0,8)
Nut, rocker adjustment			25 ±5	(2,5 ±0,5)
Bolt, crankshaft pulley	pretighten		50 ±5	(5 ±0,5)
	angle		90°	
Bolt, camshaft thrust plate			25 ±5	(2,5 ±0,5)
Bolt, fan mounting			25 ±5	(2,5 ±0,5)
Bolt, injection pump			12 ±5	(1,2 ±0,5)
Bolt, fan pulley			45 ±5	(4,5 ±0,5)
Bolt, turbocharger Heat exchanger	pretighten		25 ±5	(2,5 ±0,5)
Bolt, oil pump and front cover			25 ±5	(2,5 ±0,5)
Bolt, starter motor			55 ±5	(5,5 ±0,5)
Bolt, alternator			45 ±5	(4,5 ±0,5)
Bolt, water pump			25 ±5	(2,5 ±0,5)
Fuel filter			snug + 3/4 turn	
Bolt, belt tensioner			45 ±5	(4,5 ±0,5)

♦ Lubrication with oil.

PREVIEW - YOUFIXTHIS.COM

Download full manual at youfixthis.com

TROUBLESHOOTING

Main operating problems that can affect the engine:

1 – Engine fails to start.
2 – Engine overheats.
3 – Engine lacks power and operation is irregular.
4 – Engine produces black or dark grey smoke.
5 – Engine produces grey (whitish) smoke.
6 – Engine produces blue smoke.
7 – Engine knocks abnormally.
8 – Engine stalls.
9 – Engine overspeeds.
10 – Oil pressure too high or too low.
11 – Excessive fuel consumption.
12 – The engine fails to stop.

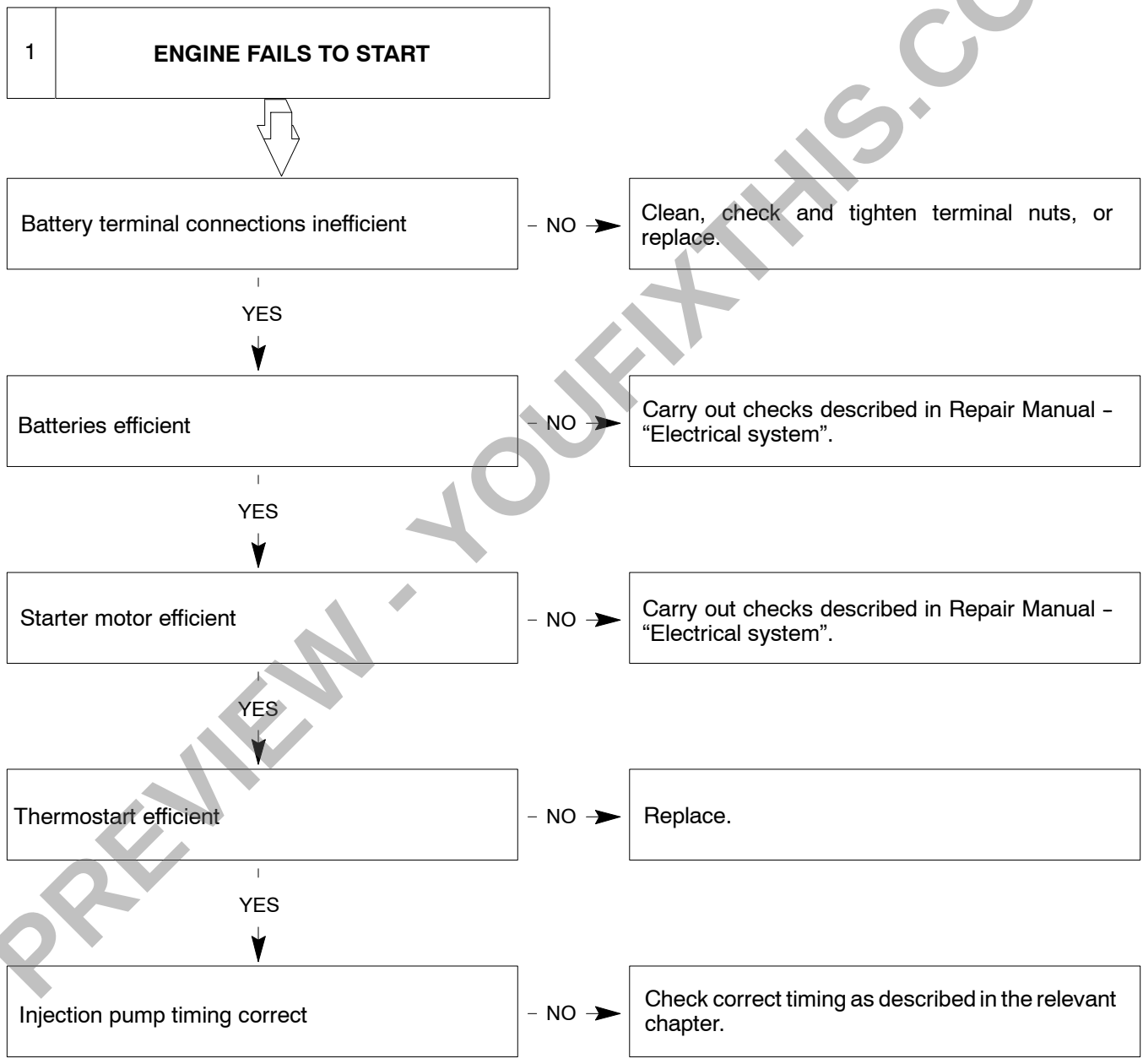

(cont...)

PREVIEW - YOUFIXTHIS.COM
Download full manual at youfixthis.com

Workshop manual
LM740
TELESCOPIC HANDLER

CONTENTS

SECTION 00 - GENERAL

Description	Page
General instructions	1
Safety rules	3
Product identification	6
Environmental considerations	10
Maintenance techniques	11

SECTION 10 – ENGINE

Description	Page
Main engine specifications	3
General engine specifications	4
General information on F4GE9484J*J600 engine	6
Removal and installation of engine and radiator	11
Troubleshooting	23
Tightening torques	36

SECTION 21 - POWERSHIFT TRANSMISSION

Description	Page
Transmission assembly	5
Drop box assembly	7
Operation of gearbox	8
Transmission and hydraulic oil circuit diagrams	15
Operation of modulating valve	31
Torque converter and oil cooler hydraulic circuit	34
Troubleshooting guide	35
Troubleshooting procedures	35
Troubleshooting	37
Pressure tests on clutch and high pressure circuit	38
Pressure tests on torque converter and oil cooler hydraulic circuit	39
Test points	40
Assembly instructions	42
Transmission overhaul	45
Special tools	104

87708184B *- 05 - 2009*

PREVIEW - YOUFIXTHIS.COM

Download full manual at youfixthis.com

SAFETY RULES

PAY ATTENTION TO THIS SYMBOL



This warning symbol accompanies important messages involving your safety. Read the safety instructions carefully, and follow the precautions recommended in order to avoid potential risks and safeguard your health and your safety. You will find this symbol in the text of this Manual with the following key words:



WARNING *- Cautions intended to avoid unsuitable repair operations with potential consequences for the safety of the person performing the repair.*

DANGER *- Warnings specifically indicating potential dangers for the safety of the operator or of other persons directly or indirectly involved.*

AVOID ACCIDENTS

Most accidents and injuries that occur in and around workshops are caused by failure to follow some simple and fundamental rule regarding precautionary procedures and safety. Accordingly, IN THE MAJORITY OF CASES, ACCIDENTS CAN BE AVOIDED: it is sufficient simply to foresee the possible causes, and exercise the necessary caution and prudence.

Whatever the type of equipment, and however well designed and built, it is not possible to eliminate the risk of accident completely.

A careful and prudent mechanic is the best insurance against any accident.

The complete observance of this simple rule will of itself be sufficient in avoiding many serious accidents.

DANGER. Never attempt to clean, lubricate or maintain a machine with the engine running.

SAFETY RULES

GENERAL

◊ Follow the specified maintenance and repair procedures carefully.

◊ Do not wear rings, wristwatches, jewellery, and loose or hanging garments, such as: ties, torn clothing, scarves, unbuttoned or unzipped jackets that could become caught and entangled in moving parts: Wear proper safety clothing and protective gear, for example: non-slip footwear, gloves, safety glasses or goggles, hard hats, etc.

◊ Do not perform any service operation on the machine with persons occupying the driver seat, unless these are authorized operators assisting with the work in hand,

◊ Never attempt to operate the machine or its attachments from any position other than seated in the driving position.

◊ Never perform any operation on the machine with the engine running, unless indicated in the manual.

◊ Shut off the engine and make certain that there is no pressure in the hydraulic circuits before removing caps, covers, valves etc.

◊ All service operations must be performed with the utmost care and attention.

◊ Step-ladders and access platforms used in the workshop or in the field must be constructed and maintained in accordance with accident prevention regulations.

◊ Disconnect the batteries and tag all controls to signal that servicing is in progress. Immobilize the machine and any attachment that must be lifted.

◊ Do not check or refill fuel tanks, or top up batteries, or use starting fluid when smoking or near a naked flame, since the fluids in question are flammable.

◊ Brakes are inactive when released manually for servicing purposes: in this situation, keep the machine under control using wheel chocks or similar devices.

◊ The gun of the filler hose must always remain in contact with the tank filler pipe when refuelling. Maintain this contact throughout the refuelling operation so as to avoid any possibility of sparks being generated with the build-up of static electricity.

◊ When towing, use only the designated hitch points. Exercise care when coupling trailed loads: Make sure pins and/or locks are secure before pulling. Stay clear of drawbars, cables or chains under load.

◊ To move a machine when broken down, use a trailer or a low-loader, if available.

◊ When loading/unloading a machine from a transport vehicle, select a level surface affording firm support to the wheels of the truck or trailer. Anchor the machine securely to the bed of the truck or trailer and lock the wheels as specified by the carrier.

PREVIEW - YOUFIXTHIS.COM

Download full manual at youfixthis.com

Undo the transmission pressure switch connection **I1** (1).

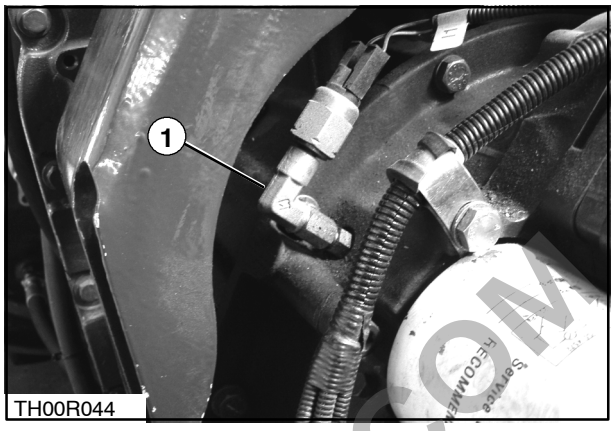

13

Detach the connector **I3** of the engine water temperature sensor (2).

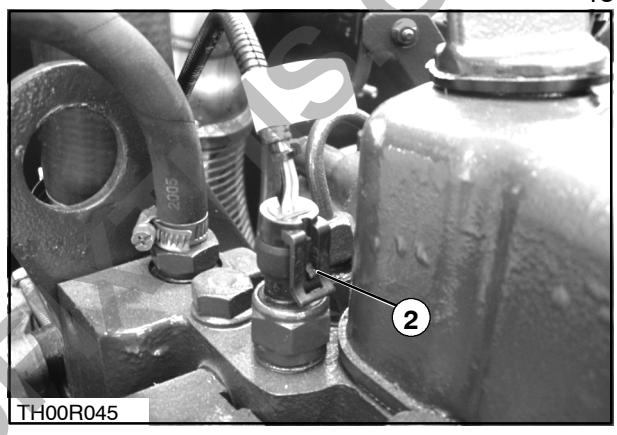

14

Undo the connection **A1.1** for the alternator signal (3) and the connection **A1.2** for the alternator warning light (4).

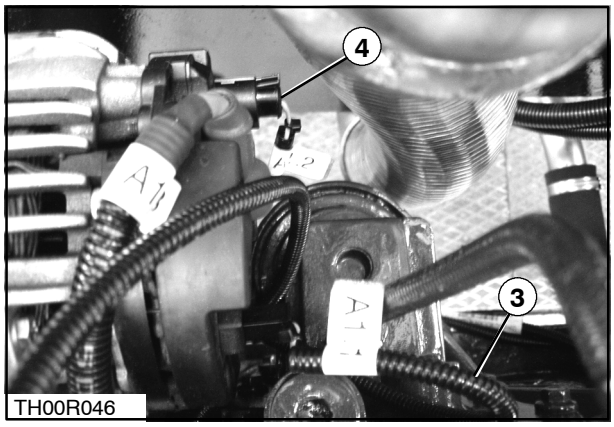

15

Detach the engine starter connection **M1.1** (5) and the battery lead (6) from the starter motor.

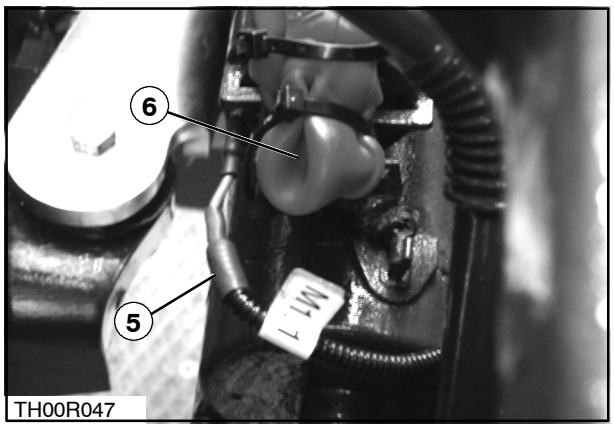

16

PREVIEW - YOUFIXTHIS.COM
Download full manual at youfixthis.com

OPERATION OF TRANSMISSION IN SECOND GEAR FORWARD

A – Reverse clutch
B – Forward clutch
C – 4th speed clutch
D – 3rd speed clutch
E – 1st speed clutch
F – 2nd speed clutch

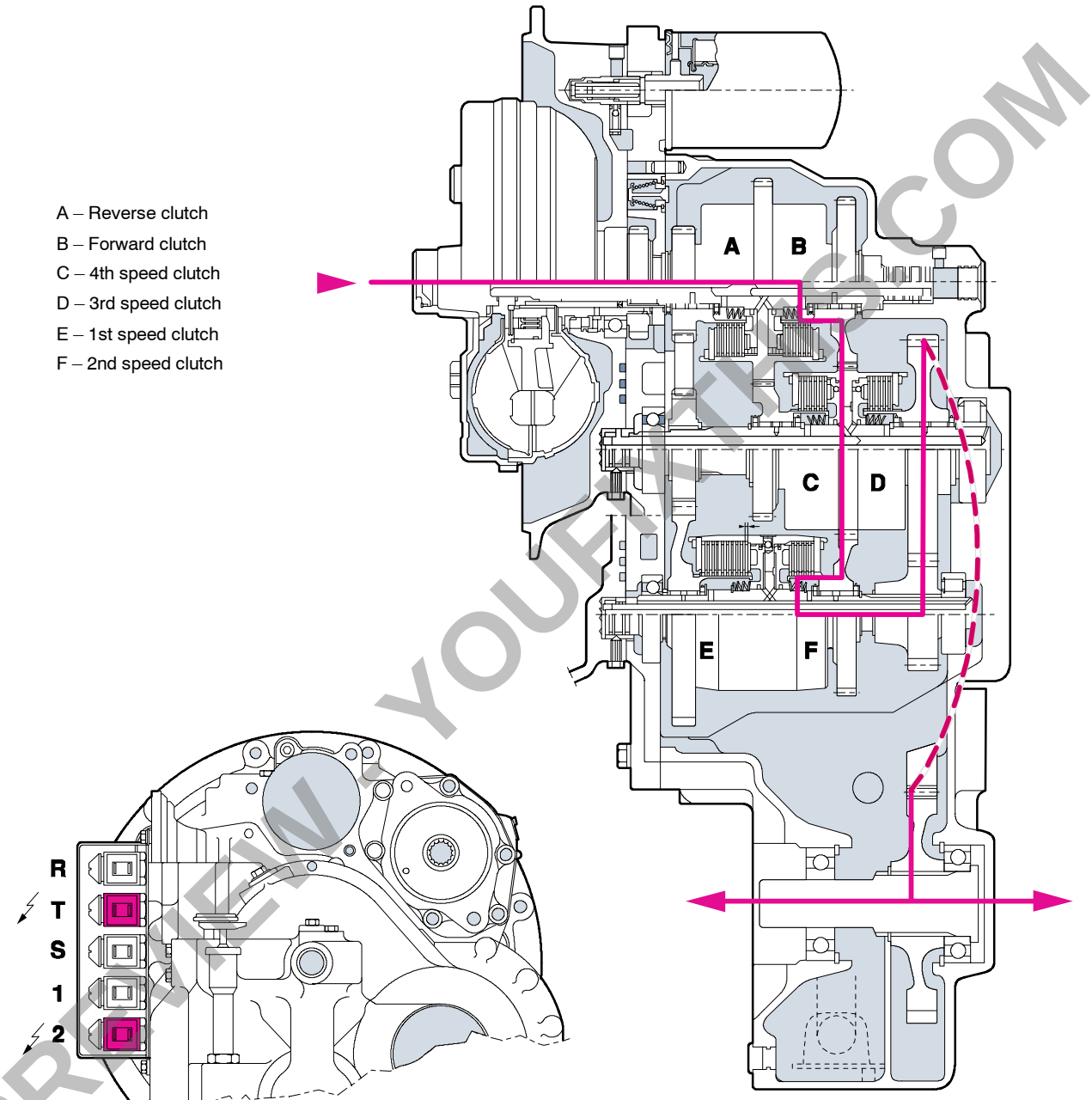

Solenoid valves energized: T and 2

TH121015

21

PREVIEW - YOUFIXTHIS.COM
Download full manual at youfixthis.com

Remove the outer thrust washer, thrust bearing and inner thrust washer.

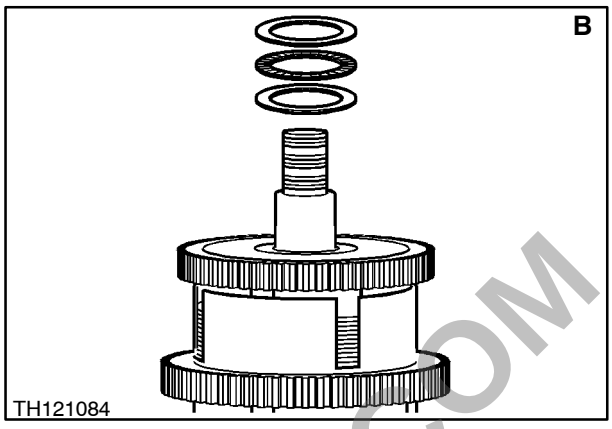

115

Slide off the clutch hub and gear assembly and push out the 2 bearings and spacer.

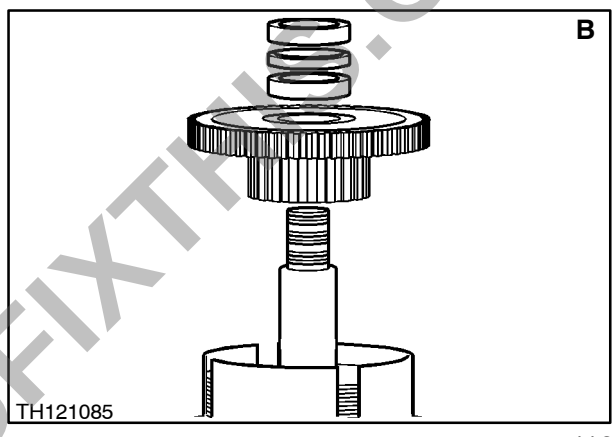

116

Remove the outer thrust washer, thrust bearing and inner thrust washer.

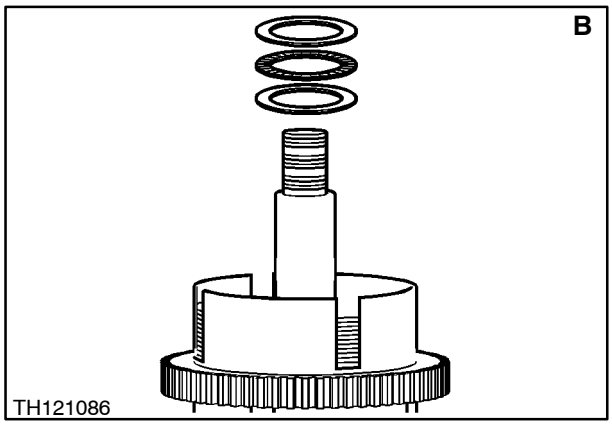

117

Lever out the snap ring retaining the end plate.

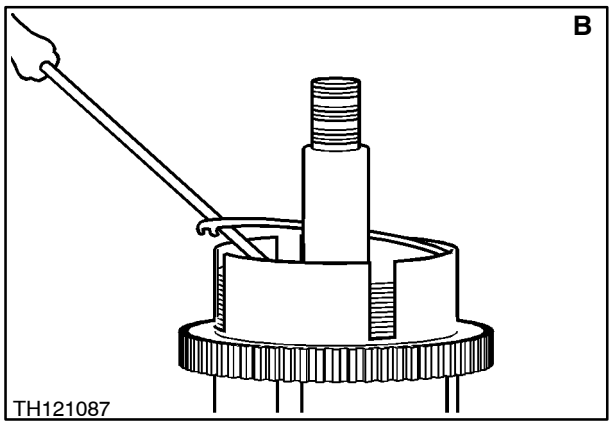

118

PREVIEW - YOUFIXTHIS.COM
Download full manual at youfixthis.com

Install the pump drive gear bearing on the drive shaft.

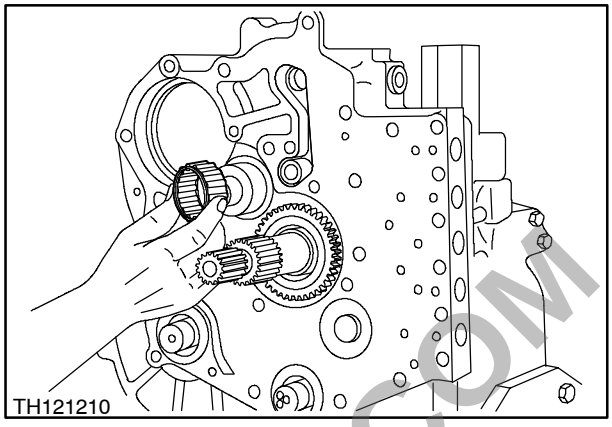

273

Install the pump drive gear on the bearing.

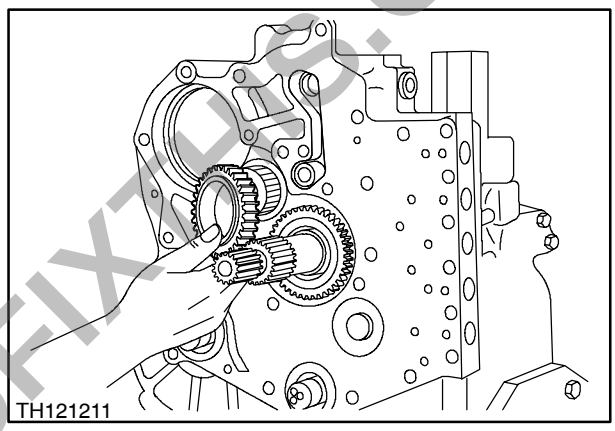

274

Fit the drive gear thrust washer, aligning the hole with the pin.

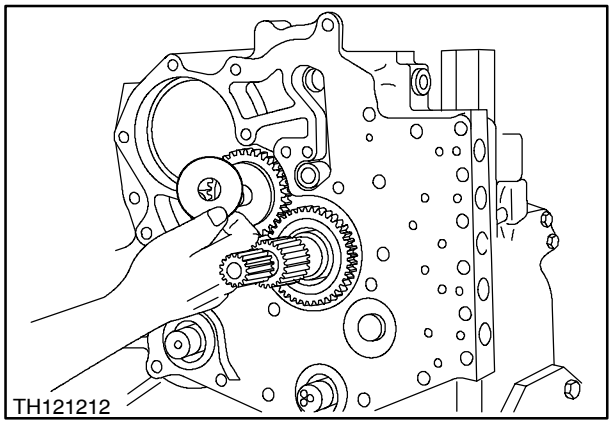

275

With the O-rings in position, fit the solenoid cartridges.

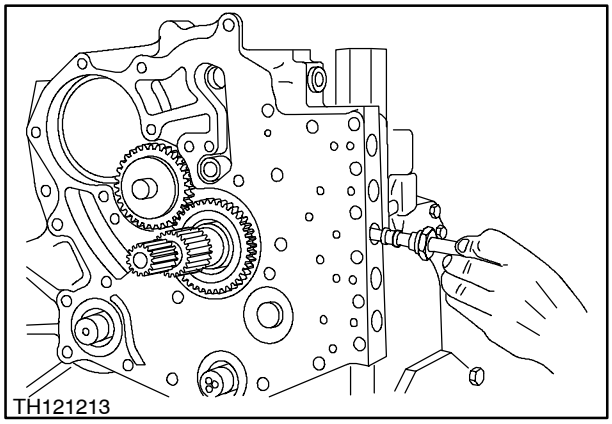

276

PREVIEW - YOUFIXTHIS.COM

Download full manual at youfixthis.com

ADJUSTING THE STEERING ANGLE

NOTE: *Perform the same operations on both sides.*

Loosen the locknut of one of the stop adjusting screws on the cylinder side.

Steer full lock until the stop screw touches the axle stop.

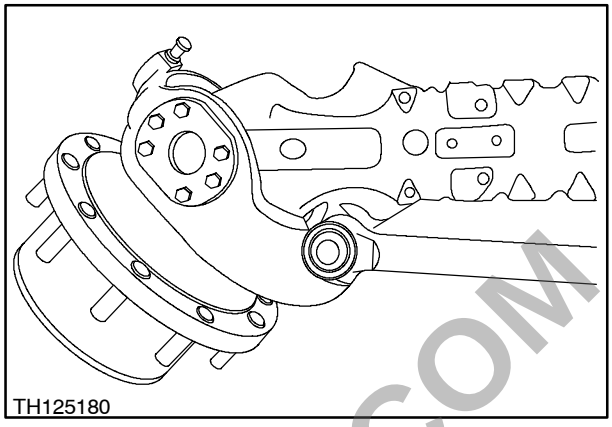

87

On the opposite side, adjust the stop screw so as to bring it exactly in contact, without stress, with the relevant axle stop.

Tighten the locknuts.

Steer full lock in the opposite direction and repeat the same procedure for the other stop screws.

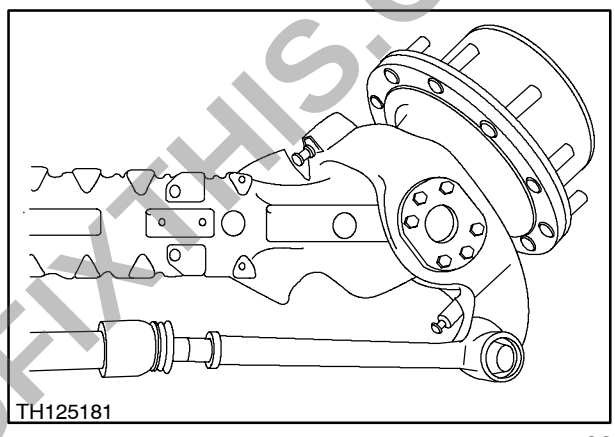

88

IMPORTANT: *At steering lock position, the stop screws must simultaneously touch the axle stops.*

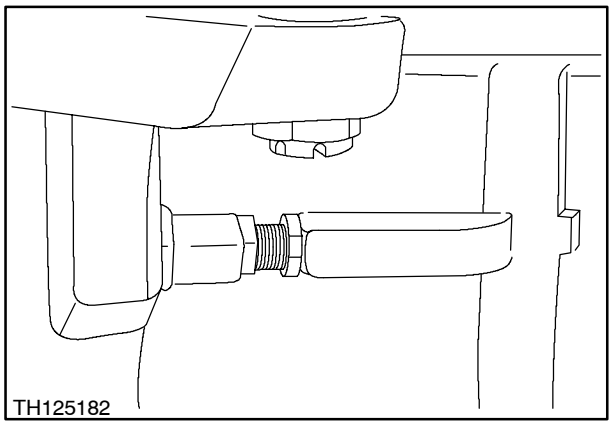

89

PREVIEW - YOUFIXTHIS.COM

Download full manual at youfixthis.com

SECTION 33 - BRAKES

TABLE OF CONTENTS

Section	Description	Page
33 000	Service brakes	2
	Trailer brake	4
	Parking brake	7
	Brake disc adjustment	10
	Troubleshooting	11
	Brakes disassembly	12

TECHNICAL DATA

Brake operation	Hydraulically powered	
Brakes		Wet discs, piston operated
Brake discs	(front axle, per side)	4
	(rear axle, per side)	4

NOTE: *For replacement intervals, oil and lubricant quantity and type for the brake system, refer to the OPERATOR'S MANUAL.*

PREVIEW - YOUFIXTHIS.COM

Download full manual at youfixthis.com

INNER TELESCOPIC CYLINDER

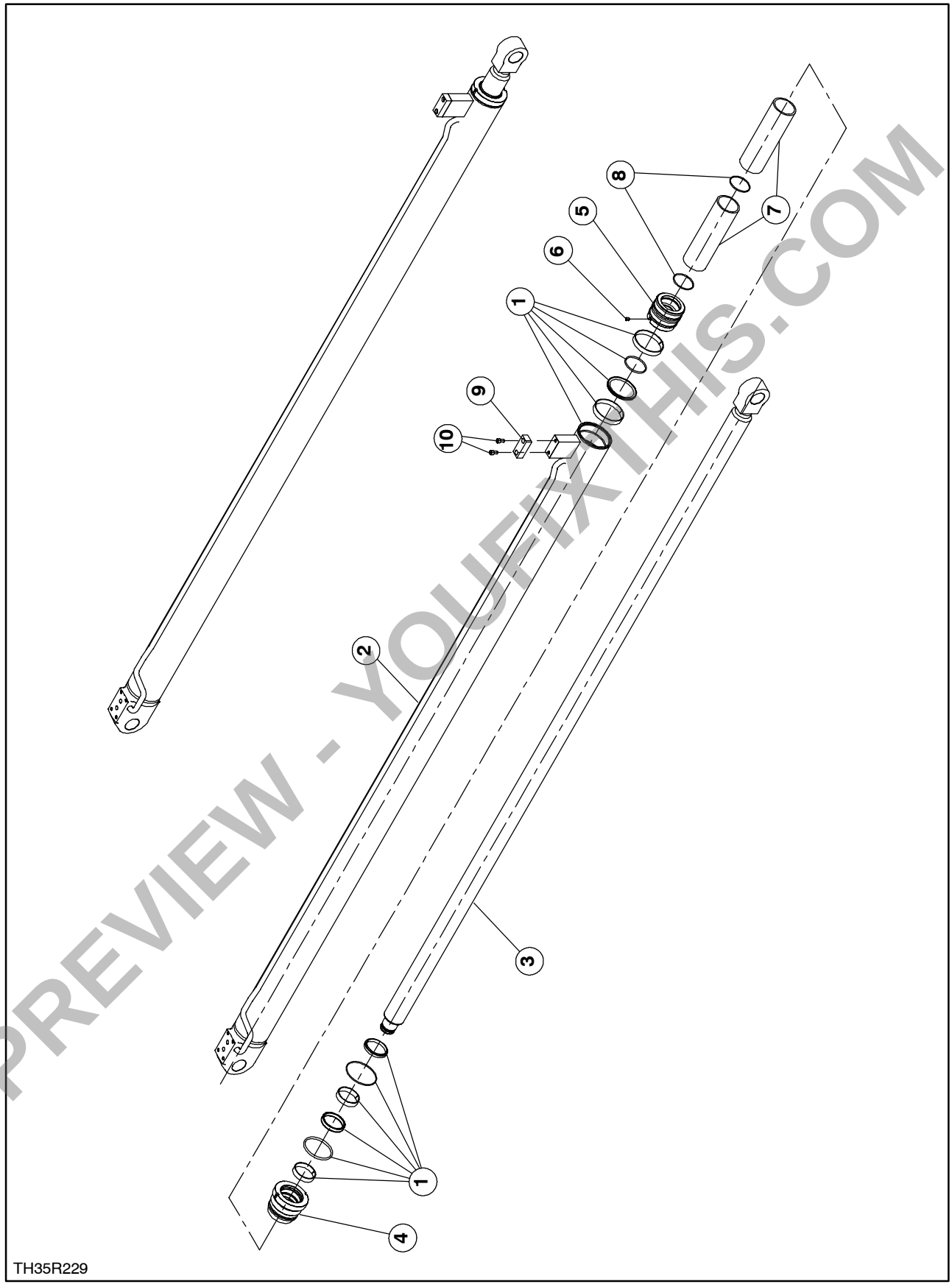

27

PREVIEW - YOUFIXTHIS.COM
Download full manual at youfixthis.com

REVERSIBLE FAN (optional)

Good oil cooler performance, which is extremely important for the engine, depends mainly on the cooling air flow through the radiator elements. A fouled oil cooler reduces the air flow very significantly and therefore impairs the proper operation of this component. The reversible fan makes it possible to clean the oil cooler by inverting the air flow from suction to blowing.

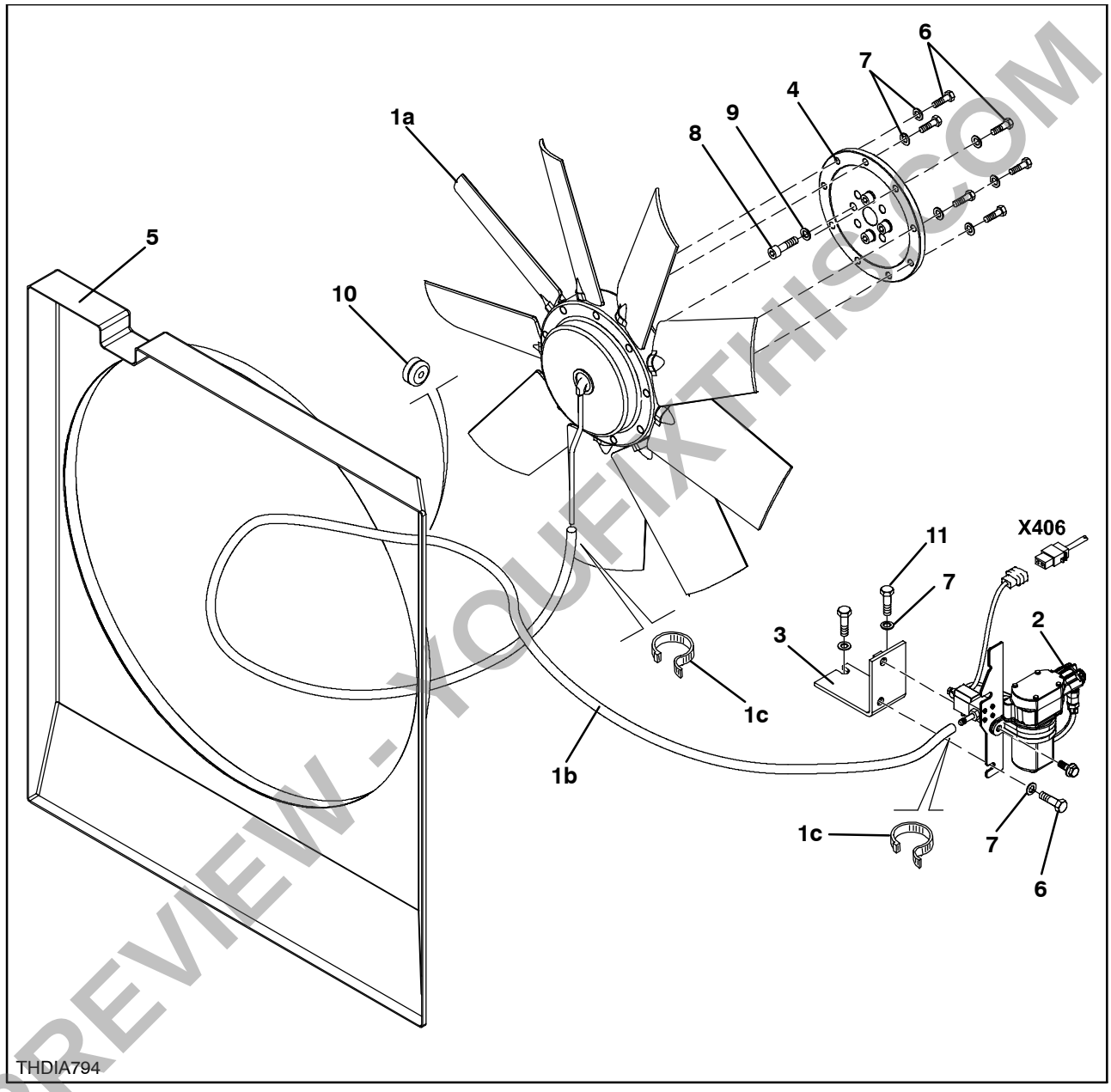

86

Key to components

1a. Reversible fan
1b. Air hose
1c. Clamp
2. Compressor
3. Plate
4. Flange
5. Air shroud
6. M8x1.25x20 screw
7. Ø 8.4 washer
8. M10x50 Hex Soc screw
9. Ø 10 washer
10. Cable gland
11. M8x25 screw

PREVIEW - YOUFIXTHIS.COM
Download full manual at youfixthis.com

DIAGRAM 4 – BOOM CONTROL

COMPONENTS AND FUSES	DESCRIPTION
F12	Extended/retract boom fuse 15A
F16	Optional fuse 10A
F21	In/out option fuse 10A
K4	(OUT) Optional relay
K15	Retract boom retract
K21	(IN) Option relay
S16	Option in/out
S48	Rexroth joystick
Y8	Extended/retract boom EP solenoid valve
Y9	Optional (IN) valve
Y10	Optional (OUT) valve

PREVIEW - YOUFIXTHIS.COM

Download full manual at youfixthis.com

PREVIEW ONLY

You're viewing 17 of 431 pages

The full manual includes:

- All 431 pages, complete
- Searchable PDF (find any keyword)
- No watermarks
- Instant download
- Print-ready quality

GET FULL MANUAL NOW

New Holland LM740 Service Manual

Scan or click anywhere
youfixthis.com

Click anywhere on this page to get the full manual