NEW HOLLAND CONSTRUCTION LW 80

TECHNICAL HANDBOOK

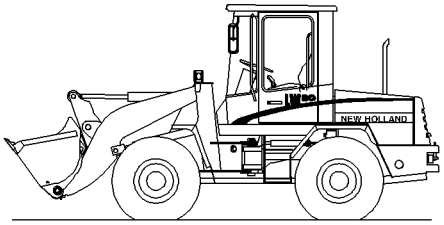

73179332
May 1999

NEW HOLLAND

PREVIEW - YOUFIXTHIS.COM

Download full manual at youfixthis.com

01 GENERAL 1

FOREWORD

Using the Technical Handbook 1

Servicing and repair 1

Warnings and symbols 2

Danger in the event of non-obser-vance of the safety instructions 2

Organizational measures 3

Selection and qualification of personnel - basic responsibilities 4

Safety instructions governing specific operational phases

Standard operation 4

Special work in conjunction with utilization of the machine - maintenance and repairs during operation - disposal of parts and consumables 5

Warning of special dangers

Electric energy 6

Gas, dust, steam and smoke 6

Hydraulic and pneumatic equipment 7

Noise 7

Oil, grease and other chemical substances 7

Transporting and towing - recommissioning 7

Repair work - safety instructions 8

ACCUMULATORS 9

Safety instructions 9

ENGINE 10

Engine - repair instructions 10

Assisted starting (with jumper cables) - safety instructions 10

WELDING OPERATIONS

Welding operations - safety instructions 11

PREVIEW - YOUFIXTHIS.COM

Download full manual at youfixthis.com

⚠ FUNDAMENTAL SAFETY INSTRUCTIONS

Warnings and symbols 2732729

The following signs are used in the manual to designate instructions of particular importance:

⚠ DANGER

Imminent danger involving the risk of death or of severe injuries.

⚠ WARNING

Precautionary rules and measures designed to protect the machine operator and other persons from life-threatening danger or injuries and to prevent extensive damage.

⚠ CAUTION

Information and precautionary measures designed to prevent damage to the machine or other property.

□

Danger in the event of non-observance of the safety instructions 96843

⚠ WARNING

This wheel loader has been built in accordance with state-of-the-art standards and the recognized safety rules.

However, operating the machine if a fault is suspected or has occurred, or carrying out repair work inexpertly may

- **endanger the lives of persons in contact with it**
- **damage the machine and other property.**

The wheel loader must be stopped immediately on any damage being suspected or occurring to ensure that the safety of the operator, of other persons at the place of use or of other material property is not compromised.

All components are carefully co-ordinated. Trouble-free operation and a long service life can only be achieved with original spare parts.

□

PREVIEW - YOUFIXTHIS.COM

Download full manual at youfixthis.com

Engine

2800844

	Unit	LW 80 No. 560 501 -
Manufacturer and model		Perkins 1004.42
Rated output DIN 70 020 (at rated speed)	kW	56
Rated speed (at full load)	rpm	2200
Idling speed	rpm	860
High idling speed	rpm	2350
Firing sequence		1,3,4,2
Direction of rotation		Anti-clockwise when looking at flywheel
Valve clearance: inlet and exhaust (engine cold)	mm / mm inch / inch	0.20 / 0.45 0.008 : 0.018
Compression pressure	bar psi	17.25 : 1 250 : 1
Oil pressure	bar psi	2.8 40.6

PREVIEW - YOUFIXTHIS.COM

Download full manual at youfixthis.com

Service fluids

	LW 80 No. 560 501 -		
	Approx. quantity litres (gal)	**Operating hours between changes**	**Grade[2)]**
Engine (including filter)	9,0[1)] (2.4)	500[2)]	CD SE 15W-40
Fuel tank	100 (25.5)	See Engine Oper. Instruction	
Cooling system	18.5 (5)	2000[7)]	See Engine Oper. Instruction
Hydraulic system	75[1)] (20)	3000[3)]	O&K Multigrade Hydraulic-Oil
Transfer box gearing	1,0[1)] (0.3)	1000[4)]	LS 5-90
Front axle	3,7[1)] (1.0)	1000[4)]	LS 5-90
Rear axle	3,7[1)] (1.0)	1000[4)]	LS 5-90
Axle-planetary gears	4 x 0,6[1)] (4 x 0.16)	1000[4)]	LS 5-90
Lubricating points	2 x for all lube points[6)]	weekly	NLGI-Nr.2[5)]

1) Filling quantities are valid for oil changes and **not** for first filling

2) See Operating Instructions

3) After 3 years at the latest

4) After 1 year at the latest

5) At ambient temperatures below 0˚C (32˚F) use grease NLGI-No. 1 or 0.

6) 0,4 kg (0.9 lbft) - cartridge

7) After 2 years at the latest

PREVIEW - YOUFIXTHIS.COM

Download full manual at youfixthis.com

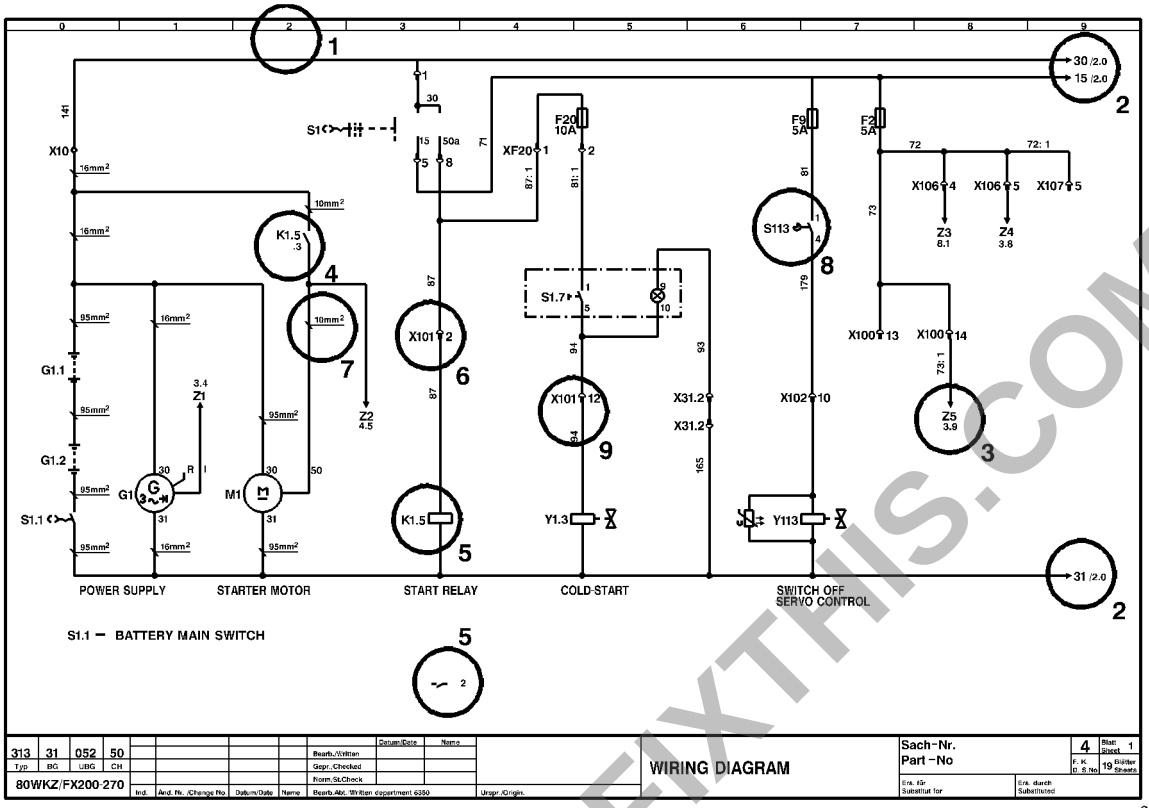

Fig. 2

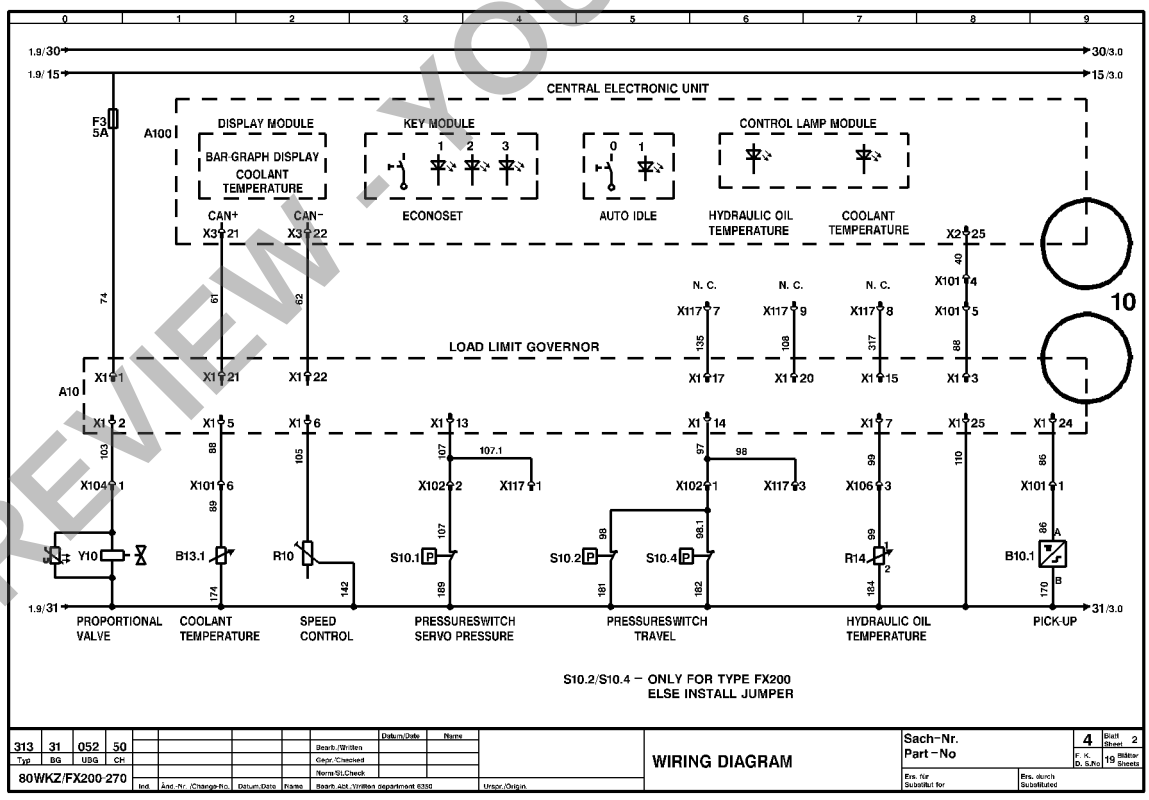

Fig. 3

PREVIEW - YOUFIXTHIS.COM
Download full manual at youfixthis.com

Hydraulic circuit diagram - travel drive

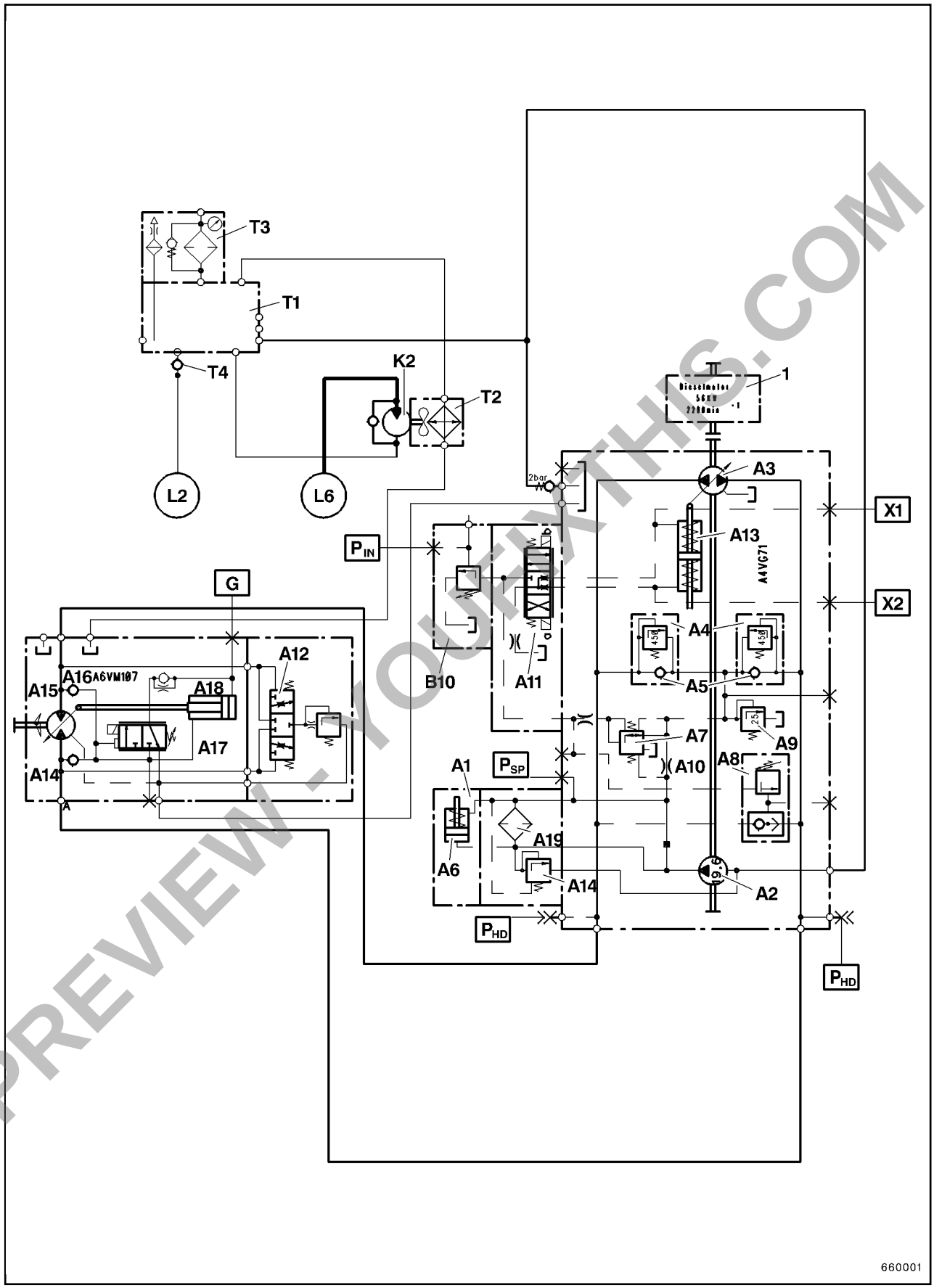

Fig. 2

PREVIEW - YOUFIXTHIS.COM

Download full manual at youfixthis.com

Axle Drive Assembly

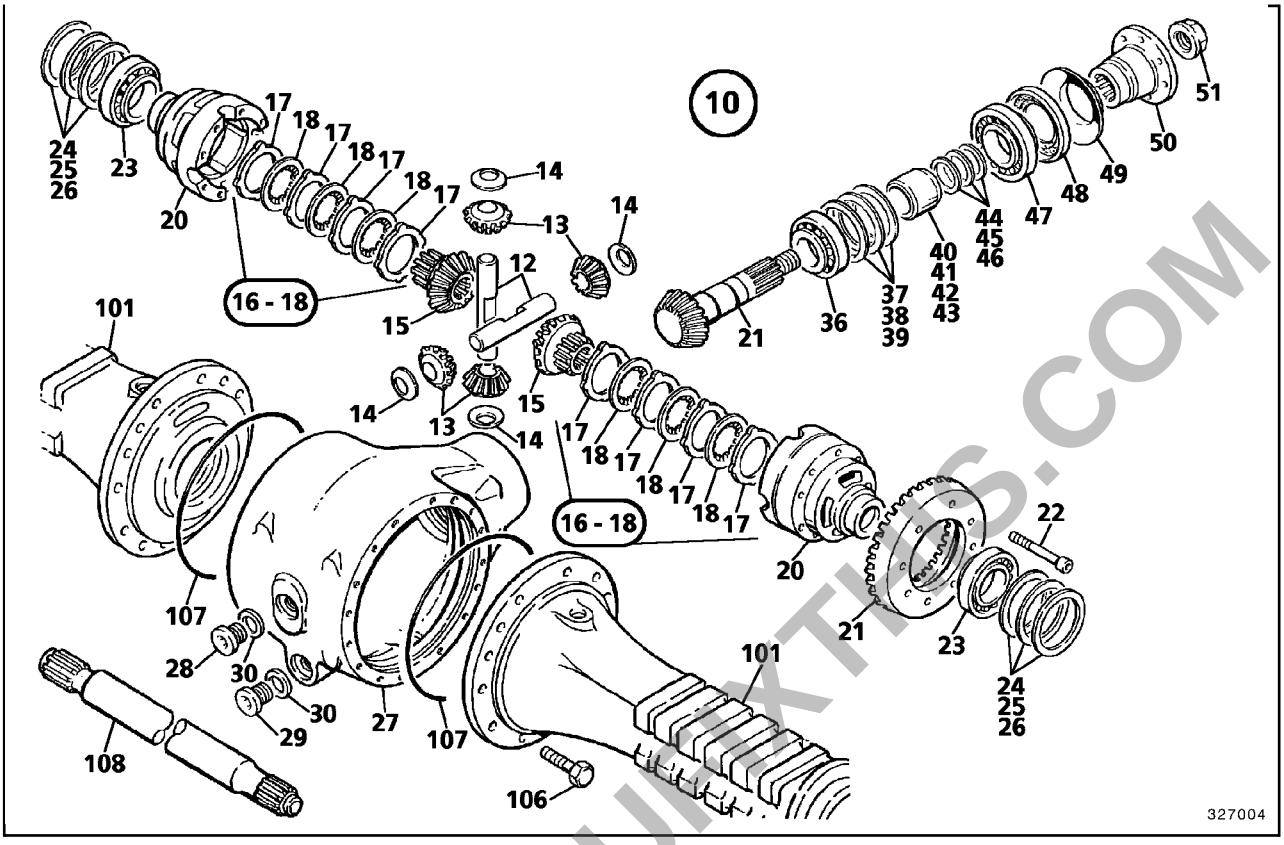

Fig. 2

PREVIEW - YOUFIXTHIS.COM

Download full manual at youfixthis.com

Axle Drive Assembly

Item	Quantity	Description
10	1	Axle drive assembly
12	2	Differential pin
13	4	Bevel gear
14	4	Washer
15	2	Bevel gear
16	2	Disk set
17	10	Outer disk
18	8	Inner disk
20	1	Differential housing
21	1	Bevel gear set
22	12	Fillister-head screw, M 12 - 10.9 M_A = 129 Nm (95 lbft), LOCTITE 243
23	2	Tapered roller bearing
24		Spacing washer, 0.1 mm
25		Spacing washer, 0.3 mm
26		Spacing washer, 0.5 mm
27	1	Housing
28	1	Cap screw
29	1	Cap screw
30	2	Packing ring
36	1	Tapered roller bearing
37		Spacing washer, 0.1 mm
38		Spacing washer, 0.3 mm
39		Spacing washer, 0.5 mm
40	1	Liner
41	1	Liner
42	1	Liner
43	1	Liner
44		Spacing washer, 0.1 mm
45		Spacing washer, 0.3 mm
46		Spacing washer, 0.5 mm
47	1	Tapered roller bearing
48	1	Shaft ring
49	1	Cap
50	1	Flange
51	1	Collar unit M_A = 200 Nm (148 lbft), LOCTITE 243

PREVIEW - YOUFIXTHIS.COM

Download full manual at youfixthis.com

Schrauben mit Regelgewinde nach DIN 13 - 13
Bolts with standard thread DIN 13 - 13

Gewinde-Nenn Ø Thread nominal Ø	Festigkeits-klasse Material quality	Anziehdrehmomente M_A in Nm Tightening torques M_A in Nm		
		gesamt total 0,10[1)]	gesamt total 0,12[2)]	gesamt total 0,16 (L)[3)]
M 5	8.8 10.9 12.9	4,9 7,3 8,5	5,5 8,1 9,5	6,5 9,5 11,2
M 6	8.8 10.9 12.9	8,5 12,5 14,5	9,5 14 16,5	11,2 16,5 19,5
M 8	8.8 10.9 12.9	20,5 30 35	23 34 40	27 40 47
M 10	8.8 10.9 12.9	41 60 71	46 68 79	55 80 94
M 12	8.8 10.9 12.9	71 104 195	79 117 215	94 140 260
M 16	8.8 10.9 12.9	170 250 300	195 280 330	230 340 400
M 20	8.8 10.9 12.9	350 490 580	390 560 650	470 670 780
M 24	8.8 10.9 12.9	600 850 1000	670 960 1120	800 1140 1350
M 30	8.8 10.9 12.9	1190 1700 2000	1350 1900 2250	1600 2300 2700
M 36	8.8 10.9 12.9	2100 3000 3500	2350 3300 3900	2800 4000 4700

[1)] Schraube und/oder Mutter galvanisch verzinkt (A3B).
Screw and/or nut electro-galvanized.

[2)] Schraube schwarz vergütet oder phosphatiert, Gewinde geölt.
Screw black-plated or phosphatized, thread oiled.

[3)] Schrauben mit flüssiger Schraubensicherung z.B. Loctite 242, 243.
Screws with liquid screw fixer, e.g. Loctite 242, 243.

PREVIEW - YOUFIXTHIS.COM

Download full manual at youfixthis.com

Troubleshooting

Trouble	Cause	Remedy
1. Acid level too low	Overcharging, evaporation (particularly during the summer months)	Top up with distilled or demineralized water (when the battery is charged)
2. Acid leaks out of the vent plug	1. Charging voltage too high	Check and adjust voltage regulator or have it replaced
	2. Acid level too high	Draw off excessive acid with the hydrometer
3. Acid density too low	1. Battery discharged	Charge the battery
	2. Alternator malfunction	Have alternator checked
	3. Short-circuit in wiring	Have electrical system checked
	4. Too much water in acid due to incorrect servicing	Have acid density re-adjusted
4. Acid density too high	Too much acid	Have acid density adjusted
5. Battery output power insufficient. Heavy voltage drop	1. Battery discharged	Recharge battery
	2. Charging voltage too low	Re-adjust or replace voltage regulator
	3. Connection terminals loose or corroded	Clean terminals and apply a thin layer of acid-protection grease Ft 40 v 1 on the underside; tighten terminal screws
	4. Battery capacity insufficient (too many consumers)	Use greater battery. If required, install also stronger alternator; consult specialized workshops
	5. Excessive self-discharge of the batteries due to impurities in the battery acid	Replace the battery
	6. Battery "sulphated" (grey-white layer on the positive and negative plates)	Charge battery with low current to induce decomposition of the layer. If the output is still insufficient after repeated charging and discharging, replace the battery
	7. Battery used up, plate substance no longer active	Replace the battery
	8. Acid level below upper edge of plates	Top up with distilled or de-mineralized water to the prescribed level

PREVIEW - YOUFIXTHIS.COM

Download full manual at youfixthis.com

Dismantling and Reassembling the Axles

Dismantling

- Slacken wheel nuts (141, Fig. 1 + 2).
- Lift loader and support safely. Drop bucket onto ground.
- Take off wheels.
- Remove propeller shaft.
- Move fork-lift truck under axle from the side, lift and jack up axle.

Front Axle:

- Remove two screw clips (142 - 144, Fig. 1).

Rear Axle:

- Disconnect hydraulic motor (201, Fig. 2) flange and suspend.
- Loosen parking brake bowden cable.
- Unscrew service brake pipings (202) and close openings.
- Unscrew self-aligning bearing lubrication piping (203, 204).
- Extract pin (145).
- Lower fork-lift truck and pull out axle.

Reassembling

- Reassemble the axles in the reverse order.
- Successively fill oil into wheel hubs, transfer box (rear axle only) and axle drive assembly. Refer to Operating Instructions.
- Vent brake assembly.
- After adjusting parking brake, tighten brake lever screws (93).
  Tightening torque M_A = 26 Nm (19 lbft).
- Lubricate self-aligning bearing (rear axle only).

PREVIEW - YOUFIXTHIS.COM

Download full manual at youfixthis.com

01 GENERAL

FOREWORD

2801062

This **Technical Handbook (THB)** has been written with **the servicing mechanic** in mind and contains important information required to carry out repair and servicing procedures.

Read through the **Technical Handbook**, but also the **Operating Instructions** for the **NEW HOLLAND CONSTRUCTION Wheel Loader** before commencing any servicing or repair work. The **Technical Handbook**, as well as the **Operating Instructions** and **Spare Parts List** should be used as a source of reference and assistance - even when the user is well acquainted with the range of NEW HOLLAND CONSTRUCTION Wheel Loaders.

Using the Technical Handbook allows the experienced mechanic to carry out repair work in a correct manner.

Using the Technical Handbook

The Technical Handbook is divided into main and sub-groups that deal with the machine as actually delivered. Any auxiliary attachments or optional upgrading introduced later are not described.

The main table of contents allows to find the required information quickly.

For the sake of clarity, the illustrations have been simplified and can therefore differ slightly from the actual appearance of the machine.

Servicing and repair

Servicing and repair work should be carried out as soon as possible. This keeps overall servicing & repair costs to a minimum and increases the availabilily of the NEW HOLLAND CONSTRUCTION Wheel Loader.

During servicing and repair work, always follow the instructions contained in the Technical Handbook and Operating instructions.

The **NEW HOLLAND CONSTRUCTION After Sales Service** is always available for assistance and advice.

□

PREVIEW - YOUFIXTHIS.COM

Download full manual at youfixthis.com

Kraftstoffverbrauch
Fuel consumption

1 g / PS h	=	1,3596 g / kW h	1 g / kW h	=	0,7355 g / PS h
1 lb / HP H	=	608,277 g / kW h	1 g / kW h	=	0,001644 lb / HP H
1 liq pt / HP H	=	634,545 cm^3 / kW h	1 cm^3 / kW h	=	0,001576 liq pt / HP H
1 pt (UK) HP H	=	762,049 cm^3 / kW h	1 cm^3 / kW h	=	0,001312 pt (UK) / HP H

Umrechnung von Conversion for			Umrechnung von Conversion for				Umrechnung von Conversion for	
	g/PS h	g/kW h		lb HP H	liq pt HP H	pt (UK) HP H	miles gal (US)	miles gal (UK)
	in g / kW h	in g / PS h		in g / kW h	in cm^3 / kW h	in cm^3 / kW h	in l / 100 km	in l / 100 km
100	136,0	73,55	0,10	60,83	63,45	76,20	10	23,5	28,2
120	163,2	88,26	0,15	91,24	95,18	114,3	11	21,4	25,7
140	190,3	103,0					12	19,6	23,5
160	217,5	117,7	0,20	121,7	126,9	152,4	13	18,1	21,7
180	244,7	132,4	0,25	152,1	158,6	190,5	14	16,8	20,2
200	271,9	147,1	0,30	182,5	190,4	228,6	15	15,7	18,8
220	299,1	161,8	0,32	194,6	203,1	243,9	16	14,7	17,7
240	326,3	176,5	0,34	206,8	215,7	259,1	17	13,8	16,6
260	353,5	191,2	0,36	219,0	228,4	274,3	18	13,1	15,7
280	380,7	205,9	0,38	231,1	241,1	289,6	19	12,4	14,9
300	407,9	220,6	0,40	243,3	253,8	304,8	20	11,8	14,1
320	435,1	235,4	0,42	255,5	266,5	320,1	22	10,7	12,8
340	462,3	250,1	0,44	276,6	279,2	335,3	24	9,80	11,8
360	489,5	264,8	0,46	279,8	291,9	350,5	26	9,05	10,9
380	516,6	279,5	0,48	292,0	304,6	365,8	28	8,40	10,1
400	543,8	294,2	0,50	304,1	317,3	381,0	30	7,84	9,42
420	571,0	308,9	0,52	316,3	330,0	396,3	32	7,35	8,83
440	598,2	323,6	0,54	328,5	342,7	411,5	34	6,92	8,31
460	625,4	338,3	0,56	340,6	355,3	426,7	36	6,53	7,85
480	652,6	353,0	0,58	352,8	368,0	442,0	38	6,19	7,43
500	679,8	367,7	0,60	365,0	380,7	457,2	40	5,89	7,06
520	707,0	382,5	0,62	377,1	393,4	472,5	42	5,60	6,73
540	734,2	397,2	0,64	389,3	406,1	487,7	44	5,35	6,42
560	761,4	411,9	0,66	401,5	418,8	503,0	46	5,11	6,14
580	788,6	426,6	0,68	413,6	431,5	518,2	48	4,90	5,88
600	815,8	441,3	0,70	425,8	444,2	533,4	50	4,70	5,65
650	883,7	478,1	0,75	456,2	475,9	571,5	55	4,28	5,14
700	951,7	514,8	0,80	486,6	507,6	609,6	60	3,92	4,71
750	1020	551,6	0,85	517,0	539,4	647,7	70	3,36	4,04
800	1088	588,4	0,90	547,4	571,1	685,8	80	2,94	3,53
900	1224	661,9	0,95	577,9	602,8	723,9	90	2,61	3,14

Beispiel:
Example:
240 g / PS h = 326,3 g / kW h

Beispiel:
Example:
0,68 liq pt / HP H = 431,5 cm^3 / kW h

Beispiel:
Example:
18 miles / gal (US) = 13,1 l / 100 km

PREVIEW - YOUFIXTHIS.COM

Download full manual at youfixthis.com

Switching valve (A11), electromagnetically activated

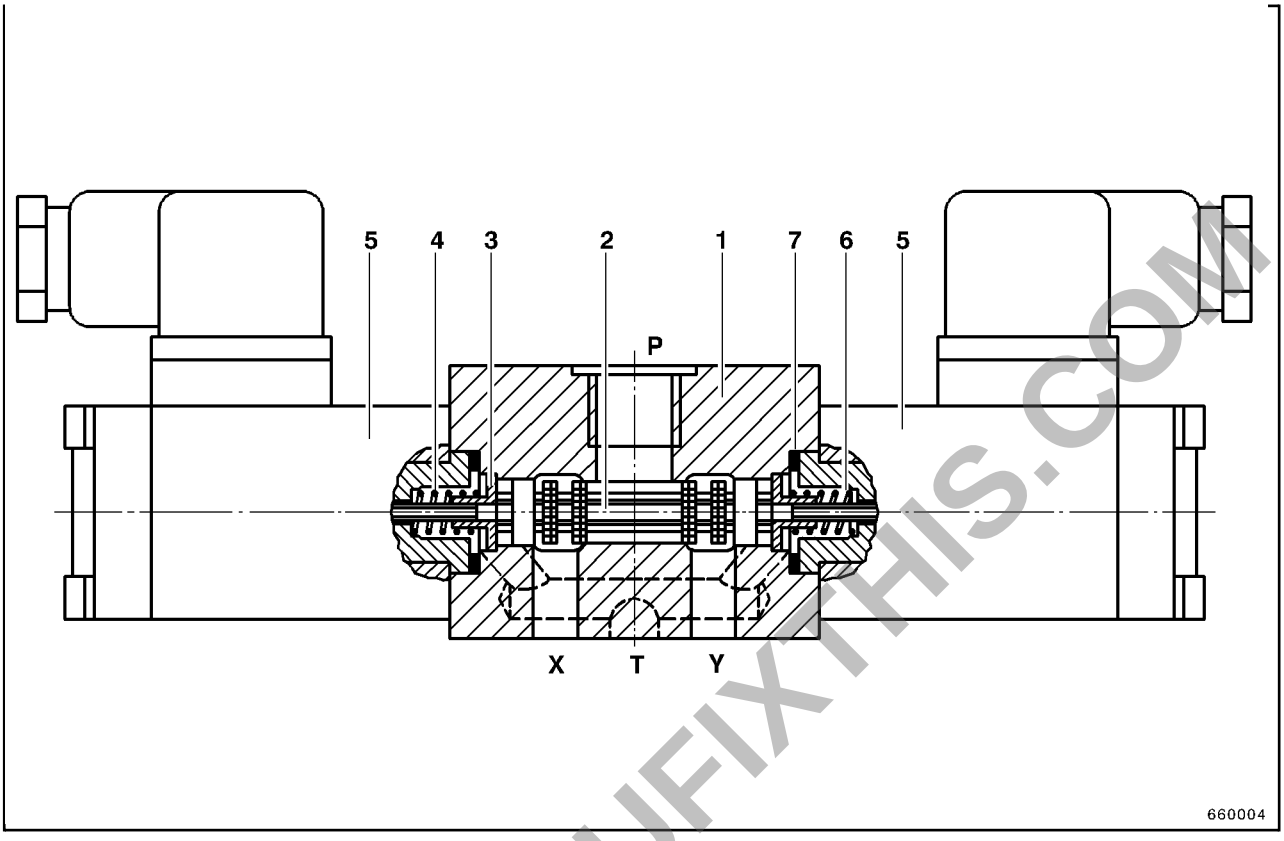

Fig. 9

Parts Fig. 9

1 - Housing
2 - Control piston
3 - Spring plate
4 - Spring
5 - Magnet
6 - Tappet
7 - Gasket

□

PREVIEW - YOUFIXTHIS.COM

Download full manual at youfixthis.com

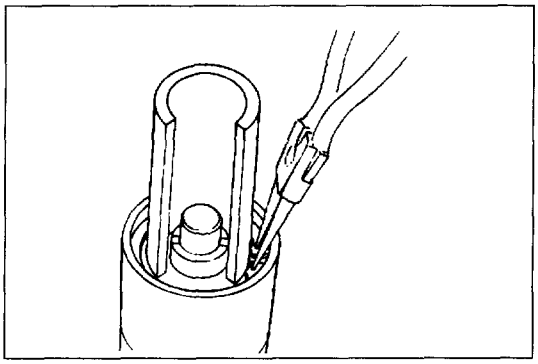

79 Stellkolben montieren.
Hinweis:
Auf korrekten Sitz der geteilten Ringe "achten".

Assemble positioning piston.
Instruction:
Observe correct fit of the divided rings.

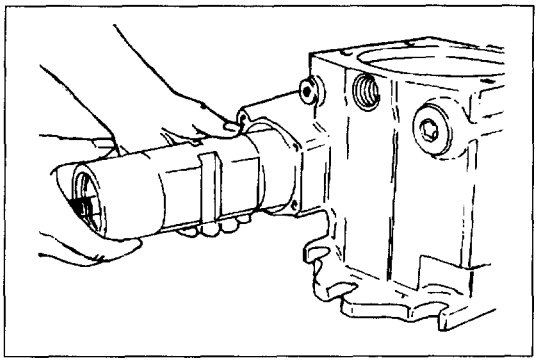

80 Stellkolben ins Gehäuse einsetzen.
Hinweis:
Stellkolben vor Einbau einölen.

Insert positioning piston into the housing.
Instruction:
Oil positioning piston before assembly.

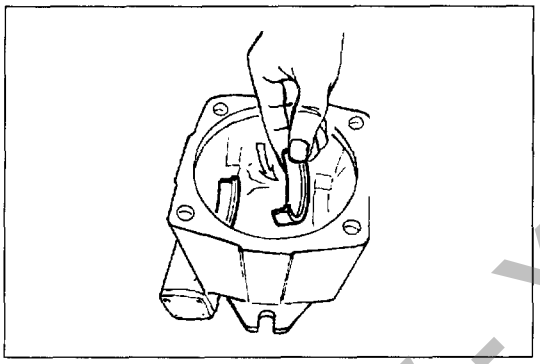

81 Lagerschalenpaar einsetzen.

Insert bearing cup set.

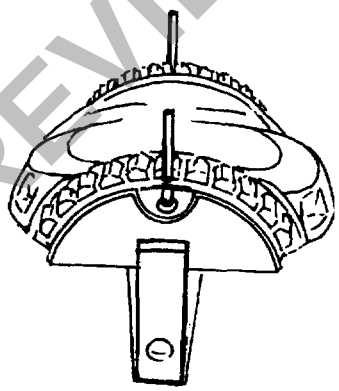

Lager, Draht, Gleitstein und Gelenkstift
montieren.
Montagehilfe: z.B. - Klammer / Gummiringe / Fett

Assemble bearing, wire, gliding stone
and articulating pin.
Assistance: Devices e.g. - Clamp / rubber rings / grease

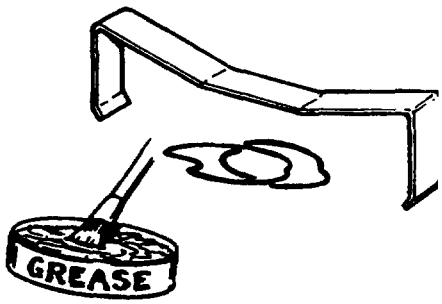

82

PREVIEW - YOUFIXTHIS.COM

Download full manual at youfixthis.com

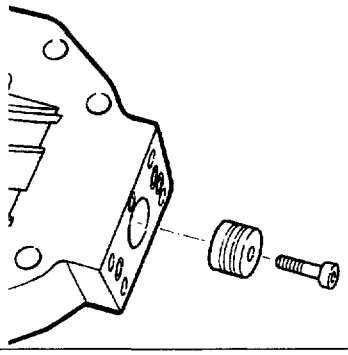

33 Kolben mit Kolbenring ausbauen.

Remove piston with piston ring

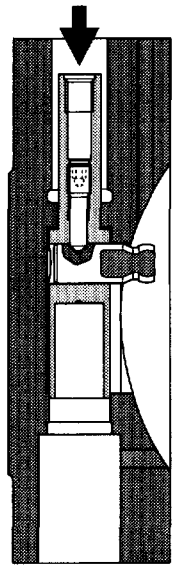

34 Gleichgangkolben

Befestigungsschraube für Stellzapfen über Bohrung erwärmen. (Schraube geklebt - herausdrehen)

- Neue Schraube verwenden
- Precote Beschichtung
- ⚠ Anziehdrehmomente beachten!

Synchronizing piston

Warm up fixation screw for positioning plug via boring (screw glued - to turn out).

- Use new screw.
- Precote coating.
- ⚠ Note tightening torque!

35

PREVIEW - YOUFIXTHIS.COM

Download full manual at youfixthis.com

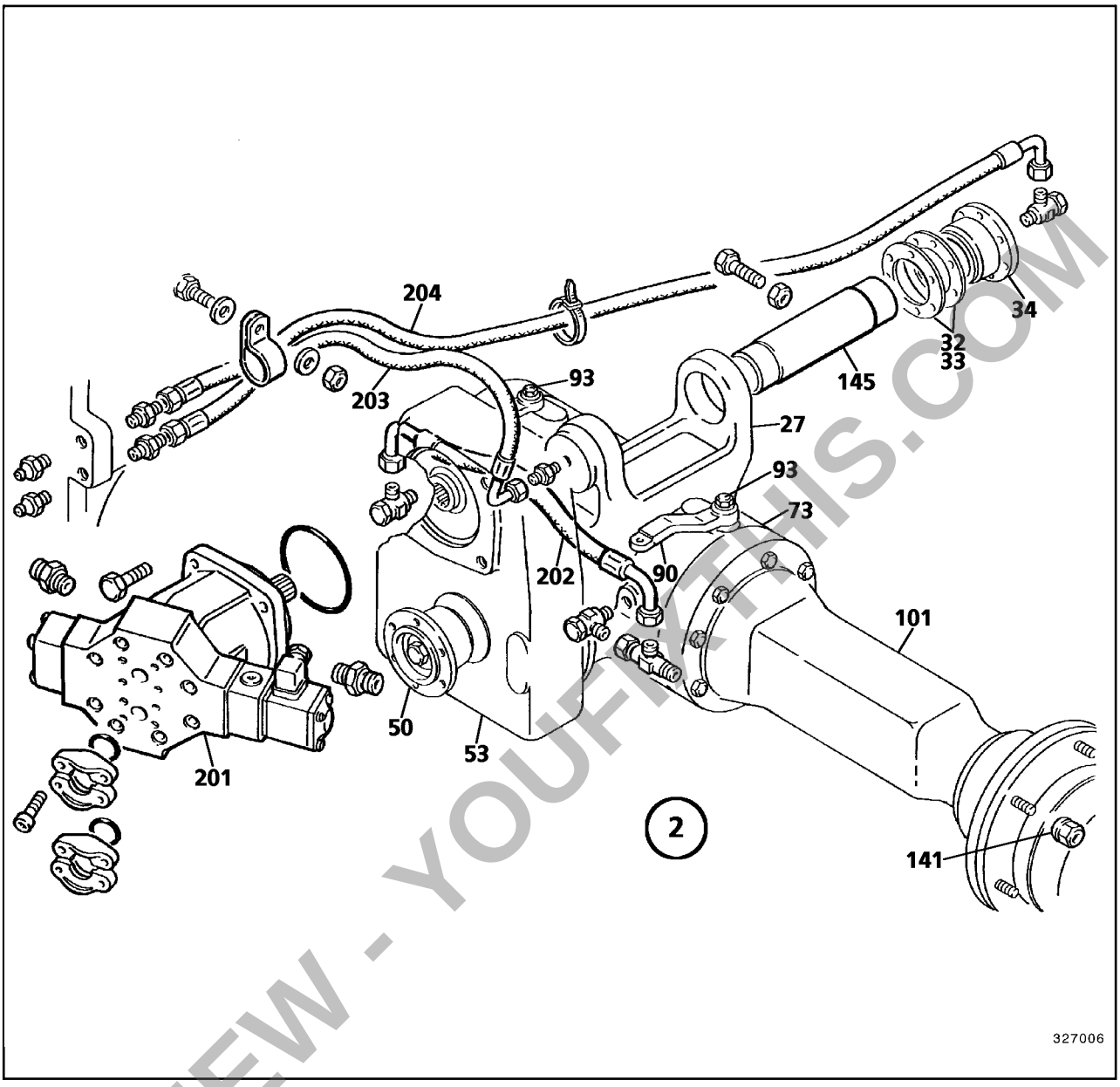

Fig. 2

PREVIEW - YOUFIXTHIS.COM

Download full manual at youfixthis.com

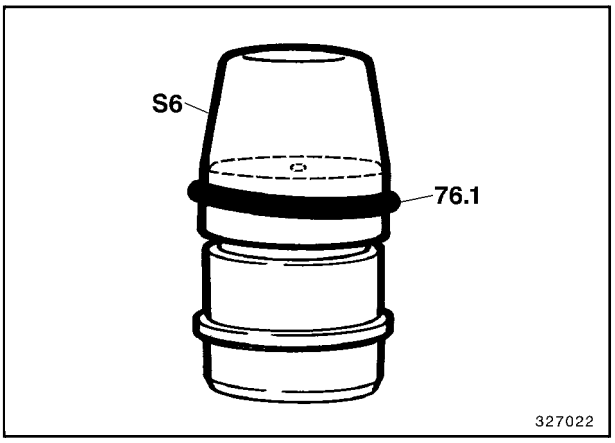

Fig. 4

Put on short mounting sleeve (S6) and insert O-ring (76.1) twist-free into upper piston groove.

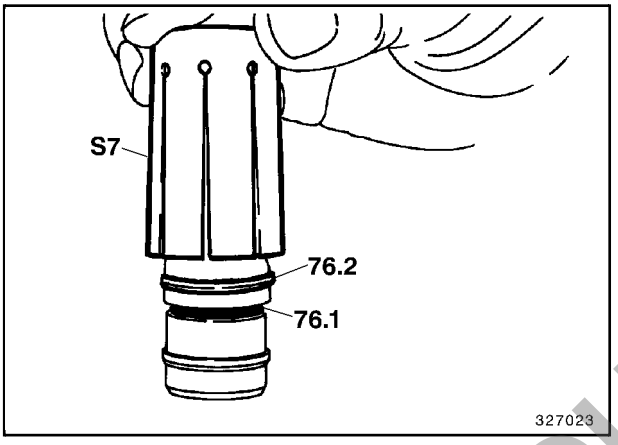

Fig. 5

Push piston seal (76.2) into groove using expansion sleeve (S7).

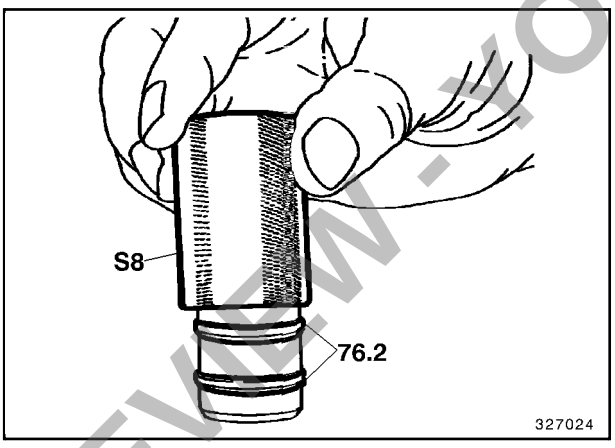

Fig. 6

Slightly lubricate piston seals with hydraulic oil.

Push sizing sleeve (S8) over both piston seals

Leave piston in sleeve for about 5 minutes.

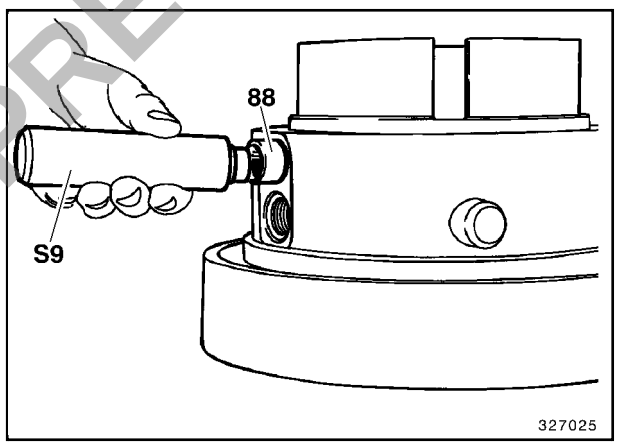

Fig. 7

Drive needle sleeve (88) into brake carrier. Packing ring in needle sleeve to be on outer side.

PREVIEW - YOUFIXTHIS.COM

Download full manual at youfixthis.com

Steering valve (L2)

2800935

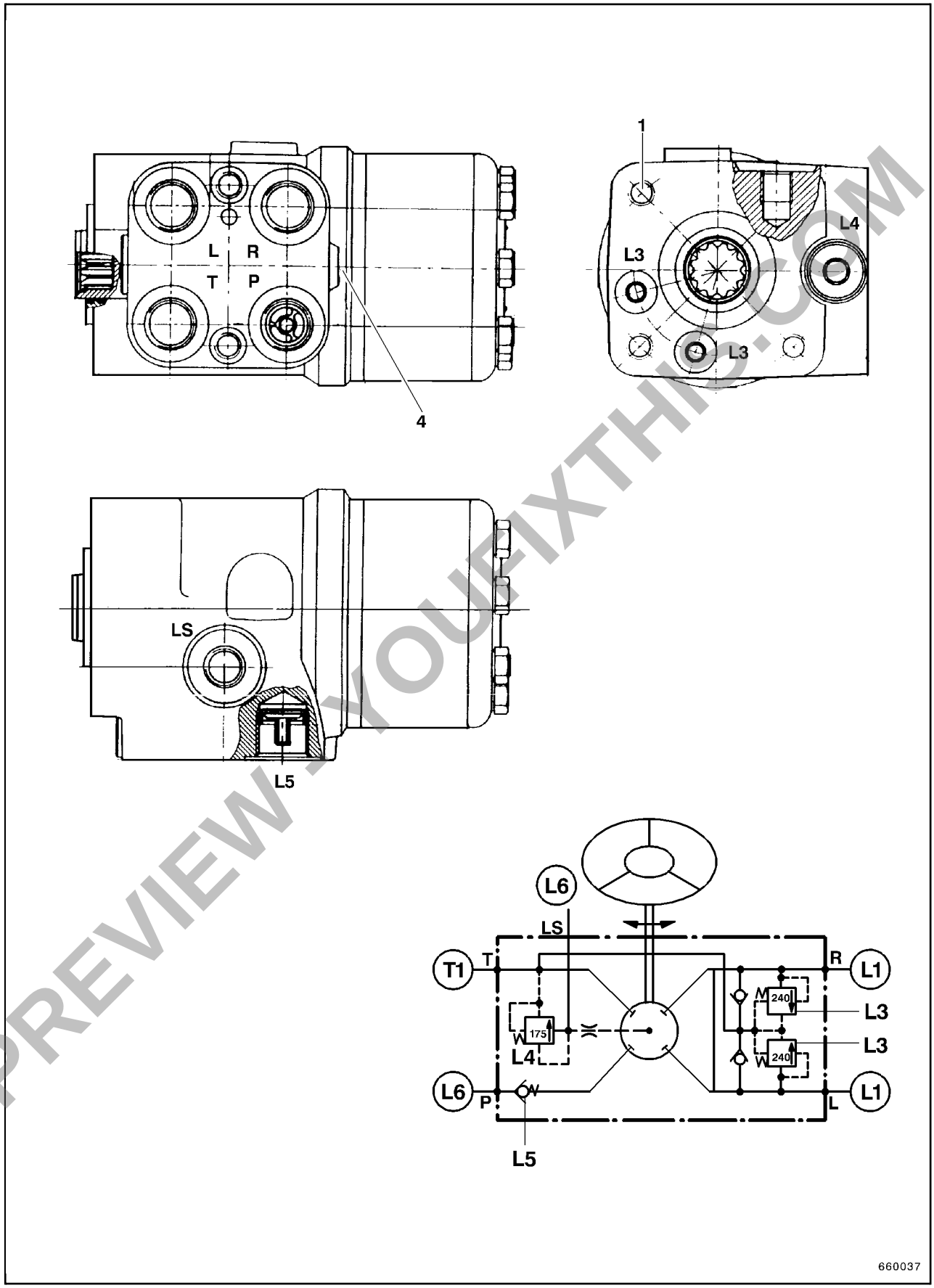

Fig. 7

PREVIEW - YOUFIXTHIS.COM

Download full manual at youfixthis.com

Dumping cylinder (H2)

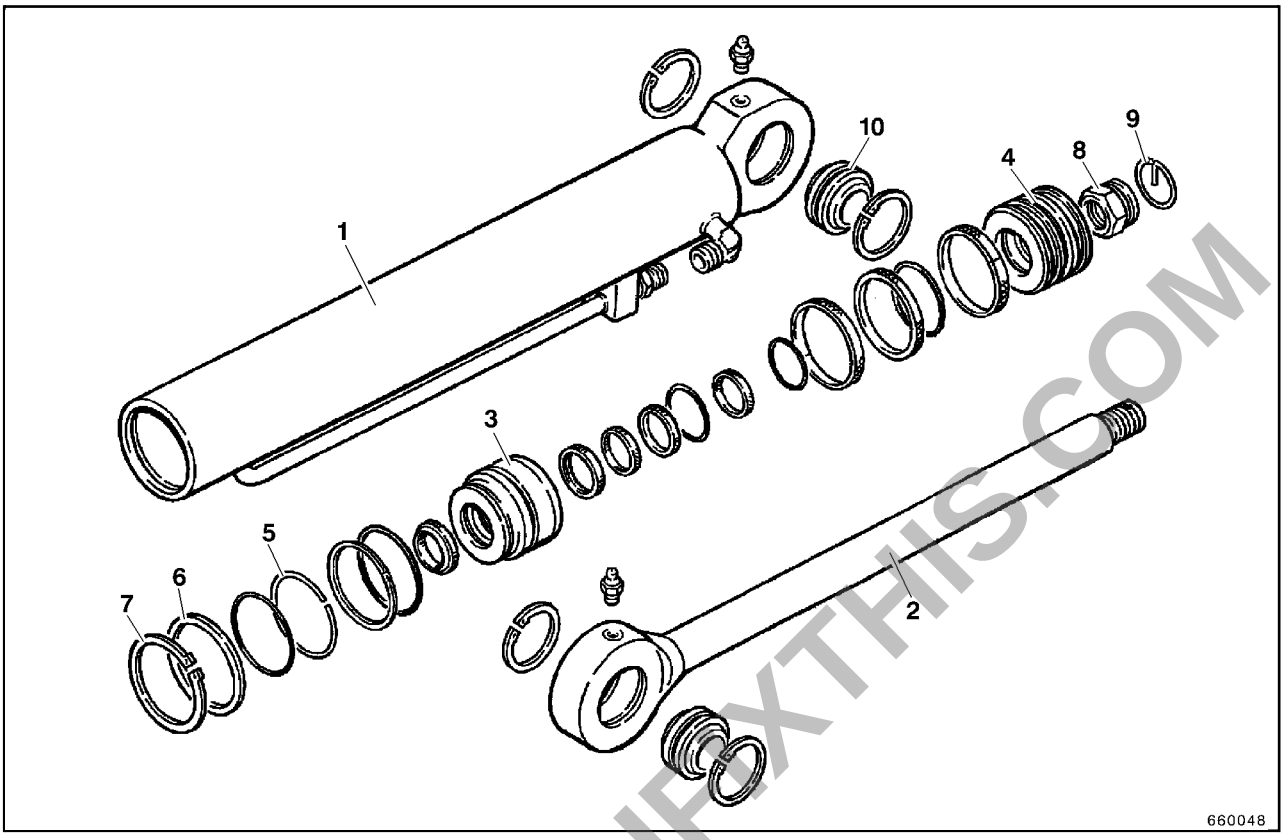

Fig. 7

Parts Fig. 7

1 - Cylinder
2 - Piston rod
3 - Guide
4 - Piston
5 - Round circlip
6 - Supporting plate
7 - Circlip
8 - Hexagon nut M_A = 1000 Nm (738 lbft), M 36 x 1.5
9 - Hooked circlip
10 - Pivot bearing

Technical data

Piston	:	100 mm (39.37 inch)
Rod	:	50 mm (1.97 inch)
Stroke	:	430 mm (16.93 inch)
Oil connections	:	ASW 15 L DIN 3853
Connection thread	:	M 22 x 1.5

PREVIEW - YOUFIXTHIS.COM

Download full manual at youfixthis.com

Checking the vehicle starter system

Checking the battery (cf. under "Battery").
Checking the battery cables and connections for proper contact.
Measuring the voltage drop (0.5 V).
Measuring the minimum pull-in voltage at solenoid switch terminal 50 (8.0 V).

Starter

1 - Armature-return spring
2 - Hold-in winding
3 - Pull-in winding
4 - Starting motor solenoid
5 - Contact
6 - Mounting stud
7 - Contact bridge
8 - Collector bearing
9 - Brush spring
10 - Collector
11 - Carbon brush
12 - Pole housing
13 - Pole shoe
14 - Armature
15 - Exciter winding
16 - Armature winding
17 - Guide ring
18 - Stop
19 - Roller-type overrunning clutch
20 - Armature shaft
21 - Pinion
22 - Driver
23 - Brake disk
24 - Engaging spring
25 - Engaging lever

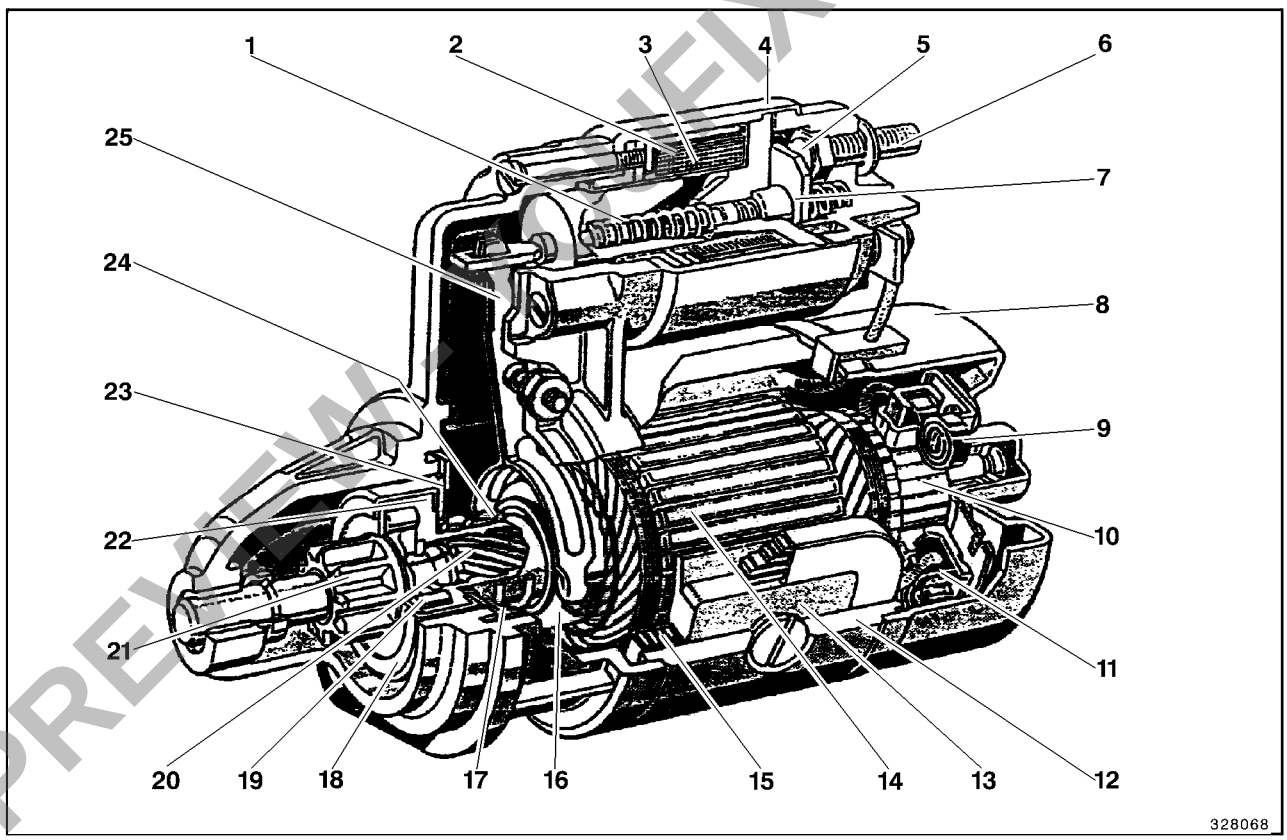

Fig. 12

PREVIEW - YOUFIXTHIS.COM

Download full manual at youfixthis.com

Explanation of legend (Fig. 1)

2732953

Part

The part column lists all components of the electrical system in alphabetical order. The letters represent the type of component installed in acc. with DIN 40 719.
(Extracts of DIN 40 719 cf. "ANNEX").

Quantity

Indicates how many of the components are installed in the machine.

Description and function

Refer to the kind of component and to its function (e.g. cooling-water temperature sensor).

Current path

The current-paths numbers are indicated at the upper margin of the wiring diagram sheets. These numbers permit to find electrical components in the wiring diagrams.

Example:

Load limit governor
In the "Current path" column, we have: **2-0/61.**
This means that the load limit governor can be found on wiring diagram sheet **2** in current path **0**.
Figure **61** is an internal CAD system coordinate which is of no importance for the interpretation of the documentation.

Location

The "Location" column indicates the place of installation of the component in the machine.

This information facilitates the location of components in the machine, e.g. when searching for faults.

Part number

Order numbers for spare parts
If no part number is indicated, the component is connected to the electrical system, but part of another assembly. The part number for this component can then be found in the corresponding spare-parts sheet.

Example:

Part numbers for solenoid valves can be found in the "Hydraulic system" section of the spare-parts list. □

PREVIEW - YOUFIXTHIS.COM

Download full manual at youfixthis.com

END POINT	CABLE NO.	(mm²	NO.	■ mm²	CABLE NO.	END POINT
X21.2.6	50	1,5	1	1,5	bkwhgn	S22.1/1
K91 (86)	51	1,5	2	1,5	bkwh	S22.1/2
K92 (86)	52	1,5	3	1,5	bkgn	S22.1/3
			4			
K90 (31)	53	1,5	5	1,5		S22.2
GROUND (-)		1,5	6	1,5		S22.2

CONNECTION TABLE PLUG/SOCKET
PANEL X34 DEVICE

END POINT	CABLE NO.	(mm²	NO.	■ mm²	CABLE NO.	END POINT
X33.1.1	9	1,5	1			
X33.2.15	30	1,5	2			

CONNECTION TABLE PLUG/SOCKET
PANEL X DEVICE

PREVIEW - YOUFIXTHIS.COM
Download full manual at youfixthis.com

Male nipples with metric or Imperial (inch) threads require a recess to accommodate the O-ring to seal the nipple (Fig. 6).

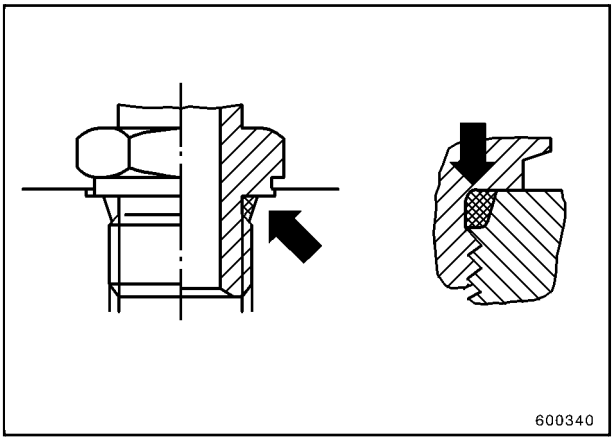

Fig. 6

In hydraulic systems, straight male nipples with sealing rings are often used. The ring is then rectangular in cross section (Stircomatic ring) or round (O-ring). Fig. 7 shows:

1 - Straight male nipple
2 - Stircomatic or O-ring
3 - Component to be sealed

If leakages occur, the nipple (1) should first be tightened up. If no improvement is reached, the seal ring must be changed.

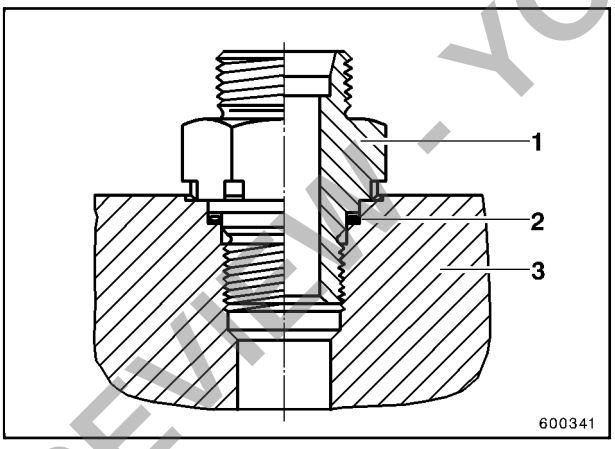

Fig. 7

Stircomatic seal rings

Stircomatic seal rings have been developed for control units, port plates, valves, threaded flanges and other connecting elements. They can be used with hydraulic oil, water and emulsions.

Fig. 1 shows the shape and construction of a Stircomatic seal ring:

1 - Cutting edge
2 - Textile inlay
3 - Rubber

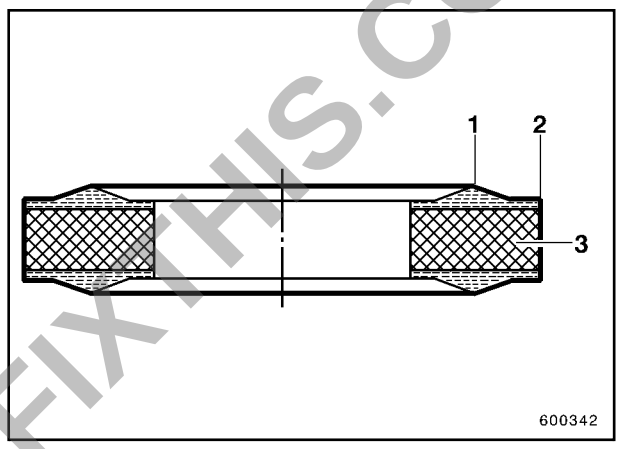

Fig. 1

Stircomatic seal rings have long-term pressure stability and high resistance to deformation.

O-rings previously used at such points can be replaced by Stircomatic rings.

PREVIEW - YOUFIXTHIS.COM

Download full manual at youfixthis.com

PREVIEW ONLY

You're viewing 25 of 541 pages

The full manual includes:

- All 541 pages, complete
- Searchable PDF (find any keyword)
- No watermarks
- Instant download
- Print-ready quality

GET FULL MANUAL NOW

New Holland Construction LW 80 Technical Manual

Scan or click anywhere
youfixthis.com

Click anywhere on this page to get the full manual