

CAUTION!

Most farm implement accidents can be avoided by the observance of a few simple safety precautions.

1. **Don't clean, lubricate, or make any adjustments on the bale wagon while it is in motion.**
2. **Don't engage the tractor clutch until you are certain that everyone is clear of the machine and have made sure that no tools are lying on the machine.**
3. **Don't work around the bale wagon in loose clothing that might catch in any of the moving parts.**
4. **Don't leave the tractor while the bale wagon is in operation.**
5. **Do not attempt to service the bale wagon while the hydraulic system is in operation or while the tractor is running.**
6. **Do not make any adjustments or *REACH UNDER ANY OF THE TABLES WHILE THEY ARE LOADED*.**

PREVIEW - YOUFIXTHIS.COM

Download full manual at youfixthis.com

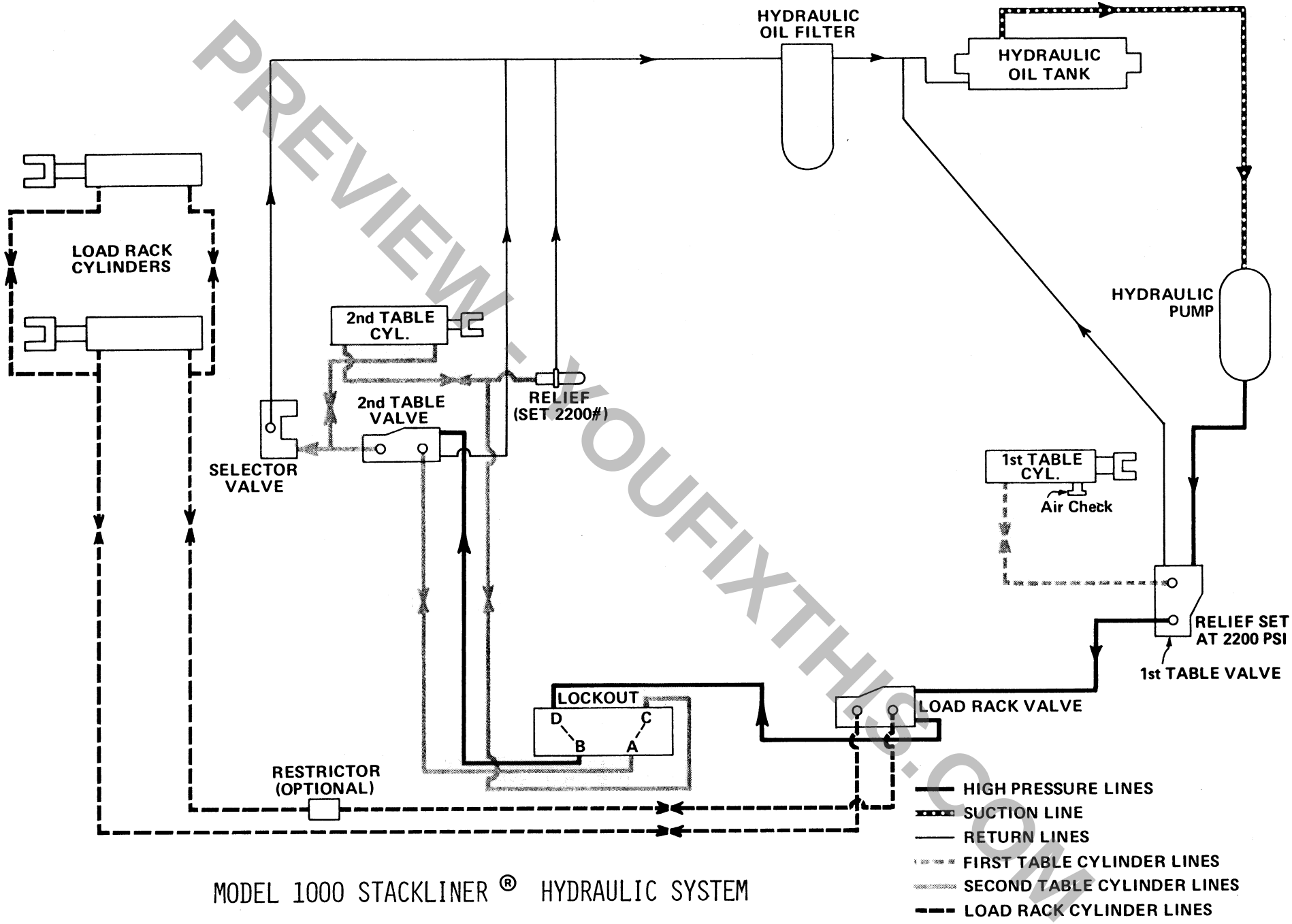

MODEL 1000 STACKLINER ® HYDRAULIC SYSTEM

PREVIEW - YOUFIXTHIS.COM

Download full manual at youfixthis.com

ASSEMBLY

NOTE: All replacement parts must be genuine Sperry New Holland parts available from your Sperry New Holland dealer. Before assembly, all parts should be cleaned in a clear, clean solvent and dried with clean air from an air hose. Never dry parts with a cloth or rag. Lint could cause binding of closely fitted parts.

1 Seal, Input Shaft Dirt and Water
2 Ring, Retaining
3 Washer, Seal Back-up
4 Seal, Input Shaft
5 Bearing, Input Shaft Needle

6 Cap Screw
6A Washer,
7 Cover, Hydraulic Control Valve
8 Seal, Hydraulic Control Valve Cover
9 Nut, Thrust Bearing Adjustment
10 Washer, External Tang, Adjusting Nut Lock

11 Washer, Internal Tang
12 Washer, Thrust Bearing Race (Small)
13 Bearing, Needle Thrust
14 Washer, Thrust Bearing Race (Large)
15 Valve, Hydraulic Control

16 Seal, Hydraulic, Cylinder Port
17 Cap Screw (12 Point)
18 Adapter, Hydraulic Control Valve
19 Seal, Hydraulic Control Valve Adapter
20 Washer, Seal Back-up

21 Seal, Hydraulic Control Valve Adapter
22 Ring, Spiral Lock
23 Shaft, Input Worm
24 Washer, Lower Worm Shaft Seal Back-up
25 Seal, Lower Worm Shaft

26 Cup, Lower Worm Shaft
27 Washer, Lower Worm Shaft Seal Cup Back-up (Bronze)
28 Washer, Lower Worm Shaft Retaining Ring
29 Ring, Lower Worm Shaft Retaining
30 Poppet
31 Poppet
32 Spring
33 Rod, Poppet
34 Ball, Steel (Light)
35 Ball, Steel (Dark) Spacer
36 Guide, Ball Return
37 Clip, Ball Return Guide
38 Lock Washer (Spl.)
39 Hex. Head Screw
40 Rack, Piston

40A Ring, Piston
41 Nut, Sector Shaft Adjusting Screw Jam
42 Plug, Relief (Plastic)
43 Hex. Head Cap Screw
43A Washer

44 Cover, Housing Side
44A Seal, Housing Side Cover
45 Bearing, Sector Shaft
46 Snap Ring
47 Washer, Seal Back-up (Steel)

48 Washer, Leather Back-up
49 Seal Assembly, Sector Shaft
50 Retainer, Sector Shaft Adjusting Screw
51 Screw, Sector Shaft Adjusting
52 Shaft, Sector

53 "O" Ring, Pressure Unloader Screw
54 Bolt
56 Housing, Steering Gear
57 Ring, Sector Shaft Bearing Retaining

58 Bearing, Sector Shaft
59 Seal, Sector Shaft Seal Adapter
60 Adapter, Sector Shaft Seal
61 Cap Screw (12 Point)
62 Seal, Sector Shaft Dirt and Water

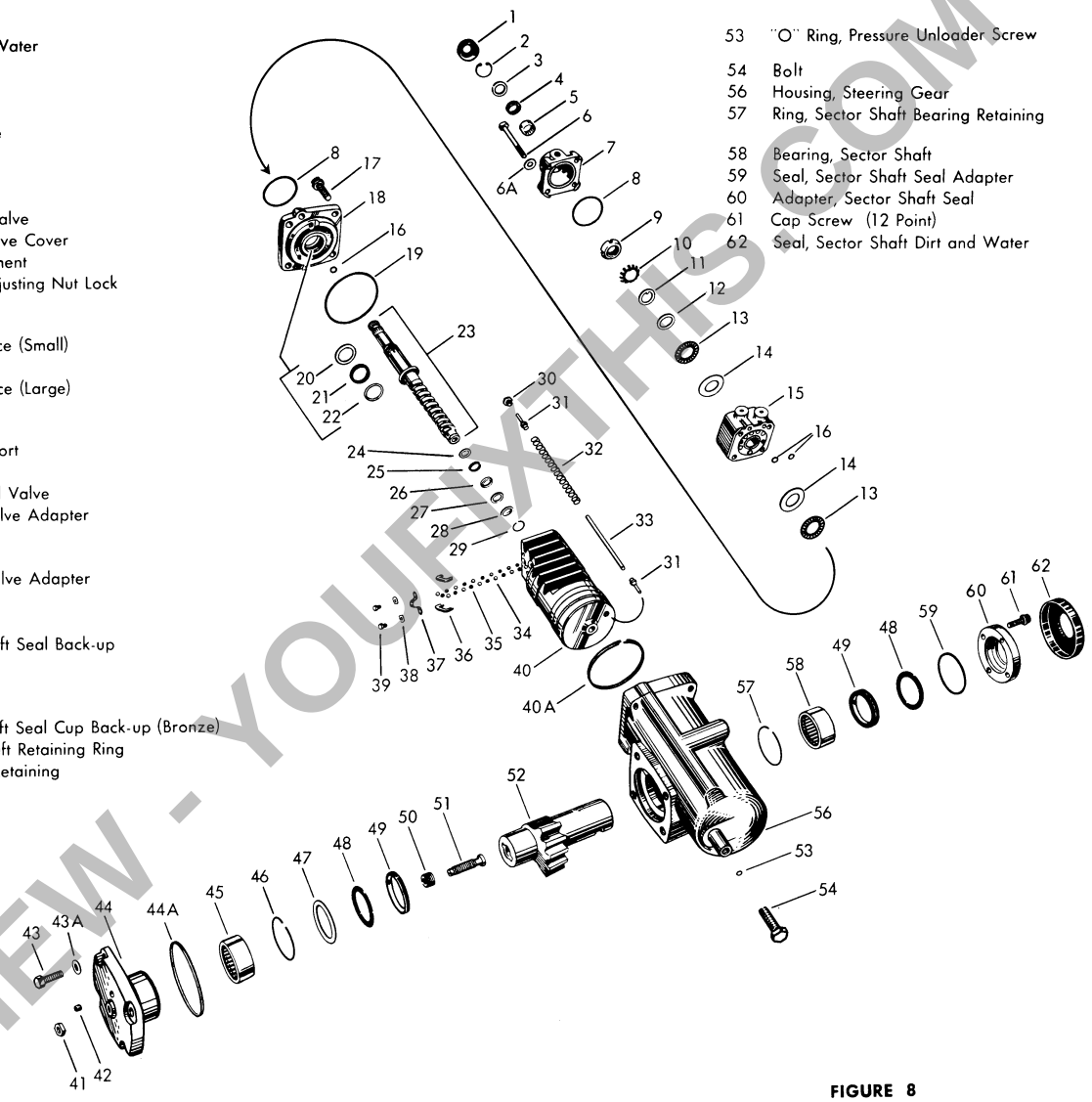

FIGURE 8

HOUSING ASSEMBLY

1. Place housing on wooden block to protect the side cover face and insert sector shaft bearing retaining ring. Press bearing into housing carefully until against retaining ring. Position bearing with numbered edge to the outside. Check bearing carefully after assembly to make sure bearing is not damaged. Refer to Figure 8 for assembly order of steering gear components.

PREVIEW - YOUFIXTHIS.COM

Download full manual at youfixthis.com

TROUBLE SHOOTING

Hydraulic mechanisms are precision units and their continued smooth operation depends on proper care, therefore, do not neglect hydraulic systems. Keep them clean. Change the oil and oil filter at established intervals. If in spite of these precautions improper operation does occur, the cause can generally be traced to one of the following:

1. Improper adjustments.
2. Dirt, decomposed packing, water, sludge, rust, etc. in the system.
3. Insufficient fluid in the system.
4. Internal or external leakage.
5. Presence of air in the system.
6. Mechanical damage or structural failure.
7. Use of the wrong viscosity or type of oil.

Some possible causes of specific troubles which may be encountered and their remedy are indicated in the following tables:

TROUBLE SHOOTING HYDRAULIC PUMPS

PROBLEM — Noisy pump.

a. Answer — Oil level too low in reservoir. Maintain oil level high enough over the suction line to pump so that oil will not vortex and draw air into suction line. If pump is drawing air, oil will turn milk colored.

b. Answer — Oil too heavy. Heavy oil will not flow through suction line and into pump suction port fast enough to prevent the pump from cavitating. Use type of oil recommended in Owner's Manual.

c. Answer — Suction line plugged or collapsed. Inspect line for internal obstructions and correct size. Pump should not pull more than 5 inches of mercury vacuum for maximum pump life.

d. Answer — Suction line screen plugged. Clean screen and change hydraulic oil.

e. Answer — Air leaks at pump intake piping joints, at pump shaft packing can be tested by pouring oil on joints while listening for change in sound of operation and tighten as necessary.

f. Answer — Reservoir air vent plugged. Air must be allowed to breathe in the reservoir. Clean or replace breather.

g. Answer — Remove rag, paper, etc. that might have been pulled into the suction line or pump.

h. Answer — Realign coupling that might be misaligned.

i. Answer — Properly torque tie bolts in pump to prevent air leaking into the pump body.

j. Answer — Replace worn or broken parts inside pump.

PROBLEM — Oil Heating.

a. Answer — Oil supply too low. Maintain oil level at full mark. The oil reservoir is designed to hold enough oil to maintain a safe operating temperature. If the oil level is low, the oil temperature will increase.

b. Answer — Relief valve setting too high or too low. Set relief valve at correct pressure. A high relief valve setting will allow too much slippage past the gears and pump. A low relief valve setting will allow too much oil to pass over the relief valve thus creating heat. Allowing the pump to run over relief valve for excessive length of time will burn up the pump. Can be caused by a sticking valve spool.

c. Answer — Oil in system too light. Drain reservoir and refill with proper viscosity. Light oil will allow too much internal slippage in pump, valve and cylinders thus creating heat.

d. Answer — Contaminated oil. Drain reservoir, change filter and refill with proper viscosity of clean oil. Foreign particles in oil increase friction and increase heat.

PREVIEW - YOUFIXTHIS.COM
Download full manual at youfixthis.com

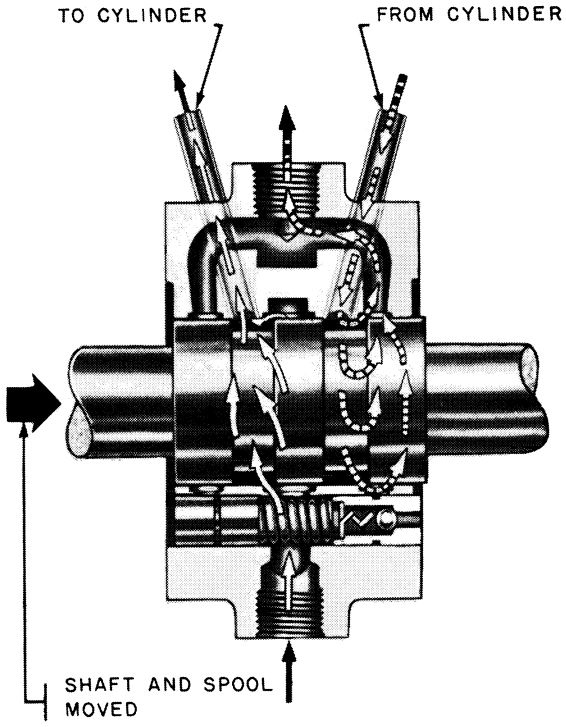

FIG.C

VALVE POSITION AND FLUID FLOW FOR LEFT TURNING

NOTE: To assist in the elimination of pump heat and belt squeal problems, the power cylinder has an unloading (or poppet) valve incorporated in the rack piston, so that at each end of the piston stroke the pressure may be reduced. An adjusting screw is provided to enable the pressure relieving point to be varied slightly in one direction.

Whenever the effort at the steering wheel is released, the valve spool is returned to the center position.

If the steered wheels are subjected to shock loads, the pitman arm, acting through the inner parts of the gear, shifts the input shaft worm and control valve spool axially in the appropriate direction, thus directing the fluid to the proper side of the piston to resist the shock forces. This "blocking action" prevents kickbacks at the steering wheel.

PREVIEW - YOUFIXTHIS.COM

DISASSEMBLY

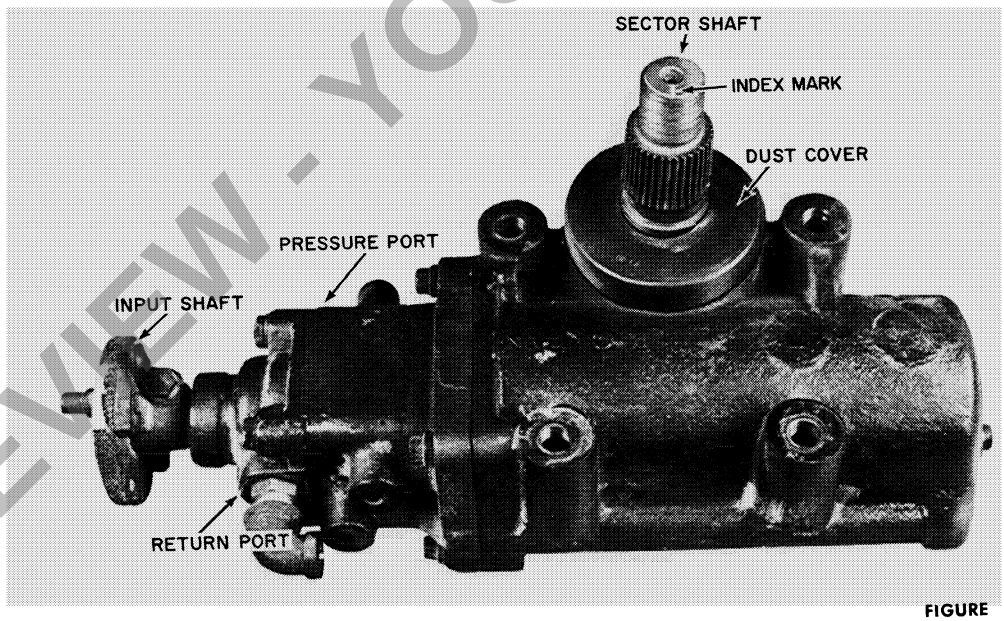

FIGURE 1

Drain the oil from the gear assembly. Clean off dirt from around all fittings before disconnecting hoses. Plug the port holes immediately after hoses are disconnected and remove the gear from bale wagon. Gear assembly may be cleaned and should be dry before disassembly on a clean work bench.

All internal parts from gear assembly should be cleaned in a clear, clean solvent and dried with clean air from an air hose. Never dry parts with a cloth. Lint could cause binding of closely fitted parts. **Caution:** Do not steam clean any hydraulic parts. Never force or abuse closely fitted parts, as damage may result.

DISASSEMBLY OF STEERING GEAR

1. Rotate the input shaft until the index mark is perpendicular to the gear assembly, straight ahead position as shown in Figure 1.

Download full manual at youfixthis.com

COMPONENTS OF A HYDRAULIC SYSTEM

Basically, hydraulic systems are composed of the following units, each of which will be discussed in this manual.

a. Pump

b. Cylinder or motor

c. Valves
   1. Direct the flow
   2. Regulate the flow
   3. Regulate the pressure

d. Accessories
   1. Reservoir
   2. Oil
   3. Filters
   4. Hoses and tubes
   5. Breathers
   6. Restrictors

PUMPS

It is common to think of a hydraulic pump as a sort of compressor but this is not so. At low pressures oil is virtually incompressible and, even though it may be or can be measurably compressed at high pressures, you should not think of the pump as a compressor. The purpose of the pump is not to compress but to move oil under pressure.

We use gear type pumps on the automatic bale wagon. This is the simplest type of pump. The gears are encased in a housing in which there is an inlet and outlet port. Oil flows or is drawn into the housing through the inlet port, filling the space between the gear teeth with oil. As the gears revolve the gear teeth mesh together forcing the oil out through the outlet port which is in line with the point where the gear teeth come together.

Close fit of the gear teeth within the housing is required to provide a seal between the inlet and outlet sides minimizing internal leakage.

CYLINDERS

The simplest type of cylinder is a single acting or one way cylinder which applies force in only one direction. Fluid directed into the housing displaces the rod forcing it out. Since there is no provision for retracting the rod hydraulically, the retracting force is usually gravity.

A double acting cylinder permits application of hydraulic pressure on either side of the piston to control lineal motion in either of two opposite directions. Because of their simplified construction little can go wrong with the cylinder in itself. The most common problems are external or internal leaks.

VALVES

Basically, valves in a hydraulic circuit do what switches, transformers, and condensers do in an electrical circuit, that is, they control.

1. The direction of oil flow.
2. The volume of oil going to various parts of the system.
3. The pressure of oil at different parts and different points.

Most valves are variations of the above mentioned controls.

Valves more than any other part of the system are precision made. First and foremost they must be accurate and control both the pressure and volume. Here again is a very important reason for a careful selection of hydraulic oils and careful maintenance practices to keep it absolutely clean. The presence of foreign particles could be enough to lodge between these close working parts and cause scoring or even sticking.

1. **Direction of flow.** Control valves are directional devices directing the flow of oil to the proper place at the proper time. Spool type valves, the type we are concerned with, are the most commonly used. This design permits a variety of portal arrangements as well as enabling us to regulate the speed of operation. This is done by throttling with the spools between the lands and grooves of the spool and housing.

   In the valves we use, the spools are positioned by hand or by the use of mechan-

PREVIEW - YOUFIXTHIS.COM

Download full manual at youfixthis.com

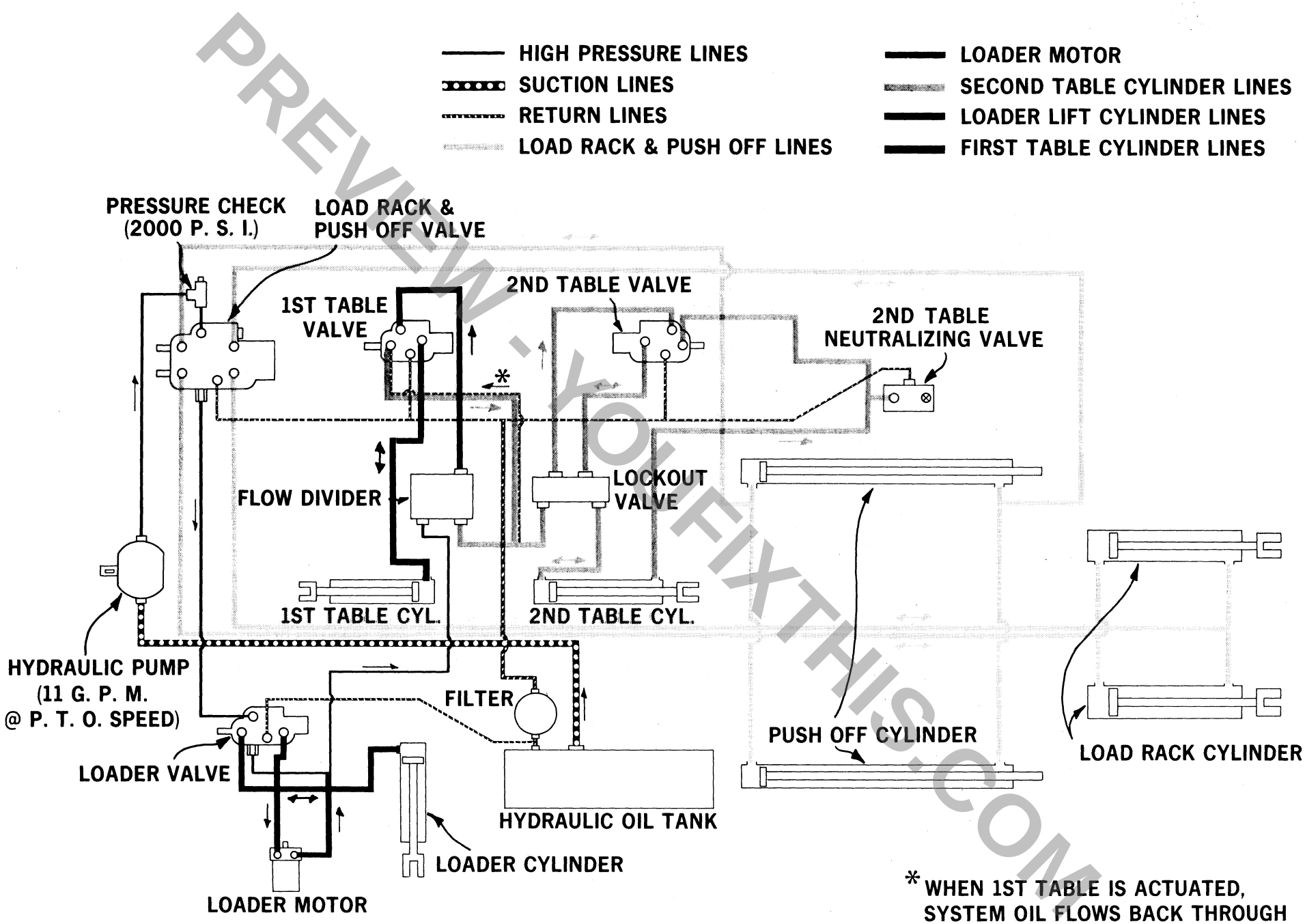

MODEL 1044 WAGON

* WHEN 1ST TABLE IS ACTUATED, SYSTEM OIL FLOWS BACK THROUGH 1ST TABLE VALVE, ACTING AS 2ND TABLE DELAY.

PREVIEW - YOUFIXTHIS.COM
Download full manual at youfixthis.com

PROBLEM — Load rack will not raise or raises slowly.

a. Answer — Oil pressure too low.

b. Answer — Load rack is overloaded.

c. Answer — Load rack cylinder seals are leaking.

1044 STACKLINER

PROBLEM — Lift chain orbit motor will not run or runs slow.

a. Answer — The loader control valve spool should be pulled out of the valve body to direct oil to the loader motor. If the valve spool is not pulled all the way out of the body, the loader motor will run slow or will not run.

b. Answer — Oil pressure too low.

PROBLEM — First table will not raise or raises slowly.

a. Answer — The first table valve spool is not pulled out of the valve body and directing oil flow to the first table cylinder.

b. Answer — Flow divider spool is binding and flow divider does not direct 4 GPM to the first table valve.

PROBLEM — First table drops slowly or does not drop.

a. Answer — First table valve spool is not pushed into the valve body to open up the return port to the first table cylinder.

b. Answer — Breather port and first table cylinder is plugged up.

c. Answer — First table cylinder or first table pivot points are binding.

PROBLEM — Second table will not raise or raises slowly.

a. Answer — Second table valve spool is not pulled out of the valve body and oil flow is not being directed to the second table cylinder.

b. Answer — Second table lock out valve, plunger or poppet is binding and is not directing oil flow to the second table valve or to the second table cylinder.

c. Answer — Second table cylinder seals are leaking.

PROBLEM — Second table drops slowly or will not drop.

a. Answer — Second table valve spool is not pushed into the valve body and oil is not being directed to the second table cylinder.

b. Answer — Spool in second table neutralizing valve is not forward and oil flow is not being directed to the second table cylinder.

c. Answer — Poppet in second table lock out valve is broken.

d. Answer — Spool stop washer on second table valve is damaged and the valve spool is traveling too far and closing the port.

PROBLEM — Second table will not stay in up position.

a. Answer — Second table valve is not in the center position.

b. Answer — Poppet is broken in second table lock out valve.

c. Answer — Second table cylinder seals are leaking.

PROBLEM — Hydraulic relief valve bypasses when second table is in the down position.

a. Answer — Second table neutralizing valve spool is not in the rear position and oil flow is being directed to the second table cylinder instead of the return line.

PROBLEM — Load rack will not raise.

a. Answer — Hydraulic pressure too low.

b. Answer — Load rack is overloaded.

c. Answer — Load rack cylinder seals are leaking.

PREVIEW - YOUFIXTHIS.COM

Download full manual at youfixthis.com

GENERAL SYSTEM OIL FLOW

The hydraulic system on the Model 1049 Stackcruiser is an open center system. The pump will deliver a total of 23 g.p.m. at 2750 R.P.M. The pump has a built in priority flow divider that supplies 2.5 g.p.m. at 1500 psi for the power steering system. The secondary oil is used to operate the bale wagon hydraulic system at 2000 psi. The system oil is divided twice and then is rejoined before it returns to the reservoir. The first flow divider has a 4 g.p.m. priority which is used to operate the cross conveyor, the first table and the bale loader lift cylinder. The secondary oil from the first flow divider is divided by a 8 g.p.m. priority flow divider. The 8 g.p.m. from the second flow divider is joined with the 4 g.p.m. from the first flow divider after it has gone through the bale loader lift and first table valves, to operate the bale loader motor. This oil is then joined with the secondary oil from the second flow divider to operate the second table, load rack, automatic-tie and push-off feet.

SPECIFIC FLOW

SYSTEM SHUT-OFF AND SECOND TABLE LOCK

A double selector valve is used to engage the hydraulic system and to hydraulicly lock the second table. The front set of ports on the valve either direct the oil to the system or return it to the reservoir. The rear set of ports are connected in the second table line between the second table cylinder and the second table valve. When the spool is shifted toward the rear (retracted) the hydraulic system is turned on and the second table cylinder is connected to the second table valve. When the spool is shifted forward (extended) the hydraulic system is shut off and the second table cylinder line is blocked, thus locking the second table.

BALE LOADER LIFT

The bale loader lift valve is a spring centered power beyond valve. It receives 4 g.p.m. from the first flow divider in the system. When in the center position the oil flows out the power beyond port to the first table valve. Moving the spool to the rear (pulling spool out of valve body) will direct the flow to the bale loader lift cylinder and raise the loader. There is an orifice plate in this port that restricts the speed that the loader raises and falls. Moving the spool forward (pushing spool into valve body) will allow the oil to flow from the loader lift cylinder to the reservoir, lowering the bale loader. This also directs the 4 g.p.m. system oil to the return lines. **NOTE:** Orifice plate should be installed with small hole out.

BALE LOADER MOTOR

The 4 g.p.m. from the cross conveyor and the 8 g.p.m. from the second flow divider join at the bale loader motor valve inlet. This gives 12 g.p.m. that can be used to run the bale loader motor. The spool in the loader motor valve is normally in a pulled out position. This causes the oil to flow out the "A" port. At the "A" port the oil joins with the secondary oil from the second flow divider to continue on to the second table valve. When the valve spool is pushed into the valve body the oil is directed to the out port which causes the oil to flow through the bale loader motor. The oil returning from the bale loader motor also joins at the "A" port of the loader motor valve.

FIRST TABLE

The first table valve controls the first table and the cross conveyor. Because of the "over center" linkage the valve is never used in the center position. When the valve spool is pushed into the valve body the oil which is coming from the bale loader lift valve is directed to the cross conveyor and then joins the rest of the oil down stream. The first table cylinder is connected to the return line during this time. When the valve spool is pulled out of the valve body the oil flows to the first table cylinder. This shuts off the cross conveyor and causes the first table to raise. As the first table raises the air check valve in the rod end of the first table cylinder causes air pressure to be built up. When the over center linkage shifts the valve spool back into the valve body the air pressure will help the first table fall. The out port of the first table is connected direct to the reservoir bypassing the filter so that the back pressure will be small and will also help to let the first table fall faster.

While the first table is raising the cross conveyor line is connected to the return line. Since the cross conveyor line joins the system downstream, oil can flow back through the cross conveyor line to the first table return line, thus providing a method of delaying the second table and all the other systems downstream from it while the first table is cycling. At the cross conveyor motor there are two check valves that prevent it from running backward while the second table delay is functioning.

FIRST TABLE DELAY

In the line running from the first table valve to the first table cylinder is a valve that serves as a first table delay. Linkage is hooked to the valve spool that pulls it out of the valve body when both the second table and the bale loader

PREVIEW - YOUFIXTHIS.COM

Download full manual at youfixthis.com

PROBLEM — Second table will not remain in raised position.

Answers — a. Second table valve spool is not centered.
b. Lockout valve poppet is damaged. (Only when machine is stopped.)
c. Second table cylinder seals are leaking.

PROBLEM — Push-off feet will not move.

Answers — a. Push off valve spool is not in correct position.
b. Push off feet are overloaded, or bent and binding.
c. See b, c, f, h under "second table will not raise."
d. Push off cylinder seals are leaking.
e. Push off cylinder shaft bent.

PROBLEM — Load rack will not operate or operates slowly.

Answers — a. Retract the push off feet so that the interlock linkage will release the load rack control linkage. Check the adjustment of the interlock linkage.
b. The load rack is overloaded.
c. See a, c under "push off feet will not move."
d. Load rack cylinder seals are leaking.
e. Load rack valve spool is not in correct position.
f. Second table valve spool must be in the "center" or "in" position.
g. If load rack will not raise when the second table valve spool is in the "center" position, the second table valve is not correct and should be replaced.
h. Retriever restrictor orifice not installed properly (not floating or backwards).

PROBLEM — Auto-tie tines will not move.

Answers — a. Auto-tie control valve spool is not in correct position.
b. See c, e under "load rack will not raise."
c. Tines binding in guides.
d. Auto-tie cylinder seals leaking.

PROBLEM — Rolling rack will not go forward, or will not go all of the way forward.

Answers — a. Hydraulic pressure too low. Check and adjust main system pressure.
b. Control valve not shifting.
c. Load is too heavy or bales binding on sideboards.
d. Restrictor orifice in port "c" of rolling rack lockout valve is plugged.

PROBLEM — Second table does not raise prior to delivery of bales from load rack.

Answers — a. Restrictor orifice plate may be missing from port "c" of rolling rack lockout valve.

PROBLEM — Single bale unloading cross conveyor chain does not operate or operates too slowly.

Answers — a. Control valve not shifting.
b. Oil pressure too low — check and adjust main system pressure to specifications.
c. P.T.O. speed too slow.
d. Orbit motor worn.
e. Foreign material wound around sprockets and chain.
f. Chain too loose.

PROBLEM — Single bale unloading cross conveyor chain does not run the proper direction.

Answers — a. Hoses installed incorrectly — reverse hoses to motor.

PROBLEM — Second table does not remain in the single bale unloading position.

Answers — a. Second table control valve not centered.
b. Excessive leakage through either of two lockout valves due to missing #523201 "O" ring in lockout valve body.
c. Excessive leakage through second table control valve.
d. Metering cylinder leaking — replace metering cylinder.

PREVIEW - YOUFIXTHIS.COM

Download full manual at youfixthis.com

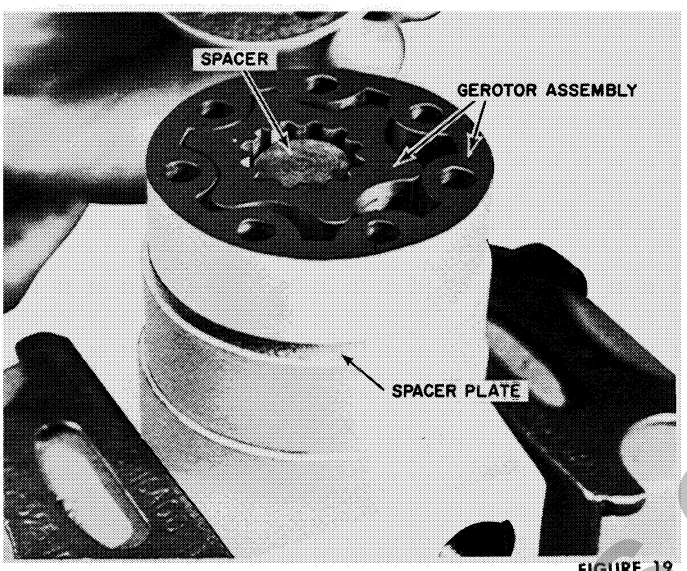

FIGURE 19

plate and with both sides of the gerotor. Do not rub on abrasive unless absolutely necessary.

9. Observe all mating surfaces for scratches or burrs which could cause leakage.

ASSEMBLY

1. Slide the spool into the motor housing far enough to accommodate the thrust bearing.
2. With the ports facing up, turn the spool so that the shaft keyway is straight up at 12 o'clock.
3. Replace the thrust bearing, the drive and the spacer plate making sure that the holes are in alignment. Place the gerotor on the splined drive shaft. There is a slight chamfer on one side of some gerotors. If this chamfer is present it should be installed towards the housing. (Figure 19)

   NOTE: Some motors use a spacer on each end of the drive shaft.
4. The top view (Figure 20) shows the orientation of the gerotor elements with relation to the shaft key as they are assembled at the factory. With this orientation the shaft will rotate as shown in the lower view with the ports pressurized as indicated.
5. Replace the spacer inside the gerotor star, then the end cap on the housing.
6. If the holes do not line up properly, grasp the gerotor and twist until you get alignment. Be careful not to disengage the gerotor from the splines on the drive as this will change the rotation.
7. Now replace the capscrews in the motor. Tighten them down finger tight. Gradually draw them up, working on alternate pairs of screws so that it will draw up evenly.

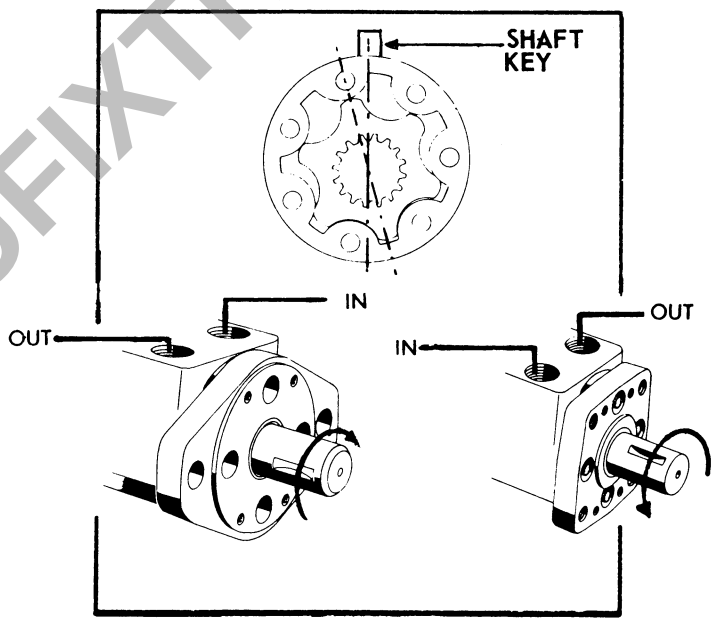

FIGURE 20

8. Final tightening should be to 175-200 inch lbs. of torque.
9. Reverse the motor, installing thrust bearing and bearing race.
10. Proceed as outlined in seal replacement section to complete assembly.

PREVIEW - YOUFIXTHIS.COM

Download full manual at youfixthis.com

SERIES "B" CESSNA GEAR PUMPS WITH INTEGRAL FLOW DIVIDER USED ON MODEL #1030–1035–1045–1046–1047

DISASSEMBLY

1. Remove key from shaft.
2. Clean outside of pump thoroughly.
3. Clamp pump in vise, shaft up.
4. Remove cap screws (#26) 8 each.
5. Remove copper crush washers (#25) spring cap screws.
6. Use sharp tool to mark across front plate, body and back plate. This will assure proper reassembly.
7. Remove pump from vise — Hold pump in hands and bump shaft against wooden block to separate front plate (#23) from back plate (#3). Body (#15) will remain with either front plate or back plate.
8. To separate body from section it remains with, place drive gear (#16) in bearing and tap protruding end with plastic hammer.
9. Remove diaphragm (#17) from front plate by prying with sharp tool.
10. Lift springs (#21) 2 each and steel balls (#22) 2 each, from front plate.
11. Lift phenolic gasket (#18) and protector gasket (#19) from front plate.
12. Lift moulded "V" seal (#20) from front plate.
13. Remove shaft seal (#24) from front plate.
14. Remove hex plug (#8) from back plate assembly (#3) and remove O-ring (#7) from plug. Remove shims (#6), spring (#5), and poppet assembly (#4).
15. Remove hex plug (#14) from back plate assembly (#3) and remove O-ring (#13) from plug. Remove shims (#12), spring (#11), disc (#10) and spool (#9).
16. Remove hex plug (#2) from back plate assembly (#3) and remove O-ring (#1) from plug.

NOTE: Keep parts separate and make certain same shims are replaced in their respective places.

INSPECT PARTS FOR WEAR

GENERAL

1. Clean and dry all parts.
2. Remove nicks and burrs from all parts with emery cloth.

GEAR ASSEMBLY

1. Inspect drive gear shaft (#16) for broken keyway.
2. Inspect both the drive gear and idler gear shafts at bearing points and seal areas for rough surfaces and excessive wear.
3. If shafts measure less than .6850 in bearing area the gear assembly should be replaced. (One gear assembly may be replaced separately; shafts and gears are available as assemblies only).
4. Inspect gear face for scoring and excessive wear.
5. If gear width is below the following figures — gear assembly should be replaced.

20260 - .309	20270 - .767
20262 - .371	20272 - .924
20264 - .441	20274 - 1.107
20266 - .535	20276 - 1.330
20268 - .636	

6. Snap rings on shaft should be in groove.
7. If edge of gear teeth are sharp — break edge with emery cloth.

FRONT AND BACK PLATES

1. Oil grooves in bearings in both front plate and back plate should be in line with dowel pin holes and 180 degrees apart. This positions the oil grooves closest to the respective dowel pin holes.
2. If I.D. of bearings in front plate or back plate exceed .691 — front or back plate should be replaced. (Bearings are not available as separate items).
3. Bearings in front plate should be flush with islands in groove pattern.
4. Check for scoring on face of back plate — if wear exceeds .0015 end plate should be replaced.

BODY

1. Check inside gear pockets for excessive scoring on wear.
2. Body should be replaced if I.D. of gear pocket exceeds 1.719.

PREVIEW - YOUFIXTHIS.COM

Download full manual at youfixthis.com

PREVIEW ONLY

You're viewing 12 of 112 pages

The full manual includes:

- All 112 pages, complete
- Searchable PDF (find any keyword)
- No watermarks
- Instant download
- Print-ready quality

GET FULL MANUAL NOW

Sperry New Holland 1000, 1033, 1047, 1005, 1034, 1048, 1010, 1035, 1049, 1012, 1044, 1030, 1045, 1032, 1046 Service Manual



Scan or click anywhere
youfixthis.com

Click anywhere on this page to get the full manual