Engine and crankcase - Remove

⚠ DANGER

Heavy objects!
Lift and handle all heavy components using lifting equipment with adequate capacity. Always support units or parts with suitable slings or hooks. Make sure the work area is clear of all bystanders.
Failure to comply will result in death or serious injury.

D0076A

ATTENTION: *Use suitable tools to align the holes. Never use fingers or hands.*

1. Remove the cab as described in operation **Cab - Remove (90.100)**.
2. Extract the fixing pin and remove the ballast **(1)**, unscrew the retaining screws and retrieve the ballast support **(2)**.

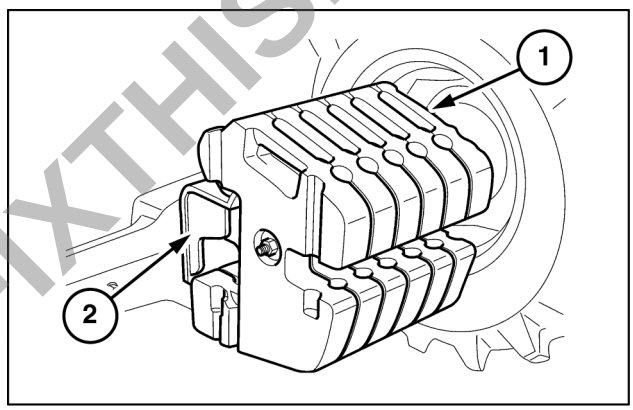

MOLI11F0001AB 1

3. Position and secure the bracket **380001613 (1)** complete with spacers **50162 (4)** on the front axle **(3)** and the related support **(2)**.

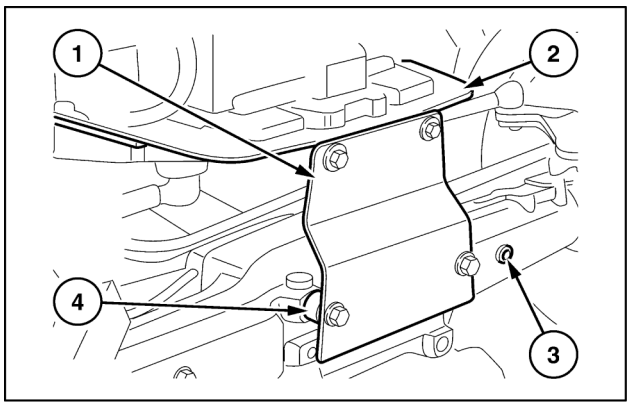

MOLI11F0002AB 2

4. Unscrew the plug and drain the oil from the rear transmission casing (the prescribed quantity is **42 l**).

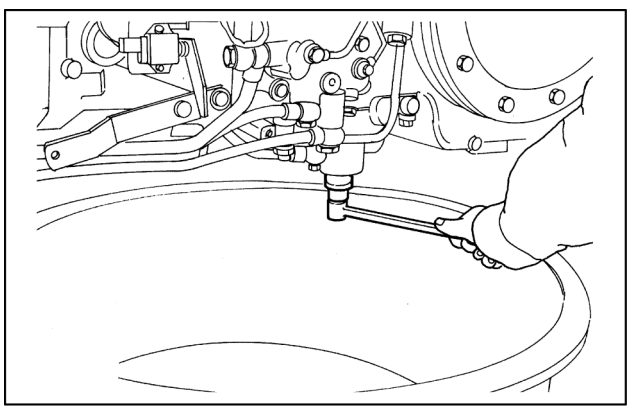

MOLI11F0003AA 3

PREVIEW - YOUFIXTHIS.COM
Download full manual at youfixthis.com

Clutch hydraulic release control - Alignment

Coplanarity adjustment of 11”/11” dual clutch release

1. After overhauling the clutch, fit centering pin **380001612 (1)** and fit the clutch assembly on the flywheel tightening the fixing screws **(2)**.

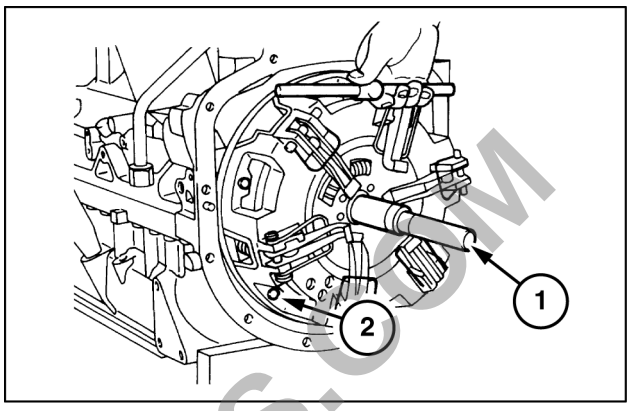

MOLI11F0064AB 1

2. Insert the gauge **380000293 (1)** on the centering pin and, using a feeler gauge, adjust the main clutch release levers **(2)** to obtain a clearance of **0.1 mm**.

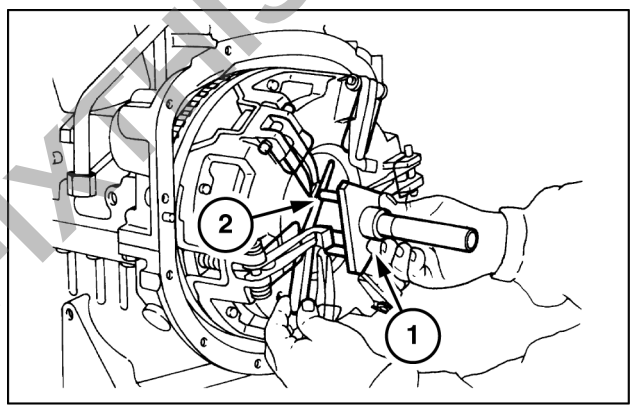

MOLI11F0065AB 2

3. Turn the gauge **380000293 (1)** and, using a feeler gauge, adjust the P.T.O. clutch release levers **(2)** to obtain a clearance of **0.1 mm**.

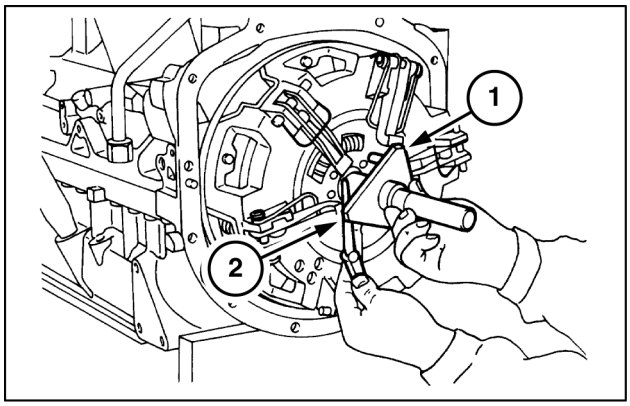

MOLI11F0066AB 3

PREVIEW - YOUFIXTHIS.COM

Download full manual at youfixthis.com

Contents

Transmission - 21

[21.114] Mechanical transmission 21.1

[21.118] Transmission/Rear drive 21.2

[21.140] Mechanical transmission internal components 21.3

[21.112] Power shuttle transmission 21.4

[21.134] Power shuttle transmission external controls 21.5

[21.154] Power shuttle transmission internal components 21.6

[21.160] Creeper 21.7

[21.162] Reverser 21.8

[21.168] Hi-Lo unit 21.9

PREVIEW - YOUFIXTHIS.COM

Download full manual at youfixthis.com

Electro-hydraulic control - General specification

T4.105LP With cab [ZFJD00717 -]	MEA --- WE
T4.105LP Without cab [ZEJD00007 -]	MEA --- WE
T4.75LP With cab [ZFJD01559 -]	MEA --- WE
T4.75LP Without cab [ZFJD01319 -]	MEA --- WE
T4.85LP With cab [ZFJD01714 -]	MEA --- WE
T4.85LP Without cab [ZFJD00163 -]	MEA --- WE
T4.95LP With cab [ZFJD01191 -]	MEA --- WE
T4.95LP Without cab [ZFJD00162 -]	MEA --- WE

Main specifications–4WD electrohydraulic engagement

Reduction ratio of drive gear device (on all models)	43/28X28/39 = 1 :1.1
Internal diameter of sliding sleeve **(16)** (**Gearbox - Sectional view (23.304)**)	**35.080 - 35.119 mm** (**1.381 - 1.383 in**)
Diameter of coupled shaft **(1)**	**34.975 - 35.000 mm** (**1.377 - 1.378 in**)
Internal diameter of sliding sleeve **(16)**	**50.080 - 50.119 mm** (**1.972 - 1.973 in**)
Diameter of coupled shaft **(1)**	**48.975 - 49.900 mm** (**1.928 - 1.965 in**)
Internal diameter of fixed sleeve **(15)**	**22.065 - 22.098 mm** (**0.869 - 0.870 in**)
Diameter of coupled shaft **(1)**	**21.979 - 22.000 mm** (**0.865 - 0.866 in**)
Length of spring (**(20)**, with spring free)	**82 mm** (**3.228 in**)
Length of spring **(20)** under a load of **60.5 - 65.5 kg** (**133.38 - 144.40 lb**)	**40 mm** (**1.575 in**)

Propeller shaft data

Thickness of rings **(2)** (**Internal line - Detailed view (23.202)**) that adjust the position of the front sleeve **(3)** on the 4WD transmission shaft	**1.5 mm** (**0.059 in**) **1.9 mm** (**0.075 in**) **2.2 mm** (**0.087 in**) **2.5 mm** (**0.098 in**) **2.8 mm** (**0.110 in**) **3 mm** (**0.118 in**) **3.3 mm** (**0.130 in**) **3.7 mm** (**0.146 in**) **4 mm** (**0.157 in**) **4.3 mm** (**0.169 in**)
Front sleeve end float (L)	**1.0 - 1.5 mm** (**0.039 - 0.059 in**)

Electro-hydraulic control - Torque

T4.105LP With cab [ZFJD00717 -]	MEA --- WE
T4.105LP Without cab [ZEJD00007 -]	MEA --- WE
T4.75LP With cab [ZFJD01559 -]	MEA --- WE
T4.75LP Without cab [ZFJD01319 -]	MEA --- WE
T4.85LP With cab [ZFJD01714 -]	MEA --- WE
T4.85LP Without cab [ZFJD00163 -]	MEA --- WE
T4.95LP With cab [ZFJD01191 -]	MEA --- WE
T4.95LP Without cab [ZFJD00162 -]	MEA --- WE

PREVIEW - YOUFIXTHIS.COM

Download full manual at youfixthis.com

Contents

Front axle system - 25

[25.100] Powered front axle 25.1

[25.102] Front bevel gear set and differential 25.2

[25.108] Final drive hub, steering knuckles, and shafts 25.3

[25.310] Final drives 25.4

PREVIEW - YOUFIXTHIS.COM

Download full manual at youfixthis.com

Contents

Rear axle system - 27

[27.100] Powered rear axle 27.1

[27.106] Rear bevel gear set and differential 27.2

[27.120] Planetary and final drives 27.3

[27.126] Spur gear and final drives 27.4

PREVIEW - YOUFIXTHIS.COM

Download full manual at youfixthis.com

Contents

Power Take-Off (PTO) - 31

[31.101] Rear mechanical control 31.1

[31.146] Front Power Take-Off (PTO) 31.2

PREVIEW - YOUFIXTHIS.COM

Download full manual at youfixthis.com

Hydraulic service brakes - General specification

Type: Service brake Operation: Service brake	With oil bath disk, acting on differential drive shafts Hydrostatic, with independent pedals (connected by means of a pin)
Service brake disk material	Sintered
Disk thickness: Service brake Wear limit	**10 mm** (**0.3937 in**) **8.6 mm** (**0.3386 in**)
Hydrostatic control Hydraulic pump Working pressure	With 2 master cylinders independently operated by brake pedals **17.6 bar** (**255 psi**)
Control pedal adjustment Bleeding air from brake circuits	See **Brake pedals - Adjust (33.202)** See **Brake lines - Bleed (33.202)**

Hydraulic service brakes - Torque

Tightening torques

Parts to be tightened	Thread	Tightening torque
Nut securing final drive to transmission casing **(C_1)**	–	**135 - 149 N·m** (**100 - 110 lb ft**)
Guide bolts for parking brake mobile sector **(C_2)** (*)	–	**24 N·m** (**17.7 lb ft**)

(*) Apply 2 drops of **LOCTITE® 243™** thread lock.

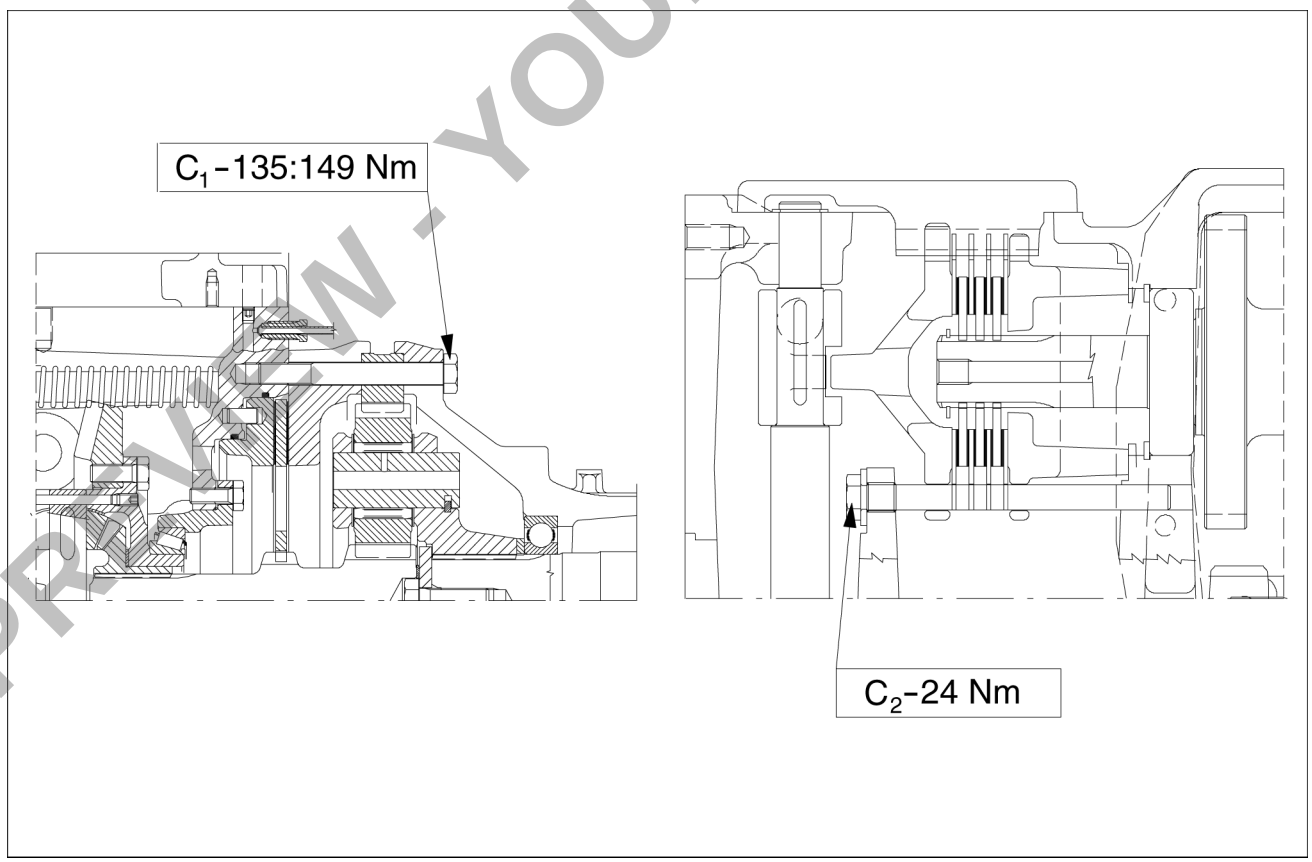

MOLI12SPF0222FA 1

PREVIEW - YOUFIXTHIS.COM
Download full manual at youfixthis.com

Mid-mount remote control valve - Hydraulic schema

T4.105F With cab [ZDJD11527 -]	MEA --- WE
T4.105LP With cab [ZFJD00717 -]	MEA --- WE
T4.75F With cab [ZDJD10166 -]	MEA --- WE
T4.75LP With cab [ZFJD01559 -]	MEA --- WE
T4.85F With cab [ZDJD11099 -]	MEA --- WE
T4.85LP With cab [ZFJD01714 -]	MEA --- WE
T4.95F With cab [ZDJD10640 -]	MEA --- WE
T4.95LP With cab [ZFJD01191 -]	MEA --- WE

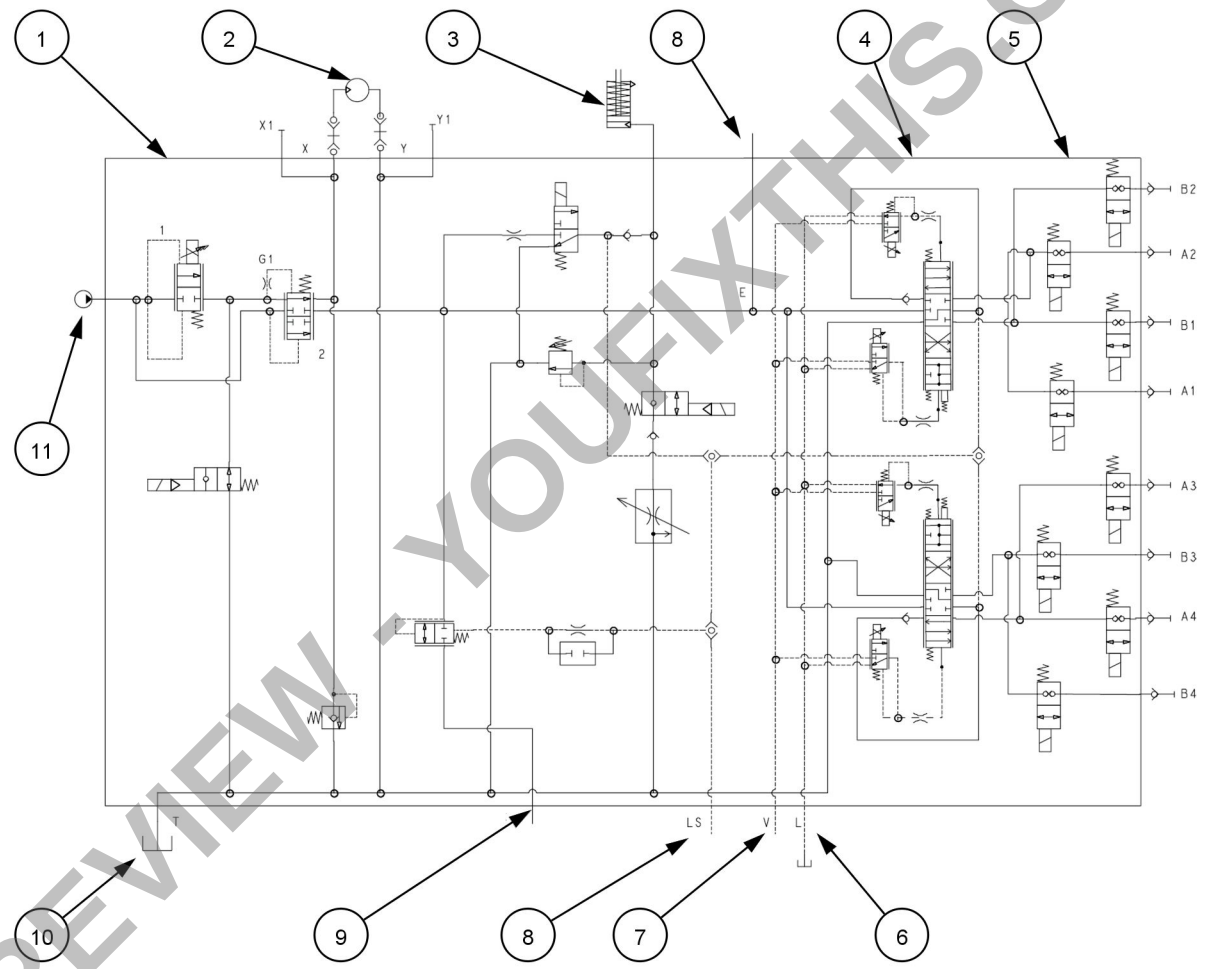

MOIL14TR00171GA 1

Hydraulic scheme

1. Body of the side control valves
2. Hydraulic Motor
3. Front linkage
4. Body of the intermediate control electrovalves of the control valves
7. Pilot pressure tubing
8. Connecting tubing for the stabilizer assembly of the implement linkage
9. Power supply tubing of the rear auxiliary control valves and lift
10. Discharge line

PREVIEW - YOUFIXTHIS.COM

Download full manual at youfixthis.com

Contents

Hitches, drawbars, and implement couplings - 37

[37.110] Rear three-point hitch 37.1

[37.162] Front hitch 37.2

PREVIEW - YOUFIXTHIS.COM

Download full manual at youfixthis.com

Contents

Steering - 41

[41.101] Steering control 41.1

[41.200] Hydraulic control components..... 41.2

PREVIEW - YOUFIXTHIS.COM

Download full manual at youfixthis.com

Contents

Wheels - 44

[44.511] Front wheels. 44.1

PREVIEW - YOUFIXTHIS.COM

Download full manual at youfixthis.com

Heating - Dynamic description

T4.105F With cab [ZDJD11527 -]	MEA --- WE
T4.105LP With cab [ZFJD00717 -]	MEA --- WE
T4.75F With cab [ZDJD10166 -]	MEA --- WE
T4.75LP With cab [ZFJD01559 -]	MEA --- WE
T4.85F With cab [ZDJD11099 -]	MEA --- WE
T4.85LP With cab [ZFJD01714 -]	MEA --- WE
T4.95F With cab [ZDJD10640 -]	MEA --- WE
T4.95LP With cab [ZFJD01191 -]	MEA --- WE

Heating

The heating control knob **(1)** (Fig. **1**) allows the operator to regulate the temperature of the air by increasing or decreasing the circulation of coolant from the engine.

The electric fan control switch **(2)** allows the operator to regulate the quantity of air entering the cab through the vents **(3)** and **(1)** (**Blower potentiometer - Dynamic description (55.051) Figure 2**).

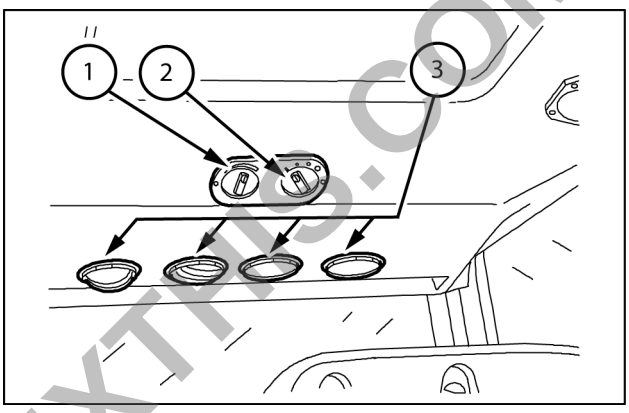

MOLI11F0853AB 1

Temperature control knob (1)

- Turned fully to the left in an anti-clockwise direction = Minimum temperature (hot water circulation off).
- Turned fully to the right in a clockwise direction = Maximum temperature (hot water circulation fully open).

  NOTE: *The total capacity of the cooling system (including the cab heating system) is* ***12.5 l*** *(****3.3022 US gal****) for mod. TN75FA or* ***13.5 l*** *(****3.5663 US gal****) mod. TN85FA and TN95FA.*

PREVIEW - YOUFIXTHIS.COM

Download full manual at youfixthis.com

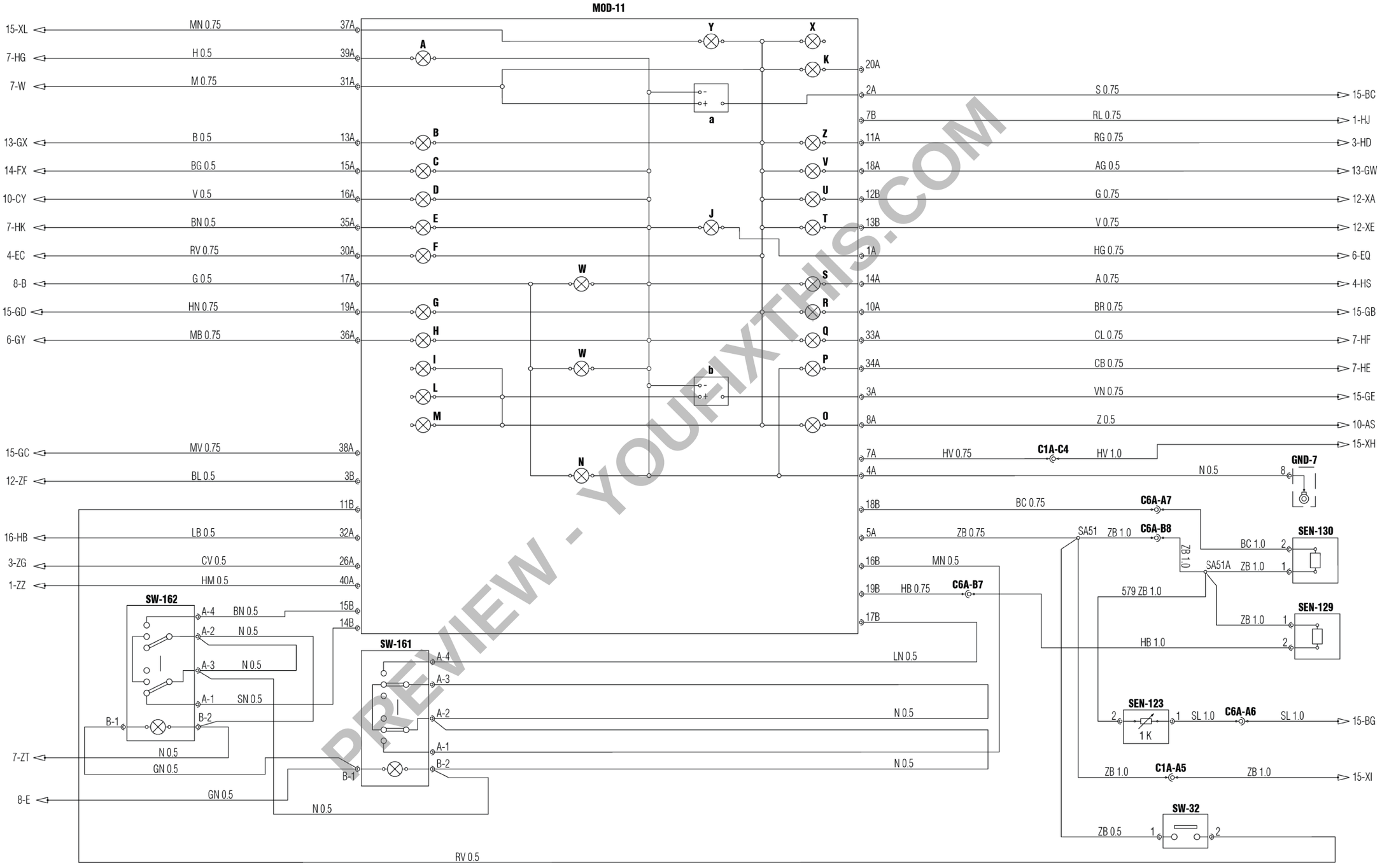

PREVIEW - YOUFIXTHIS.COM

MOLI12SPF0028JA 1

Download full manual at youfixthis.com

Contents

Platform, cab, bodywork, and decals - 90

[90.150] Cab 90.1

[90.151] Cab interior 90.2

[90.154] Cab doors and hatches 90.3

[90.160] Cab interior trim and panels 90.4

PREVIEW - YOUFIXTHIS.COM

Download full manual at youfixthis.com

SPECIAL TOOL INDEX

Genuine	Reference	PAGE
380001613 [Front Axle / Engine Support Bracket]	Engine and crankcase - Remove	10.1 / 3
50162 [Motor Axle Locking Spacer]	Engine and crankcase - Remove	10.1 / 3
380001613 [Front Axle / Engine Support Bracket]	Engine - Install	10.1 / 10
380001612 [Clutch Centralizer /Adjuster]	Clutch hydraulic release control - Alignment	18.1 / 3
380000293 [CLUTCH LEVERS ADJUSTMENT GAUGE]	Clutch hydraulic release control - Alignment	18.1 / 3
380000293 [CLUTCH LEVERS ADJUSTMENT GAUGE]	Clutch hydraulic release control - Alignment	18.1 / 3
380001612 [Clutch Centralizer /Adjuster]	Clutch hydraulic release control - Alignment	18.1 / 4
380000293 [CLUTCH LEVERS ADJUSTMENT GAUGE]	Clutch hydraulic release control - Alignment	18.1 / 4
380000293 [CLUTCH LEVERS ADJUSTMENT GAUGE]	Clutch - Special tools	18.2 / 4
294073 [Clutch Centraliser And Adjuster]	Clutch - Special tools	18.2 / 4
380000256 [Clutch Adjusting Wrench Set]	Clutch - Special tools	18.2 / 4
380001613 [Front Axle / Engine Support Bracket]	Clutch - Special tools	18.2 / 4
380000277 [Exhaust Gas Cylinder Head Valve Guide Reamer]	Transmission drive housing - Remove	21.2 / 6
380001613 [Front Axle / Engine Support Bracket]	Transmission drive housing - Remove	21.2 / 10
380000301 [Rotating Engine Stand]	Transmission drive housing - Disassemble	21.2 / 17
380001615 [Drive Shaft Unit Tie Rod]	Transmission drive housing - Disassemble	21.2 / 18
380001616 [Drive Shaft Retainer]	Transmission drive housing - Disassemble	21.2 / 18
380001616 [Drive Shaft Retainer]	Transmission drive housing - Disassemble	21.2 / 18
380001614 [Gearbox Drive and Driven Shaft Adjuster]	Transmission drive housing - Disassemble	21.2 / 21
380001614 [Gearbox Drive and Driven Shaft Adjuster]	Transmission drive housing - Disassemble	21.2 / 21
380001614 [Gearbox Drive and Driven Shaft Adjuster]	Transmission drive housing - Disassemble	21.2 / 21
380001615 [Drive Shaft Unit Tie Rod]	Transmission drive housing - Disassemble	21.2 / 21
380001616 [Drive Shaft Retainer]	Transmission drive housing - Disassemble	21.2 / 21
380001616 [Drive Shaft Retainer]	Transmission drive housing - Assemble	21.2 / 24
380001615 [Drive Shaft Unit Tie Rod]	Transmission drive housing - Assemble	21.2 / 24
380001614 [Gearbox Drive and Driven Shaft Adjuster]	Transmission drive housing - Assemble	21.2 / 24

PREVIEW - YOUFIXTHIS.COM

Download full manual at youfixthis.com

Contents

INTRODUCTION

Engine 10

[10.001] Engine and crankcase 10.1

Clutch 18

[18.104] Clutch hydraulic release control 18.1

[18.110] Clutch and components 18.2

[18.100] Clutch mechanical release control 18.3

Transmission 21

[21.114] Mechanical transmission 21.1

[21.118] Transmission/Rear drive 21.2

[21.140] Mechanical transmission internal components 21.3

[21.112] Power shuttle transmission 21.4

[21.134] Power shuttle transmission external controls 21.5

[21.154] Power shuttle transmission internal components 21.6

[21.160] Creeper 21.7

[21.162] Reverser 21.8

[21.168] Hi-Lo unit 21.9

Four-Wheel Drive (4WD) system 23

[23.202] Electro-hydraulic control 23.1

[23.304] Four-Wheel Drive (4WD) gearbox 23.2

[23.314] Drive shaft 23.3

Front axle system 25

[25.100] Powered front axle 25.1

[25.102] Front bevel gear set and differential 25.2

[25.108] Final drive hub, steering knuckles, and shafts 25.3

[25.310] Final drives 25.4

Download full manual at youfixthis.com

PREVIEW - YOUFIXTHIS.COM

Powered front axle - Remove

T4.105LP With cab [ZFJD00717 -]	MEA --- WE
T4.105LP Without cab [ZEJD00007 -]	MEA --- WE
T4.75LP With cab [ZFJD01559 -]	MEA --- WE
T4.75LP Without cab [ZFJD01319 -]	MEA --- WE
T4.85LP With cab [ZFJD01714 -]	MEA --- WE
T4.85LP Without cab [ZFJD00163 -]	MEA --- WE
T4.95LP With cab [ZFJD01191 -]	MEA --- WE
T4.95LP Without cab [ZFJD00162 -]	MEA --- WE

⚠ CAUTION

Avoid injury!
Handle all parts carefully. Do not place your hands or fingers between parts. Use Personal Protective Equipment (PPE) as indicated in this manual, including protective goggles, gloves, and safety footwear.
Failure to comply could result in minor or moderate injury.

C0145A

⚠ DANGER

Heavy objects!
Lift and handle all heavy components using lifting equipment with adequate capacity. Always support units or parts with suitable slings or hooks. Make sure the work area is clear of all bystanders.
Failure to comply will result in death or serious injury.

D0076A

Proceed as follows:

NOTE: *You can remove the front axle assembly from the tractor either with the prior removal of the drive shaft, or with the drive shaft installed. The description below refers to removal of the front axle with the drive shaft installed on the tractor. For removal of the drive shaft refer to* ***Gears, shaft, and bearings - Remove Electrohydraulic 4WD (21.140)****.*

1. Disconnect the battery negative cable **(1)**.

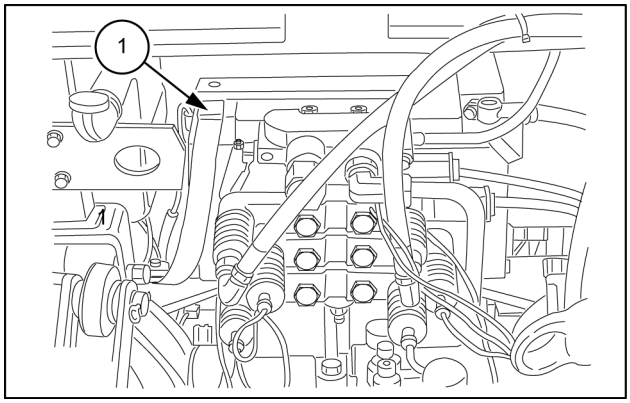

MOIL14TR01681AC 1

PREVIEW.YOUFIXTHIS.COM

Download full manual at youfixthis.com

PREVIEW - YOUFIXTHIS.COM

Download full manual at youfixthis.com

Rear three-point hitch - Sectional view

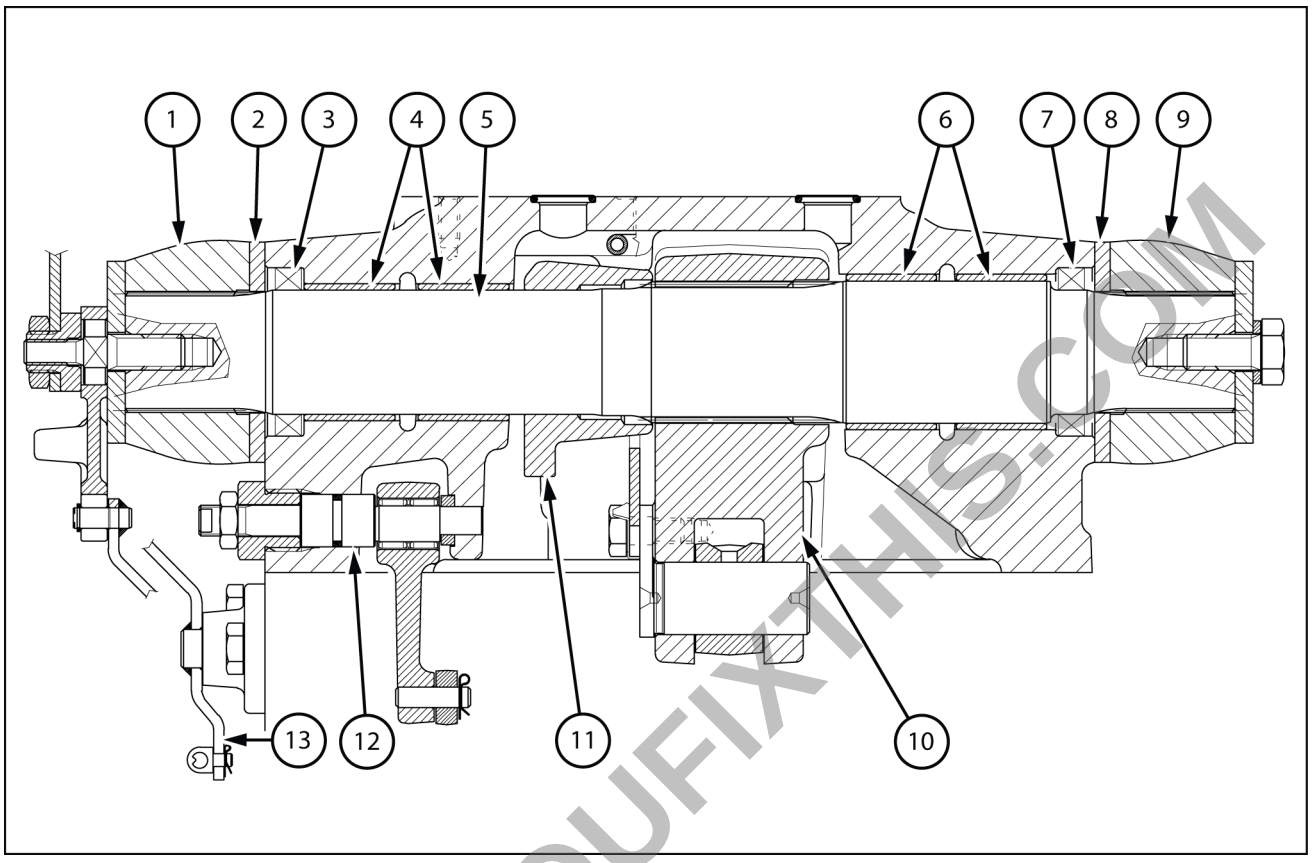

MOLI11F0438FB 1

Cross-sectional view of lift arms drive shaft

1. Right-hand arm
2. Right-hand arm thrust washer
3. Right-hand seal
4. Right-hand shaft support bush **(5)**
5. Lift arm control shaft
6. Left-hand shaft support bush **(5)**
7. Left-hand seal
8. Left-hand arm thrust washer
9. Left-hand arm
10. Internal arm
11. Position control cam
12. LIFT-O-MATIC control pin
13. LIFT-O-MATIC control external lever

PREVIEW - YOUFIXTHIS.COM

Download full manual at youfixthis.com

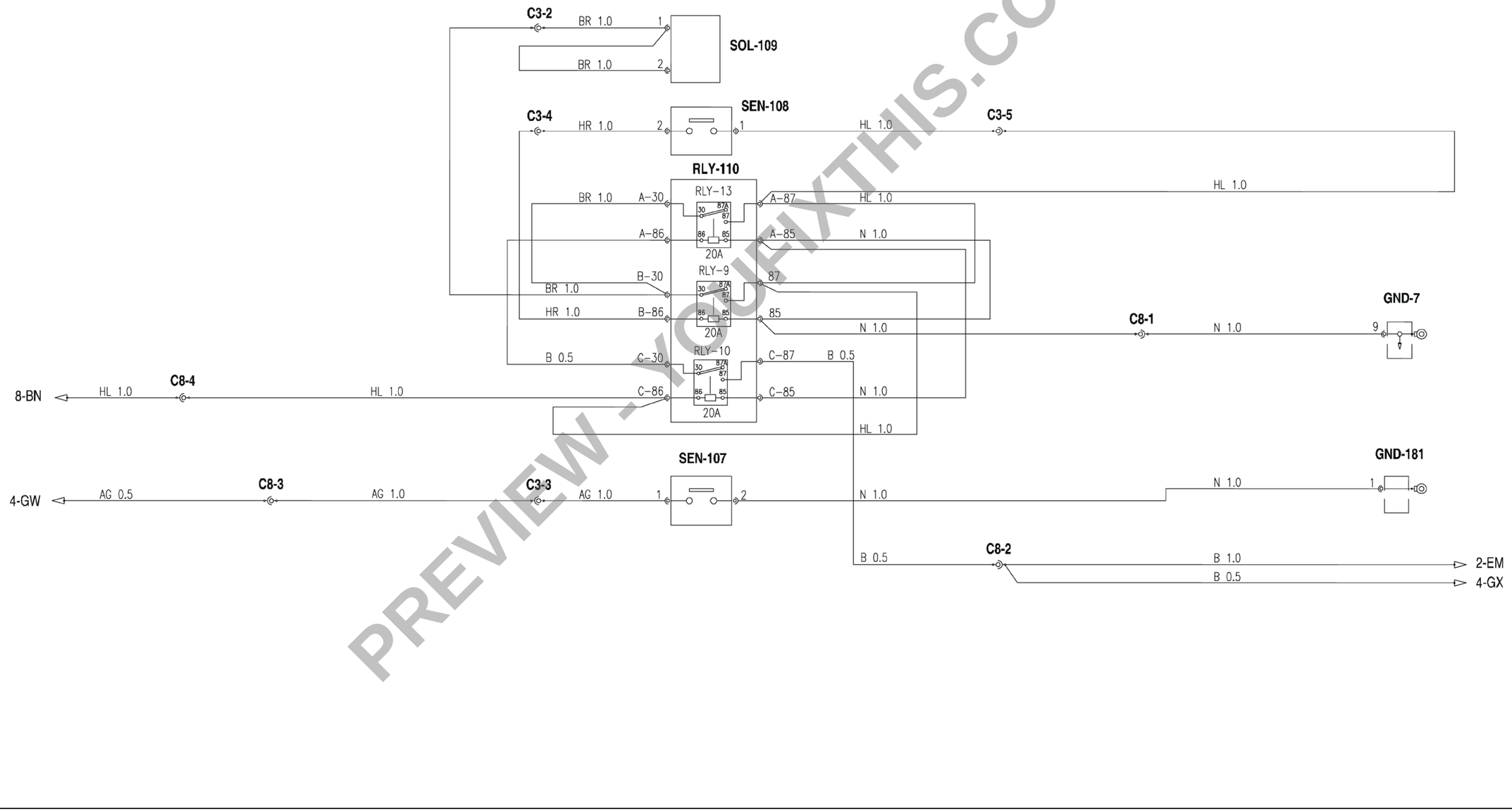

PREVIEW - YOUFIXTHIS.COM

MOLI12SPF0012JA 1

Download full manual at youfixthis.com

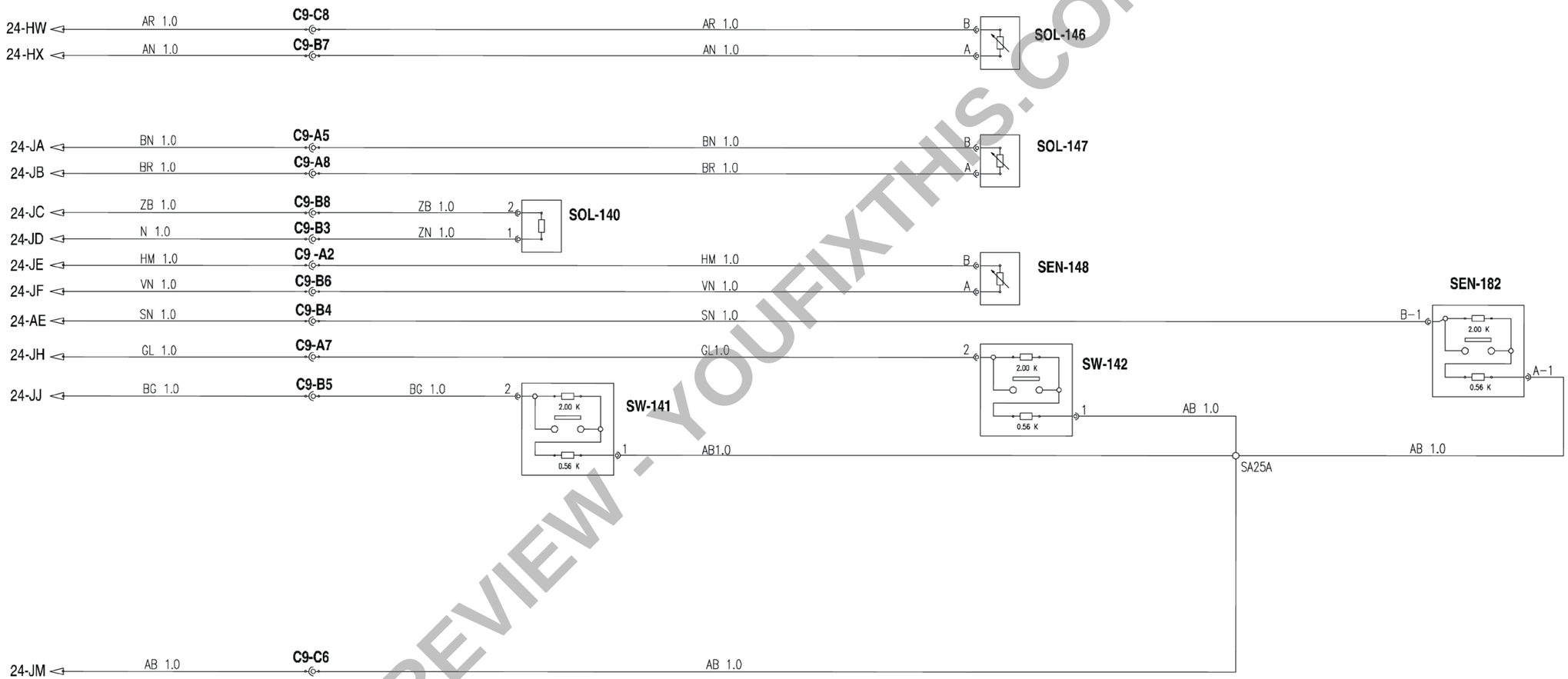

MOLI12SPF0136JA 1

PREVIEW - YOUFIXTHIS.COM

Download full manual at youfixthis.com

SEN−124

For 4WD model

Pin	Col.	Sect.	Pin	Col.	Sect.
1	CN	1.0	-	-	-
1	N	1.0	-	-	-

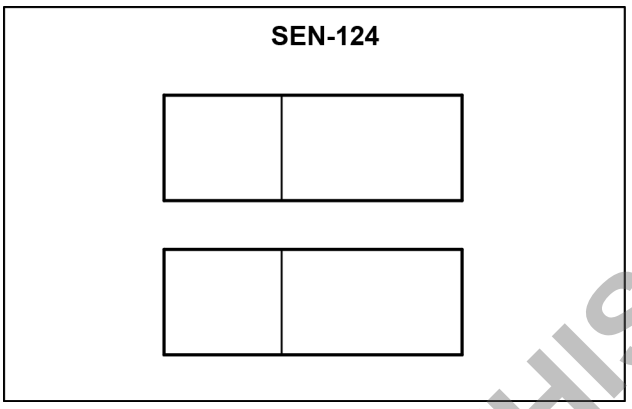

MOLI11F1381AA 4

PREVIEW - YOUFIXTHIS.COM

Download full manual at: youfixthis.com

- Select the operator presence switch option by pressing the switch **(1)** on the side **(B)**.
- By pressing the switch **(2)** it is possible to select between the "YES" and "NO" options; then press the switch **(1)** on the side **(B)** to confirm and pass on to another option.

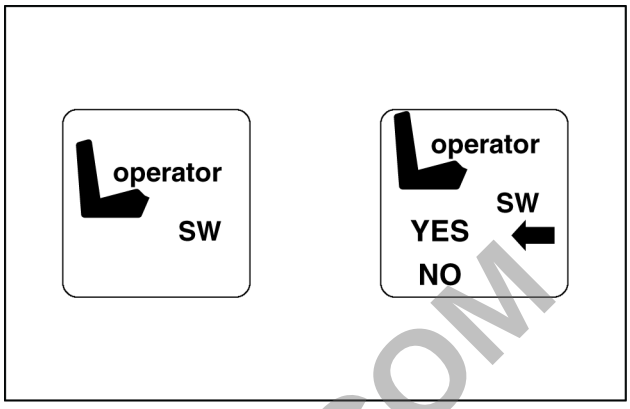

ITIL11T40784A0A 6

- Select the rear P.T.O. sensor option by pressing the switch **(1)** on the side **(B)**.
- By pressing the switch **(2)** it is possible to select between the "YES" and "NO" options; then press the switch **(1)** on the side **(B)** to confirm and pass on to another option.

NOTE: *YES, sensor present: the speed of the P.T.O. is detected by the sensor.*
NO, sensor not present, the P.T.O. speed is calculated according to the engagement data and the speed of engine rotation.

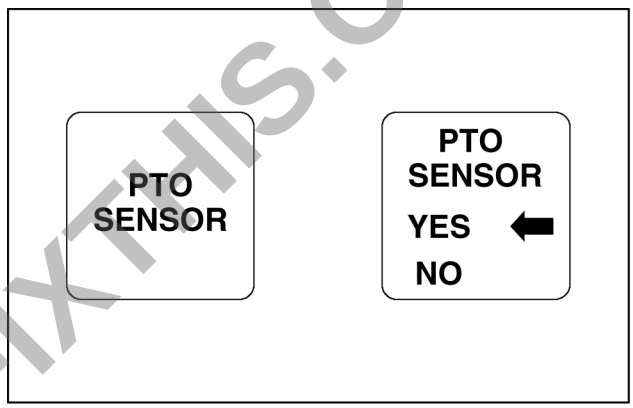

ITIL11T40785A0A 7

- Select the P.T.O. speed option with the switch **(1)** in position **(B)**
- By pressing the switch **(2)** it is possible to select OLD or NEW and with the switch **(1)** in position **(B)** confirm the selection and pass on to another option

NOTE: *OLD = 15/61; NEW = 16/58.*

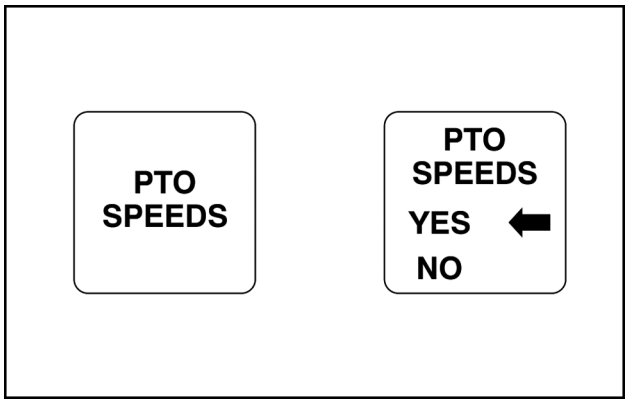

WLSPVNS55C1099A 8

- Select the option of mechanical disengagement of the four−wheel drive according to the steering angle by pressing the switch **(1)** on the side **(B)**.
- By pressing the switch **(2)** it is possible to select between the "YES" and "NO" options; then press the switch **(1)** on the side **(B)** to confirm and pass on to another option.

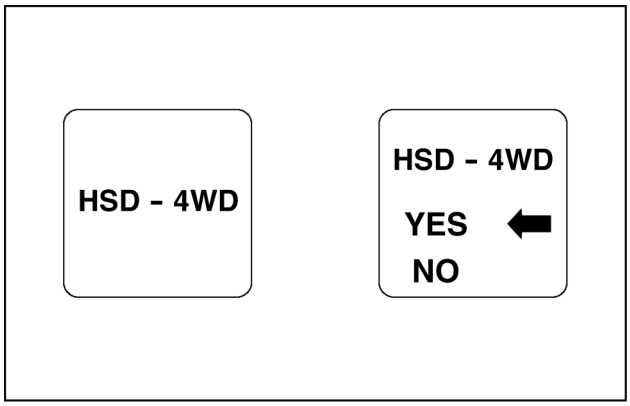

ITIL11T40786A0A 9

PREVIEW - YOUFIXTHIS.COM

Download full manual at youfixthis.com

4711-12V key solenoid activation: Voltage too high

T4.105F With cab [ZDJD11527 -]	MEA --- WE
T4.105LP With cab [ZFJD00717 -]	MEA --- WE
T4.75F With cab [ZDJD10166 -]	MEA --- WE
T4.75LP With cab [ZFJD01559 -]	MEA --- WE
T4.85F With cab [ZDJD11099 -]	MEA --- WE
T4.85LP With cab [ZFJD01714 -]	MEA --- WE
T4.95F With cab [ZDJD10640 -]	MEA --- WE
T4.95LP With cab [ZFJD01191 -]	MEA --- WE

Control Module : Mid mount control unit

NOTE: *When the cause of the error code has been rectified, clear the error code and test the system for normal operation.*

Cause:
The mid mount control unit has detected a high voltage at connector **MOD–4007** pin 25 (C).

Possible failure modes:

1. External power supply connected
2. Faulty charging system
3. Faulty mid mount control unit

Solution:

1. Before proceeding clear the error code. Run the machine under normal conditions and retest.
   A. If the error code is not indicated, check that the system is operating correctly.
   B. If the error code is indicated, continue to step **2**.
2. Check the battery power supply has not been connected to an external power supply.
   A. If an external power supply is connected to the machine, disconnect and test the system for normal operation.
   B. If an external power supply is not connected to the machine, continue to step **3**.
3. Check the battery voltage.
   A. Start the engine and run at **2000 RPM**. If the voltage indicated is not between approximately **12 - 15 V**, continue to test for a fault in the charging system.
   B. If the battery voltage is okay, remove and replace the mid mount control unit.

PREVIEW - YOUFIXTHIS.COM

Download full manual at youfixthis.com

PREVIEW ONLY

You're viewing 25 of 2239 pages

The full manual includes:

- All 2239 pages, complete
- Searchable PDF (find any keyword)
- No watermarks
- Instant download
- Print-ready quality

GET FULL MANUAL NOW

New Holland T4.75F, T4.85F, T4.95F, T4.105F, T4.75LP, T4.85LP, T4.95LP, T4.105LP Service Manual



Scan or click anywhere
youfixthis.com

Click anywhere on this page to get the full manual