8 - TROUBLESHOOTING

FAULT CODE RESOLUTION

Introduction

The following information is intended as a guide to assist in identifying and correcting possible tractor malfunctions and fault conditions.

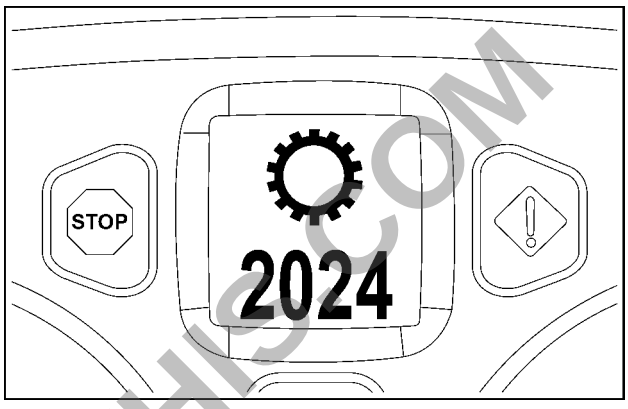

SVIL17TR00611AA 1

Error codes

Your tractor makes extensive use of electronics to control and monitor major components within the drive line, electrical and hydraulic systems. In the unlikely event of a fault occurring in one of these areas, the malfunction will be identified with a symbol and a four or five digit fault code in the Dot Matrix Display on the instrument panel. The first digit(s) of each number provide the general location of the fault and the subsequent numbers confirm the exact nature of the fault.

The code signals the faulty sensor or circuit and the type of fault, e.g. open circuit, short circuit etc. The relevant symbol will be displayed above the code.

Should a fault occur causing the tractor to become disabled, a fault code will be displayed in the instrument panel. If this should happen and you are unable to rectify the fault yourself, contact your authorized dealer and report the fault code displayed.

PREVIEW - YOUFIXTHIS.COM

Download full manual at youfixthis.com

9 - SPECIFICATIONS

General dimensions

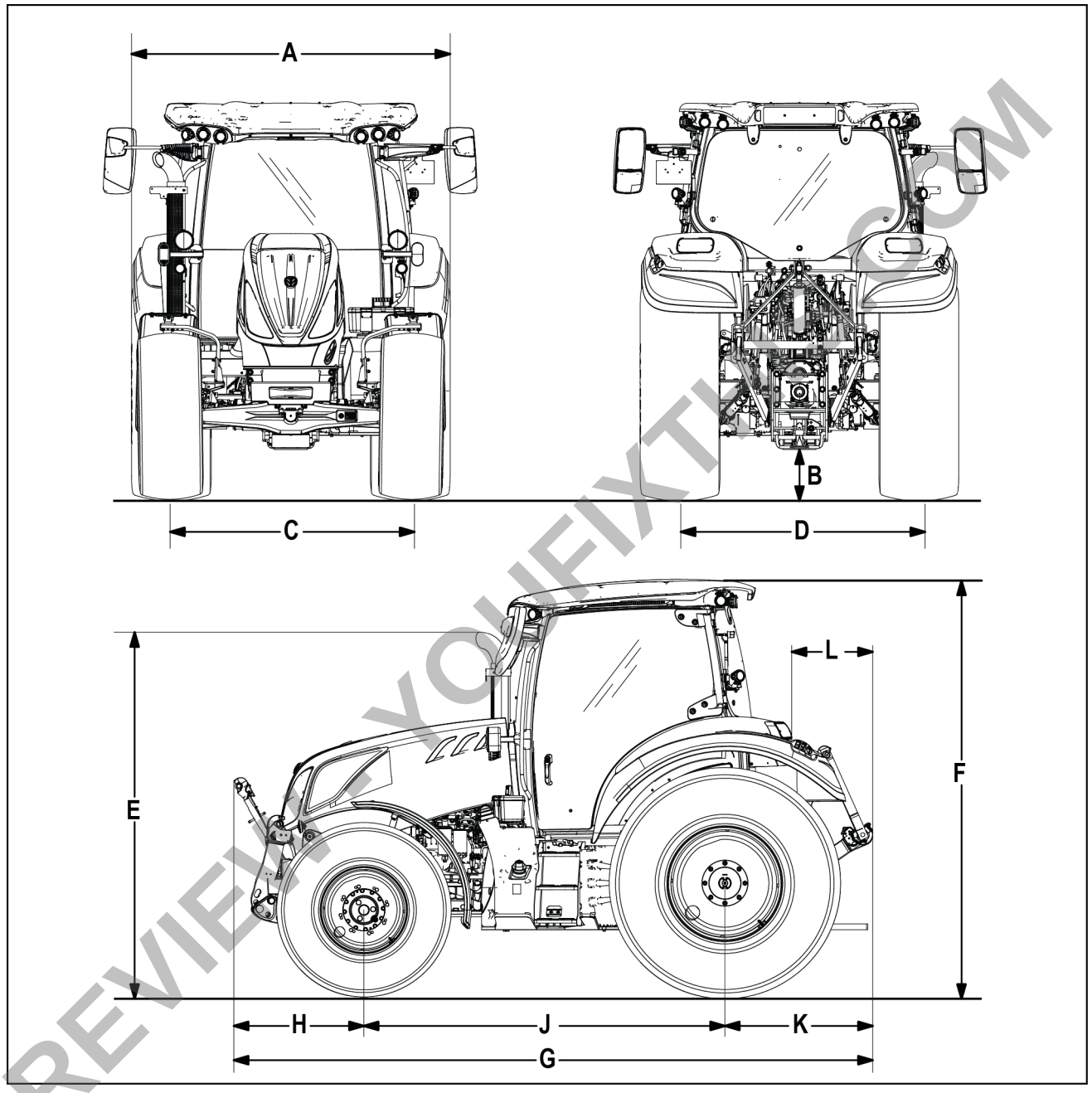

MOIL19TR00051GB 1

NOTE: *The following dimensions are based on standard tractors fitted with tire size as shown. Allowance must be made for tires of larger or smaller dimensions:*

A.	Width across rear fenders	
	Narrow fenders	**1888 mm** (**74.3 in**)
	Wide fenders extensions	**2288 mm** (**90.1 in**)

Download full manual at youfixthis.com

6 - WORKING OPERATIONS

GENERAL INFORMATION

Constant engine speed

With Engine Speed Management (ESM), the operator may pre- set one or two fixed engine speeds appropriate to the work in hand. ESM will maintain a fixed engine speed, it cannot be used to provide a constant ground speed (cruise control).

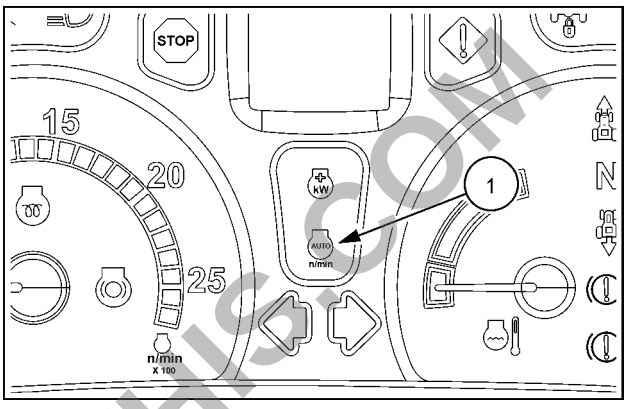

SVIL17TR00619AA 1

With ESM activated the indicator light **(1)** on the Instrument cluster, will illuminate when the system is in operation.

When activated, ESM constantly monitors engine load and speed for any change. If engine load increases and the r.p.m. starts to drop, ESM will electronically adjust the engine speed control unit to compensate, thereby maintaining a constant engine r.p.m.

Setting Engine Speed Management

ESM can be programmed in two ways, either by using the four switches on the Integrated Control Panel (ICP) or through the color display.

Setting with Integrated Control Panel (ICP)

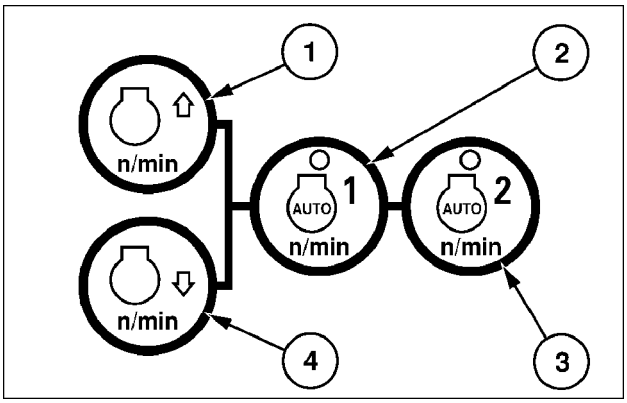

BRL6101B 2

Four switches control the ESM .

1. Increase engine speed.
2. Store/activate programme 1.
3. Store/activate programme 2.
4. Decrease engine speed.

To create ESM , start the engine and set the desired rpm using the engine rpm control or the drive pedal. Press and hold switch **(2)** for **2 s**; the warning light on the switch starts to flash signalling that the current engine rpm is being saved.

After **2 s** the light will stop flashing and will remain on. ESM is now active and operating at the current engine speed.

NOTE: *If the ESM programme key is released whilst the light is flashing, Engine Speed Management will reset to the default speed of* ***850 RPM*** *or the previously programmed engine speed. Depress the ESM programme switch again to re- start the procedure.*

To store a second ESM programme, repeat the above process using switch **(3)** if required.

A programme can be deactivated at any time by depressing the appropriate programme switch.

PREVIEW - YOUFIXTHIS.COM

Download full manual at youfixthis.com

3 - CONTROLS AND INSTRUMENTS

ACCESS TO OPERATOR'S PLATFORM

Introduction

⚠ WARNING

Fall hazard!
Jumping on or off the machine could cause an injury. Always face the machine, use the handrails and steps, and get on or off slowly. Maintain a three-point contact to avoid falling: both hands on the handrails and one foot on the step, or one hand on the handrail and both feet on the steps.
Failure to comply could result in death or serious injury.

W0141A

The cab has been designed for operator protection, comfort and convenience. Inside, the frame, roof, and floor are insulated to reduce noise to a minimum.

A wide opening door on the left-hand side permits entry to the cab aided by convenient grab handles and footsteps with anti-slip treads. The door and rear window are fitted with gas struts to hold them in the fully open position. Additionally, the rear window may be retained in the partially open position for increased ventilation during operation.

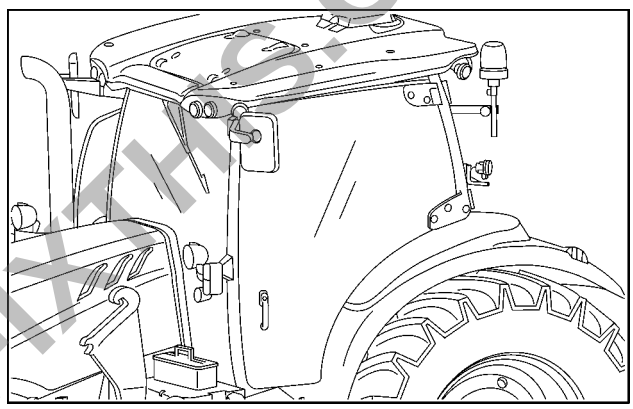

SVIL14TR00156AB 1

The cab features include a fresh air heater/defroster with recirculation, air conditioning, sun visor, tinted glass, interior light, auxiliary power socket, storage facilities, interior/ exterior rear view mirrors and a choice of comfortable seats.

Options include automatic climate control, high visibility roof panel, radio, rear windscreen wash/wipe and electrically operated external rear view mirrors.

Low profile cab

When fitted with optional low roof, the overall cab height is considerably reduced allowing operation in areas of restricted height. The standard specification with low roof includes fixed high visibility roof panel, air conditioning and a pre-wired disposition for the optional radio/cassette/CD player.

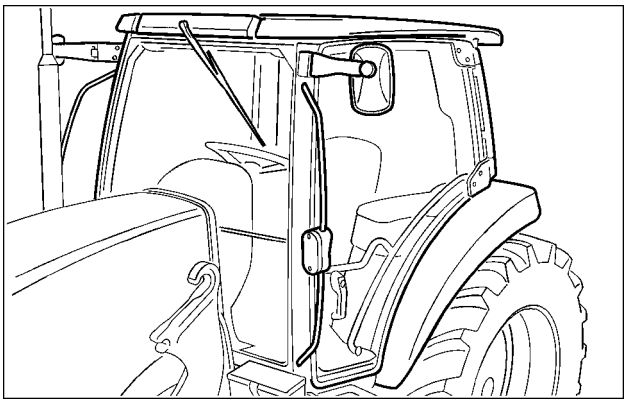

BRH3291A 2

PREVIEW - YOUFIXTHIS.COM

Download full manual at youfixthis.com

7 - MAINTENANCE

GENERAL INFORMATION

Introduction

This section gives full details of the service procedures necessary to maintain your tractor at peak efficiency.

Safety precautions

⚠ WARNING

Moving parts!
Disengage the Power Take-Off (PTO), turn off the engine, and remove the key. Wait for all movement to stop before leaving the operator's position. Never adjust, lubricate, clean, or unplug machine with the engine running. Failure to comply could result in death or serious injury.

W0112A

Read and observe all safety precautions listed in 'Servicing the tractor' and 'Prevention of fire or explosion' in the general information and safety section of this manual.

NOTE: *Dispose of used filters and fluids properly.*

Preventing system contamination

To prevent contamination when changing oils, filters, etc., always clean the area around filler caps, level and drain plugs, dipsticks and filters prior to removal. Before connecting remote cylinders, ensure that the oil contained within them is clean, has not degenerated due to long storage and is of the correct grade.

To prevent dirt entry during greasing, wipe dirt from the grease fittings before greasing. Wipe excess grease from the fitting after greasing.

Warning symbols

A number of maintenance items are represented by symbols that may appear in the display screens. For more information on these symbols, see **3-113** and **8-2**.

During the first 50 hours operation

In addition to the regular maintenance operations listed, check the following items every 10 hours or daily during the first 50 hours of operation:

- Check the oil level of the transmission, rear axle and hydraulics
- Check the wheel nuts for tightness
- Check the oil level of the front axle hub

NOTICE: *Park the tractor on level ground and, where applicable, extend all cylinders before checking oil levels. With some wheel equipment fitted, it may be necessary to raise the front or rear of the tractor to ensure that the machine is level before checking the oil.*

Flexibility of maintenance intervals

The intervals listed in the maintenance chart are guidelines to be used when operating in normal working conditions.

Adjust the intervals for environmental and working conditions. Intervals should be shortened under adverse (wet, muddy, sandy, extremely dusty) working conditions.

Maintenance chart

NOTE: *For each service interval on the maintenance chart, you are also required to perform all prior service intervals that apply. For example, the 1200–hour or annual service will need the 50–hour, 100–hour, 300–hour and 600–hour individual maintenance actions, in addition to the 1200 hour actions.*

Maintenance table **7-15** lists the intervals when routine checks, lubrication, service and/or adjustments should be performed. Use the chart as a quick reference guide when servicing the tractor. The operations follow the chart.

Fuel injector maintenance

The fuel injectors on your tractor are electronically controlled and therefore do not require periodic servicing or adjustment.

PREVIEW - YOUFIXTHIS.COM

Download full manual at youfixthis.com

ALARM(S)

Fault codes and symbols

DMD	Light	Fault code	Area of fault	Action
	-	1---	Electronic hitch control	The system fault symbols relate to an operational fault in one or more of the tractors main components, either electrical, mechanical or hydraulic. The appearance of a fault symbol may be accompanied by a four digit fault code. Consult your authorized dealer.
	-	2---	Transmission	
	-	3---	Engine	
	-	4---	Rear electronic remote control valves	
	-	45--	Front electronic remote control valves	
	-	5---	Rear PTO system	
	-	6---	Front wheel drive	
	-	7---	Rear differential lock	
	-	8---	Front PTO system	
	-	9---	Front three-point hitch	
	-	10--	Suspended front axle	
	-	12--	Electronic Park Lock	
	-	125--	Braking System	
	-	126--	ABS System	
	-	128--	Intelligent Trailer Brake Valve	
	-	13--	Universal Control Module (UCM)	

PREVIEW - YOUFIXTHIS.COM

Download full manual at youfixthis.com

Engine

	AutoCommand			
	T5.110	T5.1120	T5.130	T5.140
Engine power at rated speed	**74 kW** (**101 Hp**)	**81 kW** (**110 Hp**)	**88 kW** (**120 Hp**)	**96 kW** (**131 Hp**)
Maximum engine power at **1800 RPM** (ECER120)	**81 kW** (**110 Hp**)	**88 kW** (**120 Hp**)	**96 kW** (**131 Hp**)	**103 kW** (**140 Hp**)
Valves per cylinder	4 valves			
Intake	Turbocharged with intercooler			
Bore	**104 mm** (**4.1 in**)			
Stroke	**132 mm** (**5.2 in**)			
Displacement	**4485 cm³** (**274 in³**)			
Compression Ratio	178 : 1			
Ignition order	1.3.4.2			
Rated engine speed	**2200 RPM**			
Low idle speed	**650 RPM** +/- 100			
High idle speed	**2375 RPM** +/- 50			
Valve tappet clearance (cold)				
- Aspiration	**0.250 mm** (**0.010 in**)			
– Unloading	**0.510 mm** (**0.020 in**)			

PREVIEW - YOUFIXTHIS.COM

Download full manual at youfixthis.com

Differential lock

⚠ WARNING

Steering is difficult with the differential lock engaged. An accident could result.
During field operation, use the differential lock for traction improvement but release for turning at row end. Do not drive at high speeds or on roads with the differential lock engaged.
Failure to comply could result in death or serious injury.

W0292A

Four wheel drive tractors have a differential lock installed in the front and rear axles to lock all four wheels together in conditions where wheel slip may occur.

The differential locks are controlled by two switches on the integrated control panel to the right of the seat.

The differential lock(s) may be operated in manual mode or automatic mode. To confirm mode selected, the appropriate symbol on the switch will illuminate when engaged.

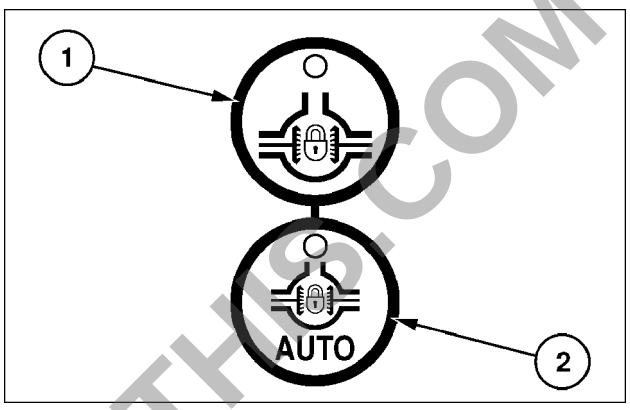

BRL6102B 1

NOTICE: *If wheel spin is encountered, reduce engine speed before engaging the differential lock, to avoid shock loads to the transmission.*

Operating in Manual Mode

In slippery conditions, momentarily press the switch **(1)** figure **1** to lock both wheels together. The differential lock(s) will engage and warning lights in the switch and instrument cluster **(1)** will light up.

When one brake pedal is applied or if the switch is depressed again, disengagement will occur and the warning lights in the switch and instrument cluster will go out. Press the switch again to reengage the differential lock(s).

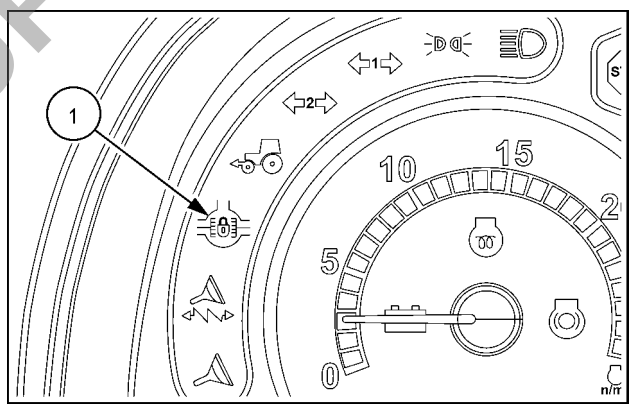

SVIL17TR00620AA 2

PREVIEW - YOUFIXTHIS.COM

Download full manual at youfixthis.com

FORWARD CONTROLS

Ignition key

The key- start switch is a five- position switch and activates the grid heater cold start device, accessories and the starting motor.

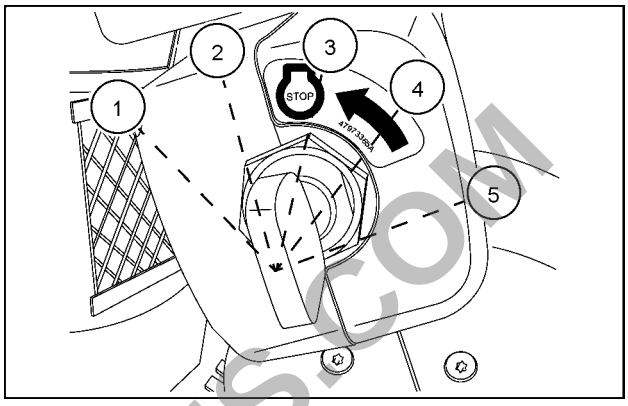

SVIL17TR01036AA 1

The key- start switch positions are as follows:

Position 1	Not used
Position 2	OFF
Position 3	Accessories ON
Position 4	Warning lights, instruments and Grid Heater ON
Position 5	Grid heater ON, Starter motor engaged

NOTICE: *Never push or tow the tractor to start the engine. Use an auxiliary battery and jump leads.*

NOTE: *Neutral start switches prevent operation of the starting motor unless the shuttle lever is in the neutral* ***(N)*** *position.*

Hazard light switch

Press the left- hand side of the switch **(1)** to operate all the turn signals simultaneously. The switch will flash with the turn signals and also the indicator lights in the instrument cluster.

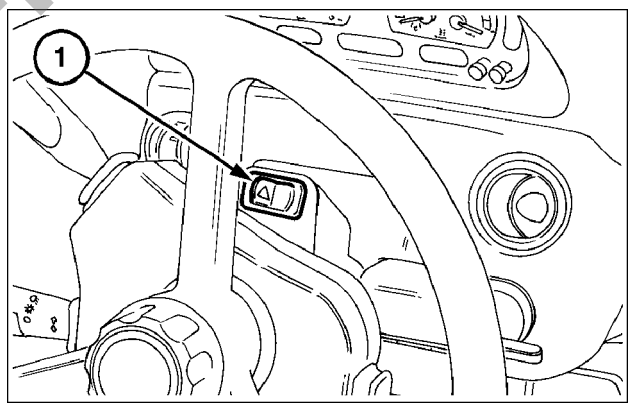

BSE3693A 1

PREVIEW - YOUFIXTHIS.COM

Download full manual at youfixthis.com

MAINTENANCE CHART

Maintenance chart

Maintenance action	Replace	Drain fluid	Check	Cleaning	Grease	Charging	Bleed	Change fluid	Adjust	Page no.
WHEN THE WARNING LIGHT IS ON										
Change the engine air cleaner outer element	x									7-17
Drain the fuel system water separator		x								7-18
Check the brake fluid level			x							7-19
EVERY 10 HOURS OR EACH DAY										
Check the engine coolant level			x							7-20
Check the engine oil level			x							7-21
Check the remote control valve drain bottles			x							7-22
Check windscreen washer reservoir			x							7-23
Drain air reservoir on air operated trailer brake		x								7-24
FIRST 50 HOURS										
Service operations			x							7-25
EVERY 50 HOURS										
Clean the cab air filter				x						7-26
All grease fittings					x					7-28
Check the front and the rear wheel nuts			x							7-34
Check the tire pressures and the tire condition			x							7-35
EVERY 100 HOURS										
Clean the cooler section				x						7-36
EVERY 600 HOURS										
Adjust the hand brake									x	7-37
Check the battery fluid level			x							7-38
Change engine oil and filter	x									7-40
Change the first stage fuel filter and the fuel filter element	x									7-42
Change the engine air cleaner outer element	x									7-44
Change the hydraulic charge pump oil filter and the transmission oil filter	x									7-45
Check the engine air intake connections			x							7-46
Check the transmission oil cooler pipe couplings			x							7-47
Clean the DEF/AdBlue in-line filter				x						7-48
Check the transmission oil level, the rear axle oil level and the hydraulic oil level			x							7-49
Check the 4WD front axle differential oil level and the hubs oil level			x							7-50
Check the front PTO gearbox oil level - Oil Level			x							7-51
Inspect the poly V-belt			x							7-52
Inspect the compressor drive belt			x							7-53
Change the 4WD planetary hub oil							x			7-54
EVERY 1200 HOURS OR ANNUALLY										
Change the cab air filters	x									7-55
Oil filters - Replace	x									7-57
Change the 4WD differential oil							x			7-58
Change the front PTO gearbox oil							x			7-59
Grease the rear axle shaft bearing					x					7-60
EVERY 1200 HOURS OR EVERY 2 YEARS										
Change the engine air cleaner inner element	x									7-61

PREVIEW - YOUFIXTHIS.COM

Download full manual at youfixthis.com

Contents

1 GENERAL INFORMATION

Note to the owner 1-1
Intended use 1-3
Metric and imperial units abbreviations 1-5
Electro-magnetic interference (EMC) 1-7
Product identification 1-8
Engine identification 1-9
Drive line identification 1-10
Cab — Certification plate 1-11
Product identification plate 1-12
Noise level information sheet 1-13
Programming tractor functions 1-14
Operator's manual storage 1-15
Before operating the tractor 1-16
International symbols 1-17
Vibration level information sheet 1-18
Machine orientation 1-19
Selective Catalytic Reduction (SCR) system 1-20

2 SAFETY INFORMATION

Safety precautions 2-1
Safety Decals 2-2
Safety rules 2-9
Burn prevention 2-16
Prevention of fire or explosions 2-17
Fire extinguisher 2-18
Protection offered by the tractor 2-19
Hazardous substances 2-22
Ecology and the environment 2-23
Towing the tractor for recovery 2-24
Emergency exit 2-25
Wheel chocks 2-26
Intended use statement 2-27
Instructor's seat 2-29
Safety aspects in accordance with Regulation (EU) 1322/2014 - Annex XXII and subsequent amendments and modifications 2-30

3 CONTROLS AND INSTRUMENTS

ACCESS TO OPERATOR'S PLATFORM

Introduction 3-1
Cab air filters 3-5
In cab storage (where fitted) 3-7
Cable and wiring routing 3-8
Mobile telephone usage 3-8
Implement monitor installation 3-9

PREVIEW - YOUFIXTHIS.COM

Download full manual at youfixthis.com

2 - SAFETY INFORMATION

Safety precautions

Personal safety



This is the safety alert symbol. It is used to alert you to potential personal injury hazards. Obey all safety messages that follow this symbol to avoid possible death or injury.

Throughout this manual you will find the signal words DANGER, WARNING, and CAUTION followed by special instructions. These precautions are intended for the personal safety of you and those working with you.

Read and understand all the safety messages in this manual before you operate or service the machine.

⚠ DANGER indicates a hazardous situation that, if not avoided, will result in death or serious injury.

⚠ WARNING indicates a hazardous situation that, if not avoided, could result in death or serious injury.

⚠ CAUTION indicates a hazardous situation that, if not avoided, could result in minor or moderate injury.

FAILURE TO FOLLOW DANGER, WARNING, AND CAUTION MESSAGES COULD RESULT IN DEATH OR SERIOUS INJURY.

Machine safety

NOTICE: *Notice indicates a situation that, if not avoided, could result in machine or property damage.*

Throughout this manual you will find the signal word Notice followed by special instructions to prevent machine or property damage. The word Notice is used to address practices not related to personal safety.

Information

NOTE: *Note indicates additional information that clarifies steps, procedures, or other information in this manual.*

Throughout this manual you will find the word Note followed by additional information about a step, procedure, or other information in the manual. The word Note is not intended to address personal safety or property damage.

PREVIEW - YOUFIXTHIS.COM

Download full manual at youfixthis.com

INSTRUMENT CLUSTER

Analog Digital Instrument Cluster (ADIC) 3-63
Gauges 3-64
Gauges 3-64
Indicator and warning lights 3-65
Displays 3-67
Keypad basic 3-70
Keypad enhanced 3-71
Keypad enhanced 3-73
Selecting or changing the display settings 3-75
Ground speed calibration 3-76
Active and Manual Catalyst Management 3-79
Performance monitor 3-81
Armrest color display 3-86
Pop-up screens on color display 3-87
Performance monitor on color display 3-92
Programming the displays 3-97
Alarm functions 3-100
Accessing stored fault codes 3-102
Selective Catalytic Reduction (SCR) exhaust treatment - Overview 3-103
Selective Catalytic Reduction (SCR) exhaust treatment - Overview 3-112
Warning and advisory symbols 3-113

4 OPERATING INSTRUCTIONS

COMMISSIONING THE UNIT

Refueling the tractor 4-1

STARTING THE UNIT

Starting the engine 4-3
Grid heater cold start aid (where fitted) 4-5
Fuel heater (where fitted) 4-5
Coolant immersion heater (where fitted) 4-6
Transmission oil heater (where fitted) 4-7
Starting the engine With a flat battery 4-8

STOPPING THE UNIT

Stopping the engine 4-9
Automatic engine shutdown 4-10

MOVING THE UNIT

Cold temperature operation 4-11
Low idle speed management 4-13

PREVIEW - YOUFIXTHIS.COM

Download full manual at youfixthis.com

⚠ Hazardous chemicals ⚠

If you are exposed to or come in contact with hazardous chemicals you can be seriously injured. The fluids, lubricants, paints, adhesives, coolant, etc. required for the function of your machine can be hazardous. They may be attractive and harmful to domestic animals as well as humans.

Material Safety Data Sheets (MSDS) provide information about the chemical substances within a product, safe handling and storage procedures, first aid measures, and procedures to take in the event of a spill or accidental release. MSDS are available from your dealer.

Before you service your machine check the MSDS for each lubricant, fluid, etc. used in this machine. This information indicates the associated risks and will help you service the machine safely. Follow the information in the MSDS, and on manufacturer containers, as well as the information in this manual, when you service the machine.

Dispose of all fluids, filters and containers in an environmentally friendly manner, respecting the current regulations and laws on the subject of environmental protection. For correct information on disposal, contact your local waste disposal centre or your dealer.

You must store fluids and filters in accordance with local laws and regulations. Use only appropriate containers for the storage of chemicals or petrochemical substances.

Keep the batteries out of the reach of children or other unauthorized people.

Applied chemicals require additional precautions. Obtain complete information about the chemicals from the manufacturer or from the distributor before you use the chemicals.

⚠ Utility safety ⚠

When digging or using ground engaging equipment, be aware of buried cables and other services. Contact your local utilities or authorities, as appropriate, to determine the locations of services.

Make sure that the machine has sufficient clearance to pass in all directions. Pay special attention to overhead power lines and hanging obstacles. High voltage lines may require significant clearance for safety. Contact local authorities or utilities to obtain safe clearance distances from high voltage power lines.

Retract raised or extended components, if necessary. Remove or lower radio antennas or other accessories. Should a contact between the machine and an electric power source occur the following precautions must be taken:

- Stop the machine movement immediately.
- Apply the park brake, stop the engine, and remove the key.
- Check if you can safely leave the cab or your actual position without contact with electrical wires. If not, stay in your position and call for help. If you can leave your position without touching lines, jump clear of the machine to make sure that you do not make contact with the ground and the machine at the same time.
- Do not permit anyone to touch the machine until power has been shut off to the power lines.

⚠ Electrical storm safety ⚠

Do not operate the vehicle during an electrical storm.

If you are on the ground during an electrical storm, stay away from machinery and equipment. Seek shelter in a permanent, protected structure.

If an electrical storm should strike during operation, remain in the cab. Do not leave cab or operator's platform. Do not make contact with the ground or objects outside the machine.

⚠ Mounting and dismounting ⚠

Mount and dismount the machine only at designated locations that have handholds, steps or ladders.

Do not jump off of the machine.

Make sure that steps, ladders, and platforms remain clean and clear of debris and foreign substances. Injury may result from slippery surfaces.

Face the machine when you mount and dismount the machine.

Maintain a three-point contact with steps, ladders, and hand holds.

Never mount or dismount from a machine that is in motion.

Do not use the steering wheel or other controls or accessories as handholds when entering or exiting the cab or operator’s platform.

PREVIEW - YOUFIXTHIS.COM

Download full manual at youfixthis.com

Swivel

The swivel is released by pulling the locking lever upwards. It allows free swivelling of the driver's seat to the right or left up to an end stop.

The swivel can be locked in an additional locking position when swivelling to the right.

NOTICE: *Do not operate the locking lever for the swivel while driving.*

After the adjustment, the locking lever must latch into the desired position with an audible click. It should not be possible to move the driver's seat into another position when it is locked. For driving, it should be adjusted to the middle position.

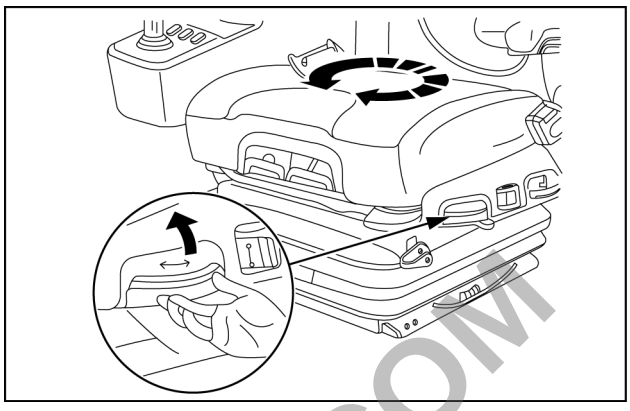

SVIL16TR01977AB 6

Fore/aft isolator

Under certain driving conditions, it is useful to activate the fore/aft isolator. This means that shock impacts in the driving direction can be better absorbed by the driver's seat.

1 = Fore/aft isolator OFF

2 = Fore/aft isolator ON

After the adjustment of position 1, the locking lever must latch into the desired position. For that, the seat must be pressed backwards until it latches with an audible click.

It should not be possible to move the fore/aft isolator into another position when it is locked.

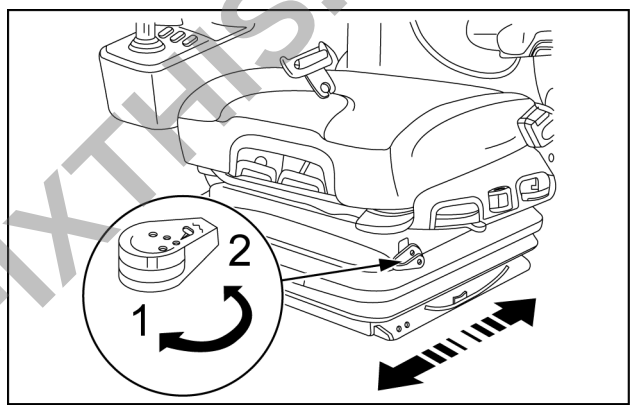

SVIL16TR01978AB 7

Fore/aft adjustment

The fore/aft adjustment is released by lifting the locking lever.

NOTICE: *Do not operate the locking lever for the swivel while driving.*

After the adjustment, the locking lever must latch into the desired position with an audible click. It should not be possible to move the driver's seat into another position after it has been locked.

Do not lift the locking lever with your leg or calf.

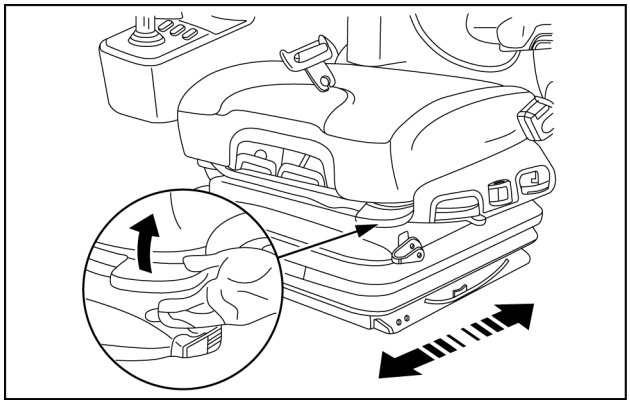

SVIL16TR01979AB 8

PREVIEW - YOUFIXTHIS.COM

Download full manual at youfixthis.com

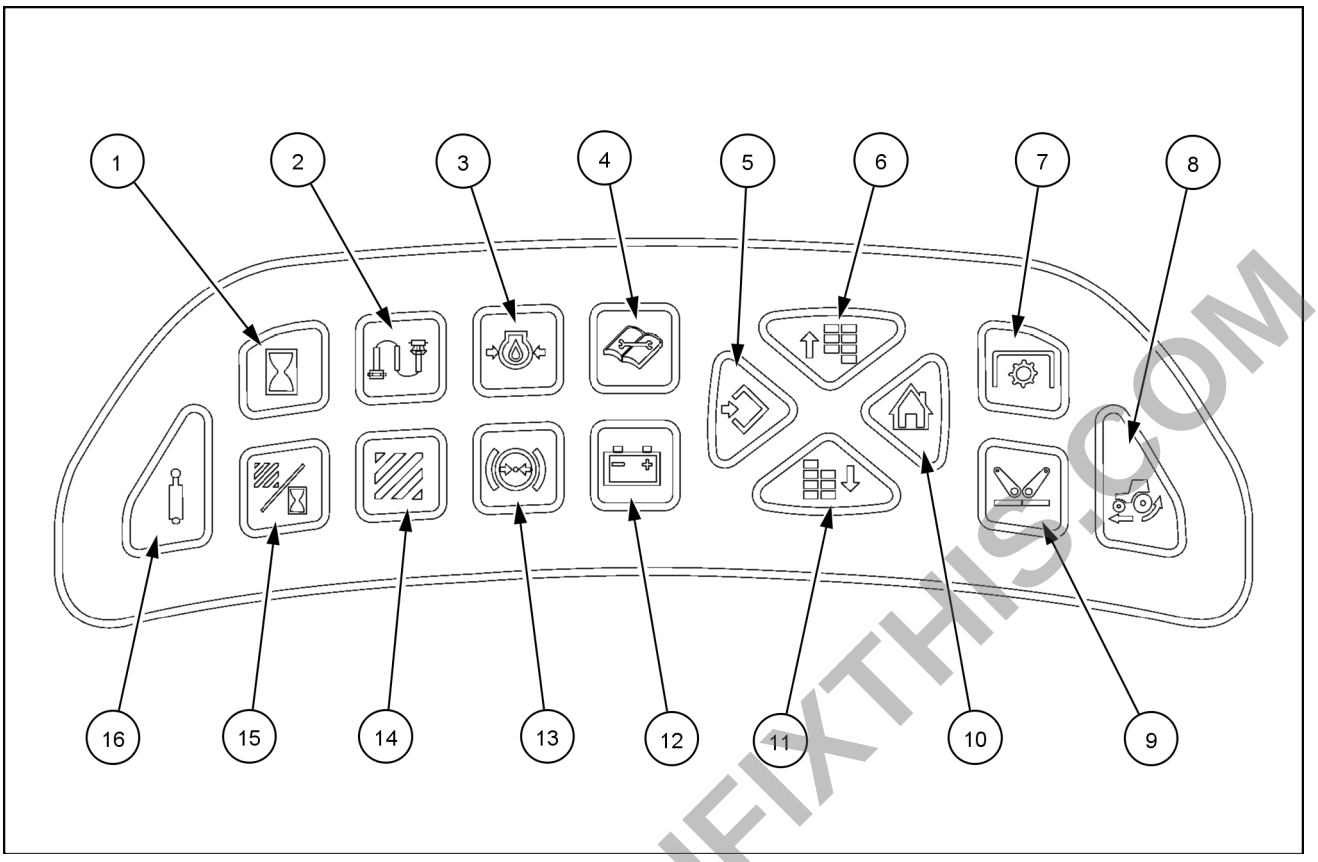

SVIL17TR00703FA 2

11. Menu Scroll Down or Digit Select **(D)**. Depress this key to scroll downwards through the menu or select an alternative digit in the Dot Matrix Display.
12. Battery Voltage **(D)**. With the engine running, touch the key to display the battery symbol together with a digital display of the battery voltage.
13. Trailer Brake Air Pressure **(D)**. Depress to display the trailer brake air pressure bargraph.
14. Area Accumulator **(D)**. The total area worked will be displayed in hectares or acres depending on the ground speed unit selected.
15. Area Per Hour Forecaster **(D)**. Touch this key and the area/hour symbol will display together with a forecast of the area that will be worked in one hour if the current rate of work is continued.
16. Remote Valve Operation **(D)**. The display will show the flow rate through each valve as a percentage (%), the direction of cylinder movement (extend or retract) and the number of the valve selected.

NOTE: *If the radar option is not installed, area per hour calculations are based on axle speed and are subject to inaccuracies caused by any wheel slip that may occur.*

PREVIEW - YOUFIXTHIS.COM

Download full manual at youfixthis.com

Hydrocarbon management

The display	Panel light	Warning Lamp	Alarm	Cause	Action
AUTO n/min	-	flashing **4 s**/ continuous	-	The engine low idle speed has been increased to increase the exhaust temperatures towards SCR operating levels. This is desired when operating at lower temperatures or with lighter engine loads.	-
n/min	-	flashing **4 s**/ continuous	-	The engine desires to increase the engine speed to increase the exhaust temperatures towards SCR operating levels. However this automatic idle speed increase will not automatically happen if machine features are being actively used (e.g. transmission in gear, PTO activated, remote hydraulics activated). This increase is desired when operating at lower temperatures or with lighter engine loads.	Increase engine RPM if acceptable or simply ignore the message.

PREVIEW - YOUFIXTHIS.COM

Download full manual at youfixthis.com

Emblem	Function	Emblem	Function
	Choose target speed range F1		Choose target speed range F2
	Choose target speed range F3		Set a new target speed
	Target speed forward		Target speed reverse

Triggers

Emblem	Description	Emblem	Description
	Time in seconds		Distance in meters
	Shuttling from reverse to forward		Shuttling from forward to reverse
	Rear PTO ON		Rear PTO OFF
	Front PTO ON		Front PTO OFF
	Rear hitch raise		Rear hitch lower
	Front hitch raise		Front hitch lower
	Not used		Not used

PREVIEW - YOUFIXTHIS.COM

Download full manual at youfixthis.com

REAR POWER TAKE-OFF

Power Take-Off (PTO) operating precautions

⚠ WARNING

Avoid injury!
Observe ALL precautions listed below when operating Power Take-Off (PTO) driven equipment.
Failure to comply could result in death or serious injury.

W0435A

NOTE: *Your tractor is designed for using Power Take-Off (PTO) shafts of Category 1 (6 spline shaft) and Category 2 (21 spline shaft). DO NOT use PTO shafts of Category 3 (20 spline shaft).*

- Check that you are using the correct PTO speed for the implement. Follow the instructions in the equipment operator's manual.
- Ensure that the PTO guard is installed when using PTO driven equipment.
- Do not wear loose clothing when operating PTO driven equipment.
- Firmly apply the parking brake, place the shuttle lever in neutral and block all four wheels before operating any stationary PTO equipment.
- Do not approach, clean or adjust PTO driven equipment while the tractor engine is still running. Disengage the PTO and wait until the PTO and equipment stops. Switch off the engine before getting off the tractor.
- With the engine stopped, the PTO brake is released and the shaft may be turned by hand to aid the installation or removal of the implement PTO shaft.

PREVIEW - YOUFIXTHIS.COM

Download full manual at youfixthis.com

Fast raise/lower manoeuvres

Front Hitch fast raise/lower operations are performed by depressing and holding the function switch **(1)** and operating the rear EDC Fast raise/lower switch **(4)**, figure **4**, once, on the multi functional handle.

NOTICE: *Care should be take when attempting to activate a fast movement of the front hitch, if the fast raise/lower switch is depressed prior to operating the function switch, because this will lead to activating the rear hitch.*

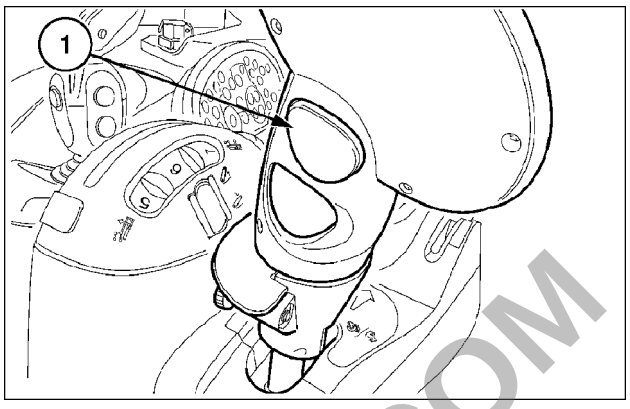

BRL6113C 3

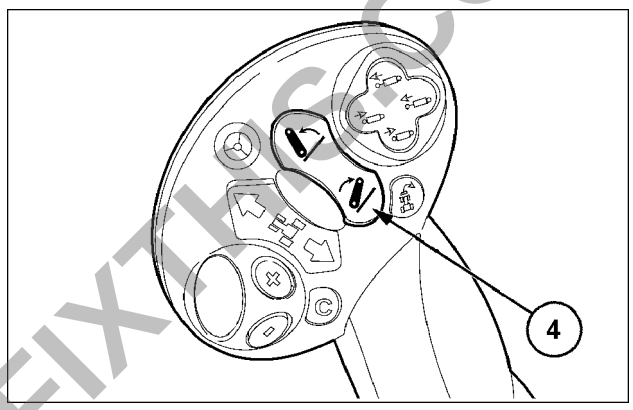

SS12A166 4

A raise operation will bring the front linkage to the position set by the height limit control knob **(2)**.

A lower operation will bring the front linkage to the position set by the lower limit control knob **(1)**.

The fast raise and fast lower operations can enable/capture the front hitch. The initial movement will be slow to allow the system to synchronize the component settings.

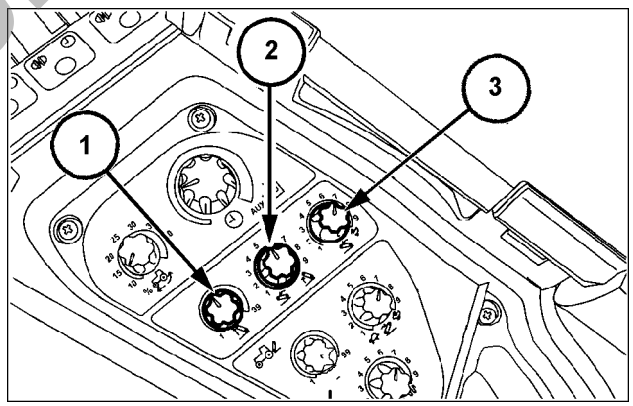

SS12A165 5

Drop rate setting

A drop rate control knob **(3)**, figure **5** adjusts the speed at which the front hitch drops during the lowering cycle. Position 1 selects the slowest drop and is denoted by the tortoise symbol, position 9 provides the fastest rate of drop and is denoted by the rabbit.

Turning the knob fully counter clockwise, to the lock symbol, turns off the front hitch management system.

NOTE: *Front hitch management position control only operates in reaction to deliberate adjustments of the height limit potentiometer. The system will not correct the position due to oil leakage.*

PREVIEW - YOUFIXTHIS.COM

Download full manual at youfixthis.com

Operating several remote control valves simultaneously or remote control valves and three-point hitch simultaneously

If operating two or more remote control valves simultaneously or remote control valves and the hydraulic lift, the flow through the valves should be adjusted using the enhanced keypad to provide a partial flow, as previously described in Setting the maximum flow rate. If not so adjusted, all the available flow may be directed to the full flow circuit when the pressure in that circuit is less than that of the other circuits in use.

NOTE: *For equipment using more than one remote valve, the hydraulic service with the highest priority should be connected to the valve that has been set to provide oil flow priority, see page* ***6-163****.*

Bleeding remote cylinders

When connecting a cylinder with trapped air, i.e., a new cylinder, one that has been out of service or one that has had the hoses disconnected, it will be necessary to bleed the cylinder to remove the air.

With the hoses connected to the remote control valve couplers at the rear of the tractor, position the cylinder with the hose end uppermost and extend and retract the cylinder seven or eight times using the remote control valve operating lever.

Check the rear axle oil level before and after operating a remote cylinder.

NOTICE: *All hydraulic hoses should have a minimum temperature rating of* ***125 °C*** *(****257 °F****). Pressure and sensing hoses should be rated at* ***295 bar*** *(****4278 psi****) working pressure.*

PREVIEW - YOUFIXTHIS.COM

Download full manual at youfixthis.com

Hydraulic trailer brakes - Dual-line, compatible with trailers with universal single line

⚠ WARNING

Loss of control hazard!
One-sided brake force exists if you do not use the brake pedal latch, and if you do not depress the left and right pedals at the same time. ALWAYS use the brake pedal latch when traveling at transport speeds and/or when a trailer with hydraulic or air-applied brakes is attached to the machine. Failure to comply could result in death or serious injury.

W0375A

NOTICE: *The red warning indicator **(5)** activates to indicate low service brake fluid level. Before moving the tractor, make sure that the warning indicator is off.*

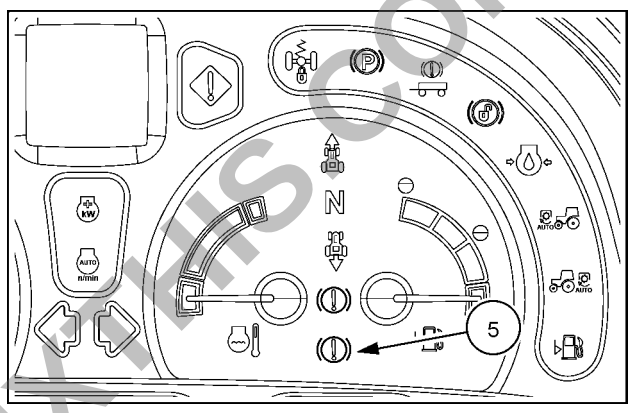

SVIL17TR00771AA 1

NOTICE: *to use the hydraulic trailer braking system correctly, follow the instructions below. In addition to the correct operation of the braking system, these instructions will also help to avoid hazardous situations, which may cause injuries to persons or damage to property.*

NOTE: *for safety reasons, when the brake pedals are lightly pressed, the trailer braking system activates the trailer brakes before the tractor brakes.*

NOTE: *When travelling on the road and towing trailers with hydraulic or pneumatic brakes, always join the brake pedals **(2)** together using the coupling pin **(1)**, as shown in the figure.*

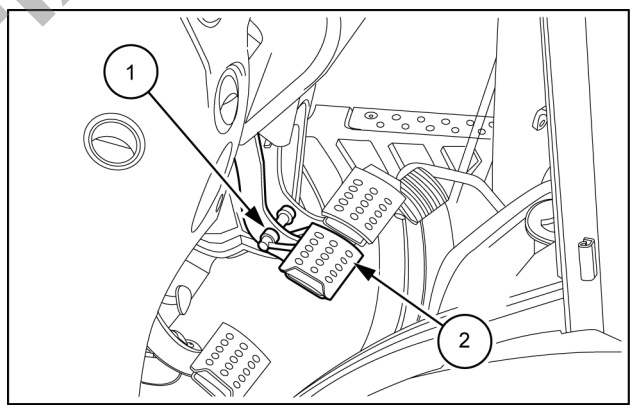

DCUTLNEIT072S6A 2

Connecting the trailer to the tractor

1. Connect the trailer to the tractor tow hook.
2. Apply the hand brake of the tractor and switch off the engine.
3. If the trailer is equipped with two lines, connect these to connectors **(1)** and **(2)** on the tractor's dual-line braking system.
4. If the trailer is equipped with a single line, connect this to connector **(2)** on the tractor's braking system.

   NOTICE: *Always check that the connection is correct.*
5. Connect the electrical plug of the trailer to the socket **(3)** to power the trailer brake lights and turn indicators.
6. If the trailer is equipped with an electrical connection which complies with the **ISO 7638-2** standard, connect the corresponding trailer pin to the socket **(4)**.

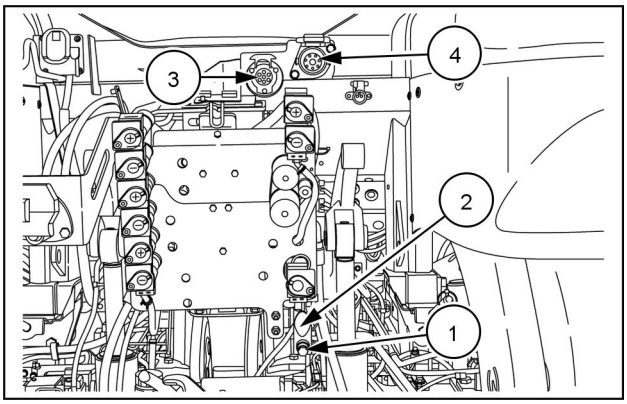

MOIL18TR02232AA 3

Download full manual at youfixthis.com

Reconfigurable inputs for ISO Bus function

With the optional ISO Bus Class 2 or 3 function fitted on the tractor and a ISO Bus Class 2 or 3 compatible implement connected to the tractor it is possible to assign tractor controls on the armrest to specific implement functions. Press the ISO Bus icon **(1)** on the entry screen.

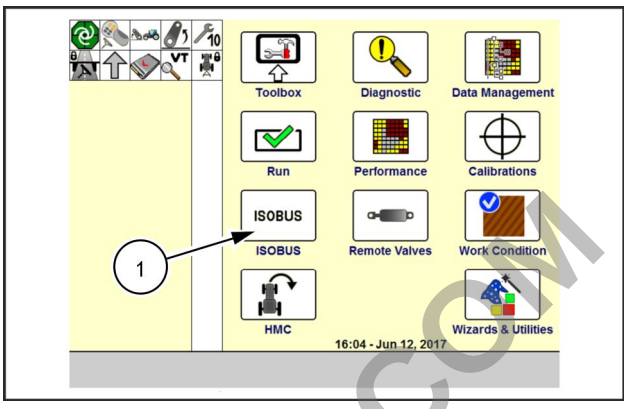

SVIL17TR01285AA 1

Press the tractor icon **(2)** to enter the auxiliary inputs control assignment screen.

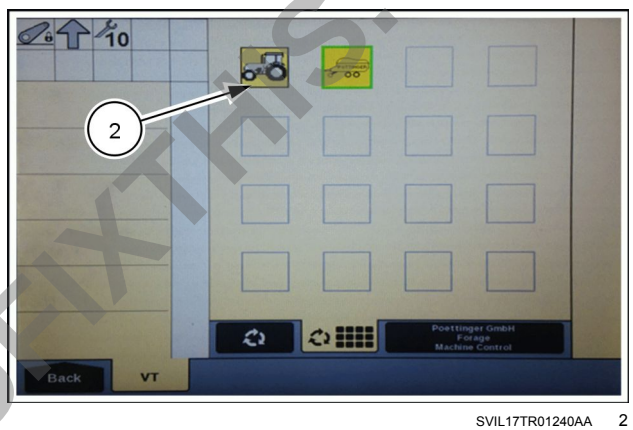

SVIL17TR01240AA 2

Enabling the ISO Bus function assignment

Press the 'ON' icon **(1)** to enable the assignment.

NOTICE: *Carefully check which tractor control you assign to ISO Bus functions. E.g. it is not recommended to assign the 'raise/lower switch' for the EDC to an ISO Bus function when the implement is fitted to the three-point hitch in order to avoid unexpected movement.*

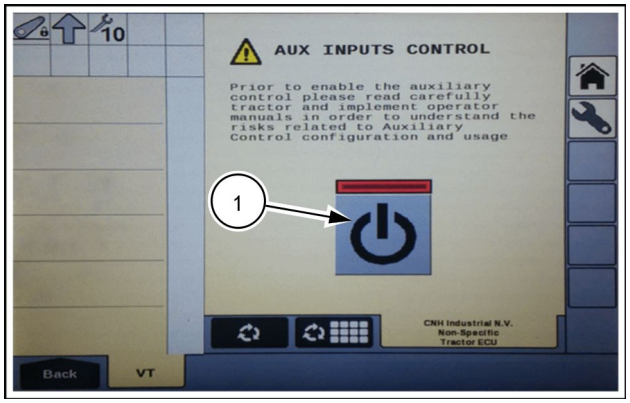

SVIL17TR01241AA 3

The screen shows the Multifunctionhandle (MFH) with all switches, which can be assigned to control a specific ISO Bus function. To see the switches located on the joystick or the EHR levers, press the appropriate icon **(2)**.

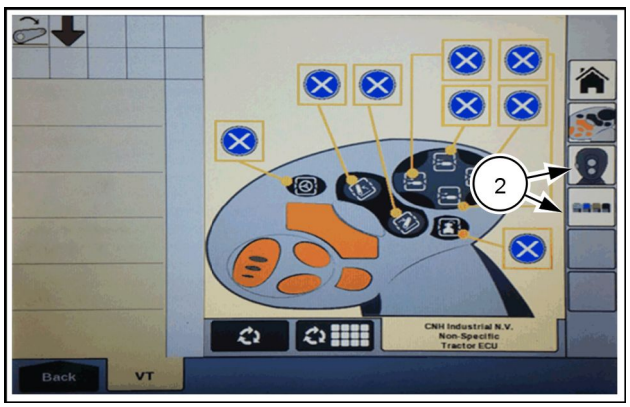

SVIL17TR01313AA 4

Download full manual at youfixthis.com

Check the transmission oil cooler pipe couplings

The transmission oil cooler delivery and return pipes, below and above the cooler radiator have quick release connections **(1)** fitted. Make sure these are sealed correctly and there are no signs of oil leaks.

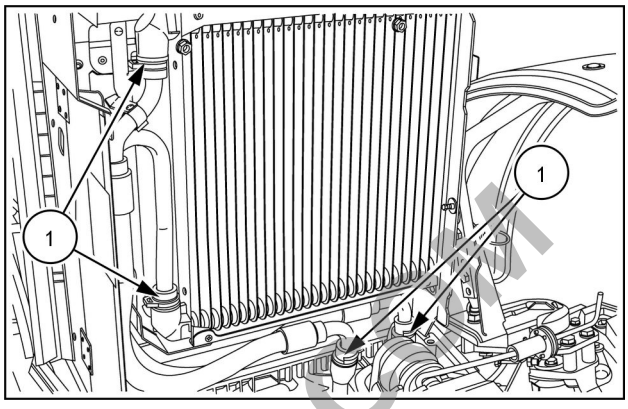

MOIL18TR02235AA 1

PREVIEW - YOUFIXTHIS.COM

Download full manual at youfixthis.com

Protecting the electronic and electrical systems during battery charging or welding

Precautions

To avoid damage to the electronic/ electrical systems, always observe the following:

1. Never make or break any of the charging circuit connections, including the battery connections, when the engine is running.
2. Never short any of the charging components to earth.
3. Do not use a slave battery of higher than **12 V** nominal voltage.
4. Always observe correct polarity when installing the batteries or using a slave battery to jump start the engine. Follow the instructions in the operator's manual when jump starting the tractor. Connect positive to positive and negative to negative.
5. Always disconnect the earth cable from the batteries before carrying out arc welding on the tractor or on any implement attached to the tractor.
6. Position the welder earth cable clamp as close to the welding area as possible.
7. If welding is to be carried out in close proximity to a computer module, then the module should be removed from the tractor. It is recommended that this procedure be carried out by an authorised dealer.
8. Never allow welding cables to lay on, near or across any electrical wiring or electronic component while welding is in progress.
9. Always disconnect the negative cable from the batteries when charging the batteries in the tractor with a battery charger.

⚠ WARNING

Battery acid causes burns. Batteries contain sulfuric acid.
Avoid contact with skin, eyes or clothing. Antidote (external): Flush with water. Antidote (eyes): flush with water for 15 minutes and seek medical attention immediately. Antidote (internal): Drink large quantities of water or milk. Do not induce vomiting. Seek medical attention immediately.
Failure to comply could result in death or serious injury.

W0111A

NOTICE: *Failure to disconnect the two earth cable connections at the battery prior to charging the batteries or welding on the tractor or attached implement will result in damage to the electronic and electrical systems.*

PREVIEW - YOUFIXTHIS.COM

Download full manual at youfixthis.com

PREVIEW ONLY

You're viewing 25 of 640 pages

The full manual includes:

- All 640 pages, complete
- Searchable PDF (find any keyword)
- No watermarks
- Instant download
- Print-ready quality

GET FULL MANUAL NOW

New Holland T5.110, T5.120, T5.130, T5.140, T5.110 AutoCommand, T5.120 AutoCommand, T5.130 AutoCommand, T5.140 AutoCommand Operator Manual



Scan or click anywhere
youfixthis.com

Click anywhere on this page to get the full manual