OPERATION 45
FUSES AND RELAYS

The relays and fuses are located together in the lower right hand front console just above floor level behind a panel on the front side.

To check or change the relays or fuses, remove the two screws, 1, securing the panel to the console, pull it outwards then slide it to the left to remove the two tongues, 2, on the right hand side. The fuses and relays are shown diagrammatically in Figures 145 and 146. In addition to the main fuses there are additional 'maxi' fuses which are provided to protect the main fuses and electrical circuit shown on Figure 147.

There is provision for 62 fuses although they may not all be fitted to your tractor. In addition, certain items of equipment may not be installed on your tractor. However, the fuses for these features are still fitted and may be used as spares.

NOTICE: *Do not replace a blown fuse with another of a different rating.*

The fuses are numbered and color-coded. Their position and ratings are shown in the charts on the following pages.

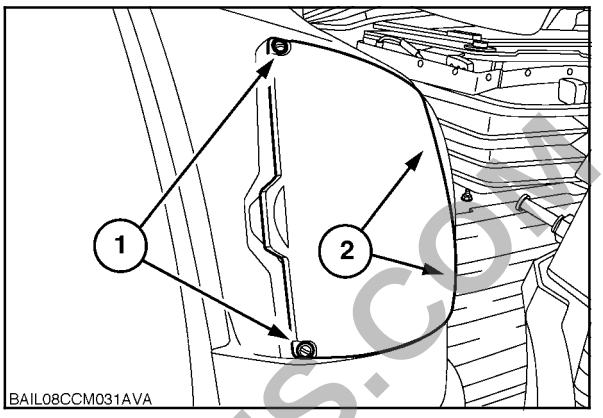

142

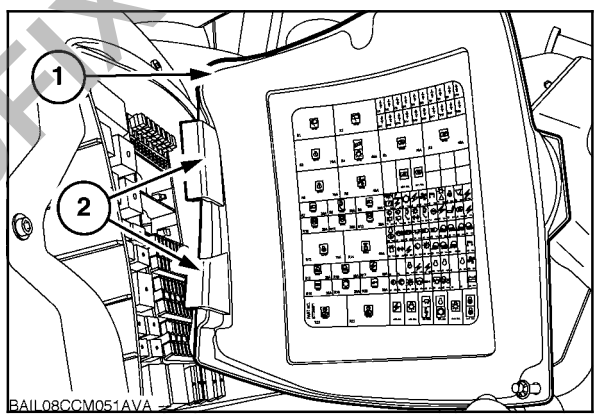

143

PREVIEW - YOUFIXTHIS.COM

Download full manual at youfixthis.com

FAULT CODES AND SYMBOLS

DMD	LAMP	FAULT CODE	AREA of FAULT	
	-	1---	Electronic draft control.	
	-	2---	Transmission.	
	-	3---	Engine.	
	-	4---	Rear electronic remote valves.	
	-	5---	Rear PTO system.	
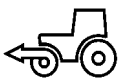	-	6---	Front wheel drive.	**ACTION** The system fault symbols relate to an operational fault in one or more of the tractors main components, either electrical, mechanical or hydraulic. The appearance of a fault symbol may be accompanied by a four or five digit fault code. Consult your authorized dealer.
	-	7---	Rear differential lock.	
	-	8---	Front PTO system.	
	-	9---	Front 3-point hitch.	
	-	10---	Front suspension.	
	-	12---	Electronic park lock	
	-	15---	Fast Steer system.	
	-	16---	Cab auto temperature control	
	-	18---	Armrest controller	
	-	19---	Selective Catalytic Reduction (SCR)	

PREVIEW - YOUFIXTHIS.COM

Download full manual at youfixthis.com

ENGINE

PROBLEM	POSSIBLE CAUSE	CORRECTION
Engine will not start or is difficult to start	Incorrect starting procedure.	Review starting procedure.
	Low or no fuel.	Check fuel level.
	Air in fuel lines.	Bleed fuel system.
	Low ambient temperature.	Use cold starting aid.
	Contaminated fuel system.	Clean and bleed fuel system.
	Clogged fuel filter(s).	Replace fuel filter element(s).
	Malfunctioning fuel pump or injectors.	See your authorized dealer.
	Malfunctioning fuel solenoid or solenoid relay.	See your authorized dealer.
	Incorrect engine oil viscosity.	Use correct viscosity oil.
	Incorrect fuel for operating temperature.	Use correct type fuel for temperature conditions.
	Slow starter speed.	See slow starter speed in Electrical.
Engine runs roughly and/or stalls	Clogged fuel filter(s).	Replace fuel filter element(s).
	Contaminated fuel system.	Clean and bleed fuel system.
	Fuel solenoid incorrectly adjusted.	See your authorized dealer.
	Fuel cap vent blocked.	Wash cap in clean fuel oil.

PREVIEW - YOUFIXTHIS.COM

Download full manual at youfixthis.com

GENERAL DIMENSIONS - ALL MODELS

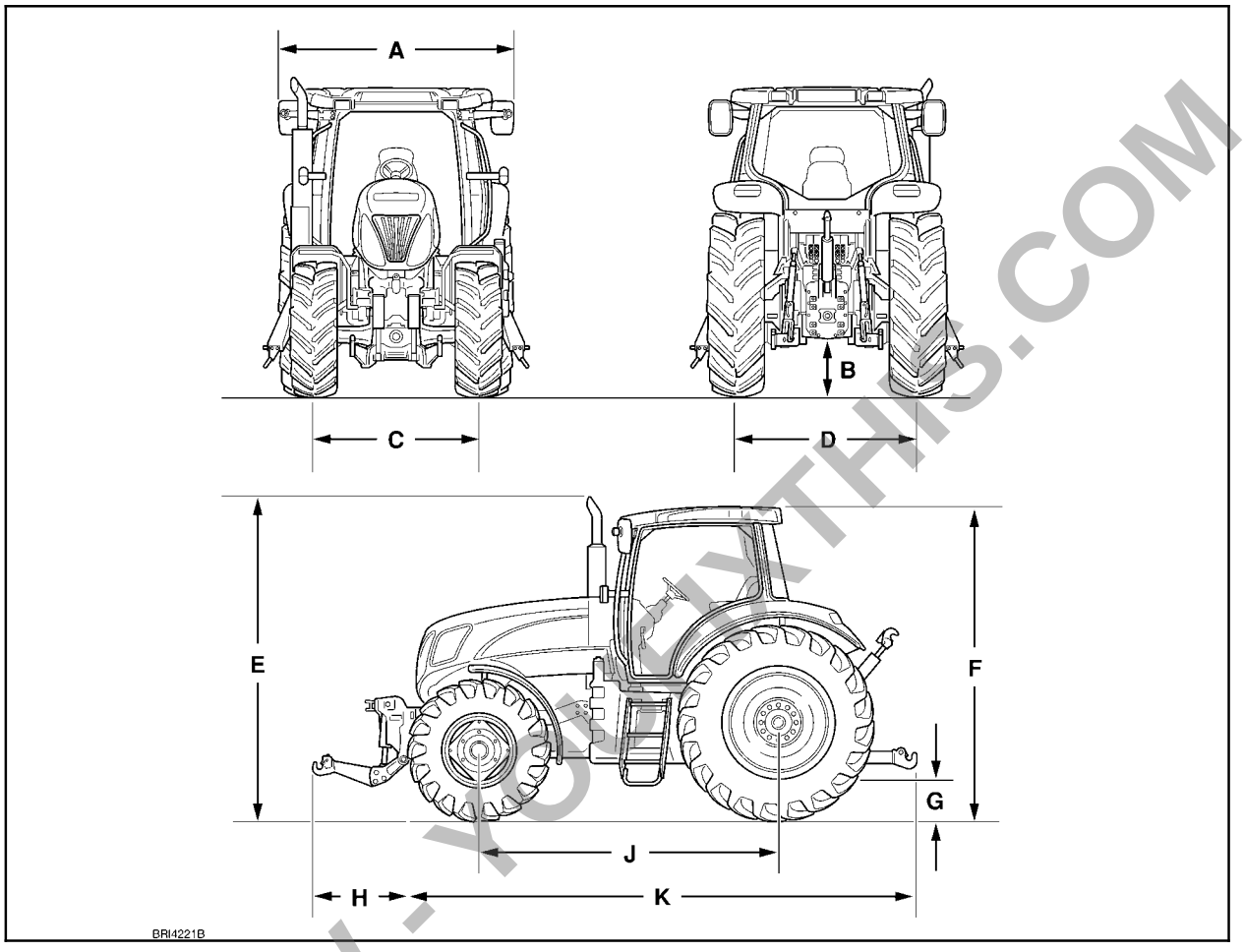

NOTICE: *The following dimensions are based on* ***standard*** *tractors fitted with tire sizes as shown. Allowance must be made for tires of larger or smaller dimensions.*

T7.220, T7.235, T7.250, T7.260 and T7.270

FWD
(Standard, Suspension and SuperSteer Axles)

The following dimensions are based on tractors with tire sizes shown:	Front	480/70R30
	Rear	580/70R42

A. Width across rear fenders

Narrow standard fenders	2158 mm (84.9 in)
Wide fenders	2334 mm (91.8 in)
Wide fenders + 75 mm extensions	2484 mm (97.7 in)
Wide fenders + 174 mm extensions	2682 mm (105.5 in)

PREVIEW - YOUFIXTHIS.COM

Download full manual at youfixthis.com

TRACTOR GROUND SPEED DISPLAY

The lower left-hand LCD provides a permanent display of ground speed, 1, in km/h or mph dependent upon the country in which the tractor is to be used. If required, the display may be changed to read an alternate ground speed unit from that set at the factory.

NOTICE: *If the tractor rear tire size is changed, the ground speed display may require re-calibrating to suit the radius of the new tire.*

NOTICE: *Illustration shows all displays activated.*

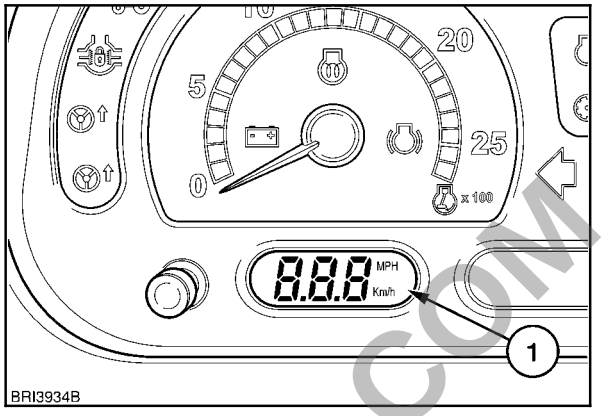

94

Changing the Ground Speed Units

- With the key-start in the ON position, depress and hold the Menu/Enter key, 2, for 3 seconds. The DMD will read **SETUP MENU**, this will change to **CAL** after 2 seconds.
- Using the Menu Up key, 1, scroll through the menu until the **km/h mph** screen appears.
- Momentarily depress the Menu/Enter key, 2, and, using the Menu Up/Down keys, select the required speed reading. To store the setting and return to the main menu depress the Menu/Enter key again. Depress the Exit/Cancel key to return to the original display.

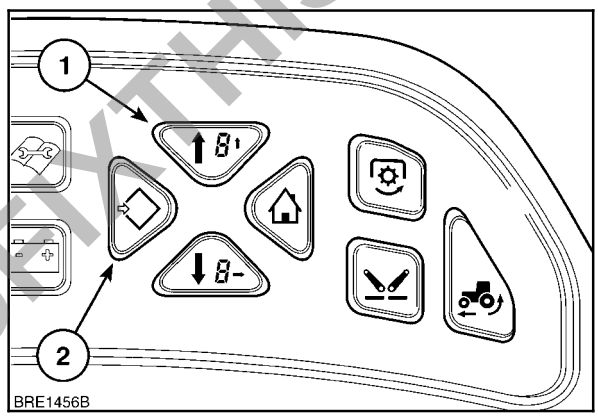

95

Selecting the appropriate unit will automatically set the unit for both instrument panel and color display (where fitted).

Calibrating the Ground Speed Display

Should you wish to install alternative rear tire equipment that would provide a radius difference of more than 13 mm (0.5 in), then the electronic control module should be re-calibrated to display an accurate ground speed figure. To re-calibrate use one of the following methods:

NOTICE: *If your tractor is equipped with the optional slip control feature, then the ground speed displayed is a true speed as sensed by a radar unit, calibration is therefore* ***not*** *required.*

- Ensure that the tire pressures are correct for the load being carried. (See Tire Load/Inflation tables in Section 3 of this manual).
- Select a stretch of dry, firm, level ground (preferably concrete) and carefully measure out a distance of exactly 100.0 m (328 feet). Mark the start and finish of this measured distance with a bold chalk line.

PREVIEW - YOUFIXTHIS.COM

Download full manual at youfixthis.com

LUBRICATION AND MAINTENANCE CHART

Service Interval	Operation No.	Maintenance Requirement	Check	Clean	Lube	Change	Adjust	Drain	Page No.
When a warning symbol appears	1	Engine air cleaner outer element	X			X			4-16
	2	Fuel filter/water separator	X					X	4-17
Every 10 hours or daily	3	Engine coolant level	X				X		4-18
	4	Engine oil level	X				X		4-19
	5	Windscreen washer reservoir	X				X		4-19
Every 50 hours	6	Radiator, intercooler, oil cooler, air conditioner condenser cores and SCR cover	X	X					4-20
	7	Cab air filters		X					4-22
	8	All grease fittings			X				4-24
	9	Front and rear wheel nut torque	X				X		4-29
	10	Tire pressures and condition	X				X		4-29
Every 300 hours	11	Battery electrolyte level (tropical climates)	X	X			X		4-30
	12	Poly V-belt	X						4-31
	13	Transmission/rear axle/hydraulic oil level	X				X		4-31
	14	Parking brake and electronic park lock (EPL) (where fitted)	X				X		4-32
	15	Front P.T.O. gearbox oil level	X				X		4-31
Every 600 hours	*16	Engine oil and filter				X			4-34
	17	Charge pump and vane pump (where fitted) oil filters				X			4-36
	18	Engine air cleaner outer element				X			4-37
	19	Engine air intake connections	X						4-38
	20	Transmission oil cooler pipe quick release couplings				X			4-39
	21	Pre-fuel and secondary fuel filter elements				X			4-40
	22	FWD front axle and hub oil levels	X				X		4-40
	23	Front P.T.O. gearbox oil and filter		X		X			4-41
	24	DEF/AdBlue® In Line Filter		X					4-41
Every 1200 hours or annually	25	Cab air filters				X			4-42
	26	Main filter cartridge, charge pump and vane pump (where fitted) oil filters				X			4-43
	27	Transmission/rear axle/hydraulic oil				X			4-45
	28	FWD axle differential oil				X			4-47
	29	FWD axle hub oil				X			4-48
	30	Battery electrolyte level (temperate climates)	X	X			X		4-48

***** Oil change interval will be reduced if fuel has a high sulphur content or if the tractor is operated in extremely cold temperatures.

PREVIEW - YOUFIXTHIS.COM

Download full manual at youfixthis.com

OPERATING THE TRACTOR

1. Apply the parking brake, place the PTO control in the 'OFF' position, the lift control lever in the down position, the remote control valve levers in the neutral position and the transmission levers in neutral before starting the tractor.
2. Do not start the engine or operate controls (other than externally located hydraulic lift or PTO switches, if fitted) while standing beside the tractor. Always sit in the tractor seat when starting the engine or operating the controls.
3. Do not bypass the transmission and PTO neutral start switches. Consult your authorized dealer if your neutral start controls malfunction. Use jump leads only in the recommended manner. Improper use can result in a tractor runaway.
4. Avoid accidental contact with the gear shift levers while the engine is running. Unexpected tractor movement can result from such contact.
5. Do not get off the tractor while it is in motion.
6. If the power steering or engine ceases operating, stop the tractor immediately as the tractor will be more difficult to control.
7. Before leaving the tractor, park the tractor on level ground, apply the parking brake, lower attached implements to the ground, disengage the PTO and stop the engine.

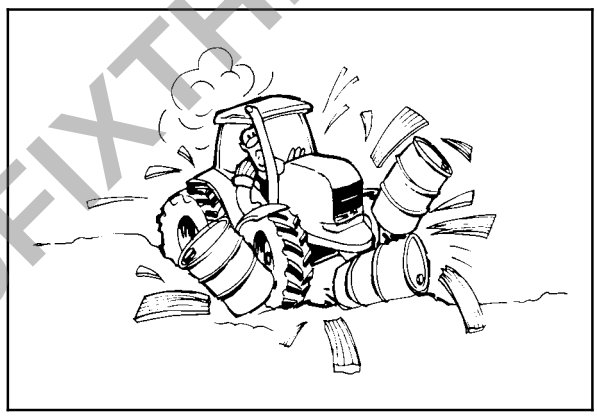

14

8. Do not park the tractor on a steep incline.
9. The cab is designed to provide the minimum noise level at the operator's ears and meets or exceeds applicable standards in this respect. However, noise (sound pressure level) in the workplace can exceed 85 dB(A) when working between buildings or in confined spaces, with cab windows open. Therefore, it is recommended that operators wear suitable ear protection when operating in high noise level conditions.

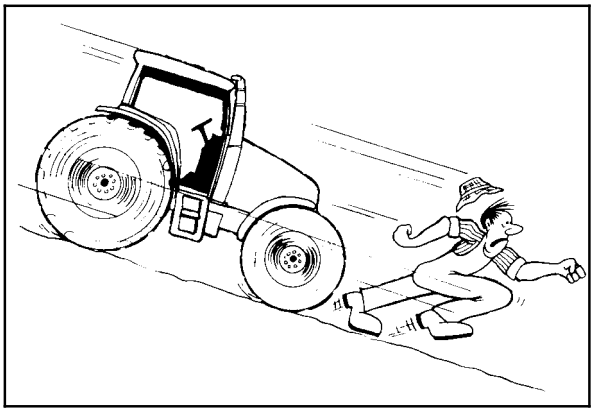

15

PREVIEW - YOUFIXTHIS.COM

Download full manual at youfixthis.com

INTEGRATED CONTROL PANEL

POWER COMMAND TRANSMISSION

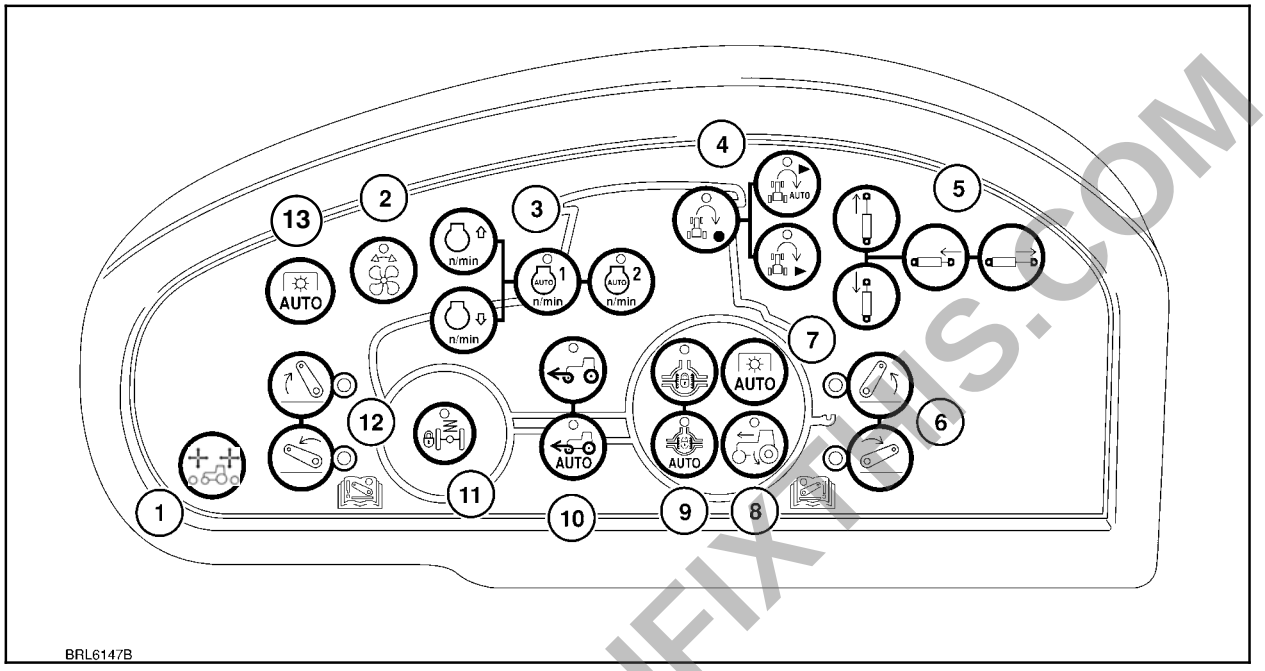

1

Your tractor is equipped with a number of electronic control switches located on the right-hand side of the cab. Depending on the options fitted to your tractor, some of these switches may have more than one function. A full explanation of individual switch operation can be found in the relevant pages of this manual.

1. Front/rear joystick control selector
2. Reversible engine fan control
3. Engine speed management settings
4. CHM Record/Auto/Manual select
5. Hydraulic top link/lift rod controls
6. Rear 3-point hitch EDC operation
7. Rear Auto PTO control
8. Wheel slip engagement
9. Rear axle differential lock, Auto/Manual engagement
10. FWD Auto or Manual engagement
11. Front axle suspension lock
12. Front 3-point hitch operation
13. Rear Auto PTO control

PREVIEW - YOUFIXTHIS.COM

Download full manual at youfixthis.com

FRONT P.T.O. AND 3-POINT HITCH (where fitted)

Tractors with four wheel drive may be equipped with an engine-driven P.T.O. and front 3-point hitch. These features are available as a factory installed option or dealer installed accessory.

The optional front hitch, consists of an adjustable top link (1) and a pair of folding lower links (2). The top link and the lower links have open claw ends that permit rapid coupling and uncoupling of implements.

The claws are equipped with self-locking latches to ensure positive retention of the 3-point hitch to the implement.

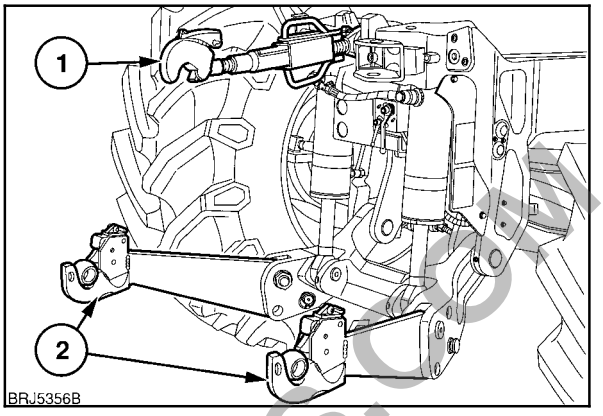

38

The front hitch can be operated by a rear or mid-mount remote valve (where fitted). The height of the hitch (1) can be shown in the Central Display as a percentage (%) ranging from 0 (fully lowered) to 100 (full raise).

A rotary control on the armrest console can be used to set a limit on the operating height of the hitch where necessary.

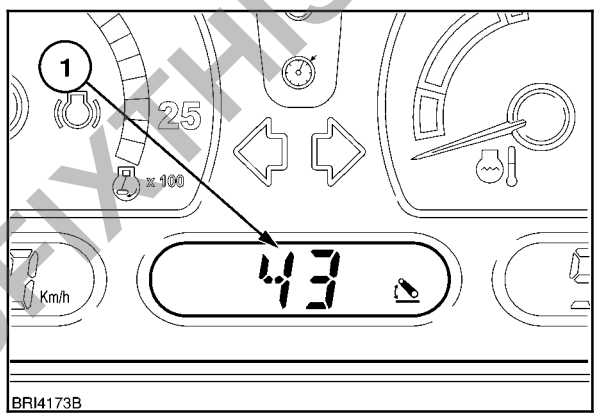

39

Three ball-bushings are supplied for installation on the implement, if required. The ball-bushing with projecting lips (1) should be installed on the implement upper hitch pin.

The two plain ball-bushings (2) with their additional guides (3) should be installed on the implement lower hitch pins.

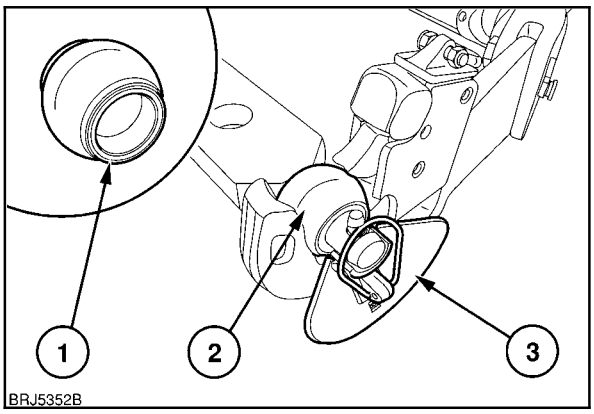

40

PREVIEW - YOUFIXTHIS.COM
Download full manual at youfixthis.com

PRESSURE WASHING THE TRACTOR

Your tractor is fitted with a number of Electronic Control Units (ECU's) that are linked to various sensors throughout the vehicle. These units electronically control many tractor functions including engine, transmission, PTO and hydraulic systems.

It is very important therefore, when cleaning the tractor body or chassis with a high pressure water jet, that care should be taken not to aim the jet directly at any electrical component, wiring harness or connector.

TOWING THE TRACTOR

NOTICE: *The tractor should only be towed a short distance, such as out of a building. Do not tow on roadways or as a method of transport.*

If it is necessary to tow the tractor, all **transmission controls must** be moved to the **neutral position before** stopping the engine otherwise damage to transmission components may occur during towing. If creeper gears (reduction gear set) are fitted, then the selector control must be in the **off** position.

Use a strong chain when towing the tractor. Tow the tractor from the rear using only the drawbar, rear tow hitch or the three-point hitch. Tow the tractor from the front using the tow pin in the front weights or front support. Have an operator steer and brake the tractor.

To avoid damaging the transmission or other components that turn but are not lubricated during towing, observe the following:

- Only tow a short distance
- Keep speed below 8 km/h (5 mph)
- If possible, run the engine to provide lubrication and power steering.

NOTICE: *The brakes on your tractor are hydraulically power assisted. With the engine off, the brakes will still function but with a higher pedal effort.*

⚠ CAUTION ⚠

Do not tow the tractor faster than 8 km/h (5 mph). The steering is much slower and steering wheel effort is much greater without the engine running.

⚠ WARNING ⚠

Do not use cables or rope to tow the tractor. If the cable or rope breaks or slips, it may whip with sufficient force to cause serious injury. When using a chain, attach the chain with the hook open side facing up. If the hook slips, it will drop down instead of flying up.

NOTICE: *Four wheel drive will be engaged if the engine is not running, regardless of the position of the FWD activation switch.*

CARRYING THE TRACTOR ON A TRANSPORTER

Transport the tractor with all four wheels on a flat bed trailer or truck. Securely chain the tractor to the transporter.

NOTICE: *Do not chain around the four wheel drive shaft, steering cylinders, front wheel drive axle or other components that could be damaged by contacting the chain or by heavy loading.*

Use the drawbar or drawbar hanger for a rear tie down point.

NOTICE: *Cover the silencer outlet so that the wind does not spin the turbocharger and damage the bearings. Turbocharger turbine freewheeling (turning without engine running) must be avoided since lubrication will not be provided to the turbocharger bearings.*

PREVIEW - YOUFIXTHIS.COM

Download full manual at youfixthis.com

Relay Descriptions 1-22

Relay	Function
K1	Front Windscreen Wiper Module
K2	Rear Window Wiper Module
K3	Ignition Relay
K4	Side Lamps and Lighting
K5	Starter
K6	Blower Motor
K7	Dip Beam Headlights
K8	Stop Lamps
K9	Main Beam Headlights
K10	Hydraulic Trailer Brake Power Supply
K11	Electronic Park Brake
K12	Pneunatic Trailer Brake Power Supply
K13	Not Used
K14	Get U Home
K15	Worklamp Hood
K16	Worklamp C–Pillar
K17	Power Supply Ign. ECU's
K18	Electronic Battery Isolator
K19	Air Conditioning
K20	Power Supply Electro Hydraulic Remotes
K21	Battery Isolator 4 minute Timer Power Supply Electronics
K22	Heated Mirror Timer
K44	Front Heated Screen
K45	Rear Heated Screen

Selective Catalytic Reduction (SCR) System Relay

Located behind the right hand step the Relay is for the SCR system (Ignition ON).

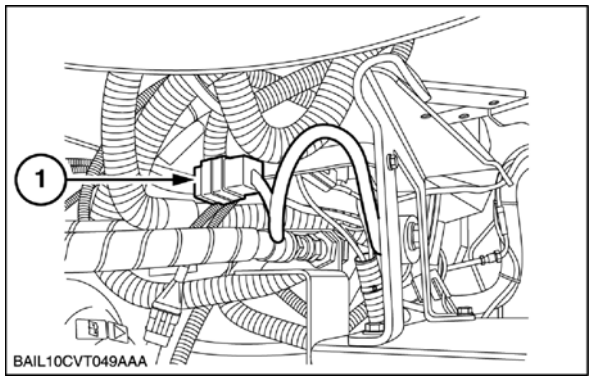

144

PREVIEW - YOUFIXTHIS.COM

Download full manual at youfixthis.com

ADVISORY DISPLAYS and INFORMATION (continued)

DMD	PANEL LAMP	WARNING LAMP	ALARM	CAUSE	ACTION
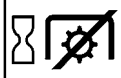	–	Amber flashing	Non critical	Incorrect use of PTO control – Timed Out.	Do not engage PTO until DMD symbol clears.
	–	Amber flashing	Non critical	Engine speed too low to allow PTO engagement.	Increase engine speed and re-engage PTO drive.
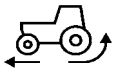	–	Amber flashing/ continuous	Non critical	Wheel slip limit exceeded.	Reduce tractor or implement draft load.
	–	–	None	Instrument display backlighting.	Adjust backlighting to required level.
	–	Amber flashing/ continuous	Non critical	Front remote valve not functioning due to insufficient oil flow. Lever or joystick not in neutral at key-on.	Reduce oil flow requirements to other services. Move lever or joystick control to neutral.
	–	Amber flashing/ continuous	Non critical	Rear remote valve not functioning due to insufficient oil flow. Lever or joystick not in neutral at key-on.	Reduce oil flow requirements to other services. Move lever or joystick control to neutral.

PREVIEW - YOUFIXTHIS.COM

Download full manual at youfixthis.com

Engine (Continued)

PROBLEM	POSSIBLE CAUSE	CORRECTION
Engine lacks power	Engine overloaded.	Shift to lower gear, reduce draft load or ballast carried.
	Air cleaner restricted.	Service air cleaner.
	Low engine operating temperature.	Check thermostats.
	Engine overheats.	See Engine overheats.
	Clogged fuel filter(s).	Replace fuel filter element(s).
	Incorrect fuel.	Use correct type fuel.
	Malfunctioning fuel injectors.	See your authorized dealer.
	Malfunctioning fuel injection pump.	See your authorized dealer.
	Maximum 'no-load' speed set too low.	See your authorized dealer.
	Leaking air intake boost pipes or exhaust manifold.	Check and rectify or see your authorized dealer.
	Turbocharger malfunctioning.	See your authorized dealer.
	Implement incorrectly adjusted.	See implement Operator's Manual.
Engine knocks	Fuel injection pump timing.	See your authorized dealer.
	Low engine oil level.	Add oil, as required.
	Low engine oil pressure.	See your authorized dealer.
	Low engine operating temperature.	Check thermostats.
	Engine overheats.	See Engine overheats.
Engine overheats	Low engine oil level.	Add oil, as required.
	Low engine coolant level.	Fill coolant recovery tank. Check cooling system for leaks.
	Defective thermostat(s).	Check thermostat(s).
	Dirty/blocked radiator core.	Clean.
	Excessive engine overload.	Shift to lower gear, reduce draft load or ballast carried.

PREVIEW - YOUFIXTHIS.COM

Download full manual at youfixthis.com

GENERAL DIMENSIONS	T7.220, T7.235, T7.250, T7.260 and T7.270 FWD (Standard, Suspension and SuperSteer Axles)
B. Maximum ground clearance below front axle	613 mm (24.1 in)
C. Front track setting	
Adjustable rims	1560 - 2258 mm (61.4 - 88.8 in)
Fixed rims	1840 - 1980 mm (72.4 - 77.9 in)
D. Rear track setting*	
- with 98 inch bar axle	1870 - 2168 mm (73.6 - 85.4 in)
- with 112 inch bar axle	1870 - 2517 mm (73.6 - 99.1 in)
- with 119 inch bar axle	1870 - 2698 mm (73.6 - 106.2 in)
E. Height to top of exhaust	3164 mm (124.5 in)
F. Height to top of cab	3090 mm (121.6 in)
G. **Ground clearance below drawbar	
Swinging drawbars	398 - 523 mm (15.6 - 20.5 in)
H. Front hitch projection	
Links horizontal	716 mm (28.1 in)
Links in transport position	316 mm (12.4 in)

***Rear track settings calculated with steel wheels.

****Ground clearance below the swinging drawbar or tow hook will be dependent on type of drawbar and tyre size. The figures shown are for guidance only.

NOTICE: *If your tractor has tires of a different size then the above dimensions will vary due to the difference in the rolling radius and section width of the tires fitted.*

PREVIEW - YOUFIXTHIS.COM

Download full manual at youfixthis.com

Calibrating the Ground Speed Display

Should you wish to install alternative rear tire equipment that would provide a radius difference of more than 13 mm (0.5 in), then the electronic control module should be re-calibrated to display an accurate ground speed figure. To re-calibrate use one of the following methods:

NOTICE: *If your tractor is equipped with the optional slip control feature, then the ground speed displayed is a true speed as sensed by a radar unit, calibration is therefore* ***not*** *required.*

- Ensure that the tire pressures are correct for the load being carried. (See Tire Load/Inflation tables in Section 3 of this manual).
- Select a stretch of dry, firm, level ground (preferably concrete) and carefully measure out a distance of exactly 100.0 m (328 feet). Mark the start and finish of this measured distance with a bold chalk line.

Auto Calibration

- Select a stretch of dry, firm, level ground (preferably concrete) and carefully measure out a distance of exactly 100.0 m (328 feet). Mark the start and finish of this measured distance with a bold chalk line.
- With the the tractor stationary and the engine running, depress and hold the Menu/Enter key, 4. **SETUP_MENU** will appear in the DMD but this will change to the **Clock Menu.** Release the Menu/Enter key.
- Using the menu up/down keys, select **CAL**.
- With **CAL** displayed, depress the Menu/Enter key to select **CAL manual** then use the Menu Up key, 1, and scroll through the menu screen until **CAL auto** is displayed.

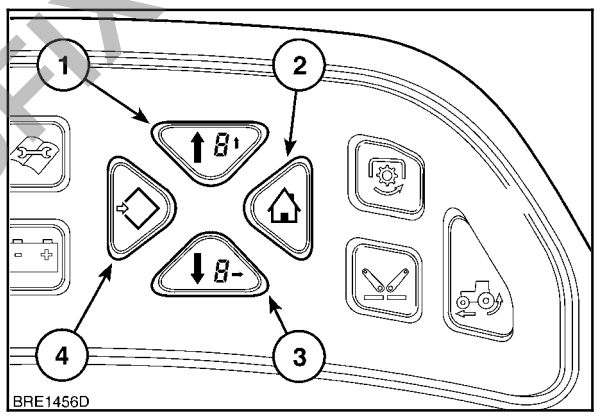

96

PREVIEW - YOUFIXTHIS.COM

Download full manual at youfixthis.com

LUBRICATION AND MAINTENANCE CHART (continued)

Service Interval	Operation No.	Maintenance Requirement	Check	Clean	Lube	Change	Adjust	Drain	Page No.
Every 1200 hours or two years	**31**	Engine coolant				**X**			4-51
	32	Engine air cleaner inner element				**X**			4-55
	33	Engine breather filter				**X**			4-56
Every 3600 hours / 2 years	**34**	Main DEF/AdBlue® Filter				**X**			4-57
Every 3 years	**35**	Air conditioning system	**X**	**X**		**X**			4-57
General maintenance	**36**	Reversible engine fan		**X**					4-58
	37	Fuel system pre-filter (where fitted)	**X**	**X**				**X**	4-58
	38	Priming the fuel injection system	**X**				**X**		4-59
	39	Transmission calibration	**X**				**X**		4-59
	40	Brake pedal latching / unlatching	**X**				**X**		4-66
	41	Remote control valve drain bottle(s)	**X**						4-67
	42	Cab suspension adjustment (where fitted)	**X**				**X**		4-67
	43	Headlight and worklamp adjustment	**X**				**X**		4-68
	44	Bulb replacement				**X**			4-69
	45	Fuse replacement				**X**			4-74
	-	Cleaning the tractor	**X**	**X**					4-81
	-	Storing the tractor	**X**	**X**			**X**		4-83

PREVIEW - YOUFIXTHIS.COM

Download full manual at youfixthis.com

10. Do not run the tractor engine in an enclosed building without adequate ventilation. Exhaust fumes are toxic and can cause death.
11. Pull only from the pick-up hitch, swinging drawbar or the lower link drawbar in the lowered position. Use only a drawbar pin that locks in place. Pulling from the tractor rear axle or any point above the axle may cause the tractor to overturn.
12. Always select Position Control when attaching equipment and when transporting equipment. Be sure hydraulic couplers are properly mounted and will disconnect safely in case of accidental detachment of the implement.
13. If the front end of the tractor tends to rise when heavy implements are attached to the three-point hitch, install front end or front wheel weights. Do not operate the tractor with a light front end.
14. Engage the clutch slowly when driving out of a ditch, gully or up a steep hillside. Disengage the clutch promptly if the front wheels rise off the ground.
15. Ensure any attached equipment or accessories are correctly installed, are approved for use with the tractor, do not overload the tractor and are operated and maintained in accordance with the instructions issued by the equipment or accessory manufacturer.
16. Remember that your tractor, if abused or incorrectly used, can be dangerous and become a hazard both to the operator and to bystanders. Do not overload or operate with attached equipment which is unsafe, not designed for the particular task or is poorly maintained.
17. Do not leave equipment in the raised position when the vehicle is stopped or unattended.
18. Do not drive equipment near open fires.
19. Always wear a protective mask when working with toxic spray chemicals. Follow the directions on the chemical container.

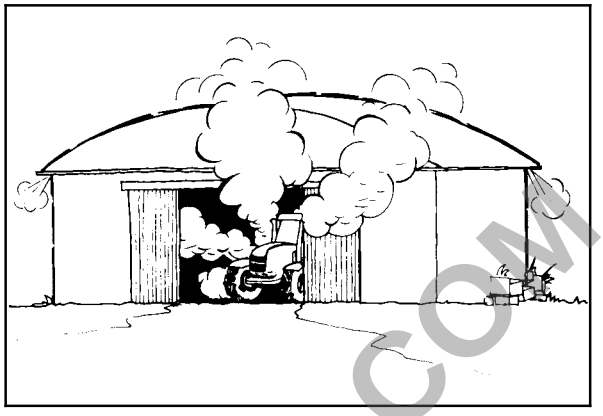

16

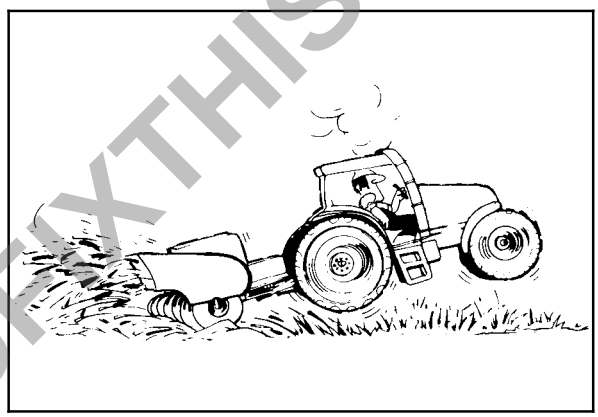

17

PREVIEW - YOUFIXTHIS.COM

Download full manual at youfixthis.com

AUTO COMMAND TRANSMISSION

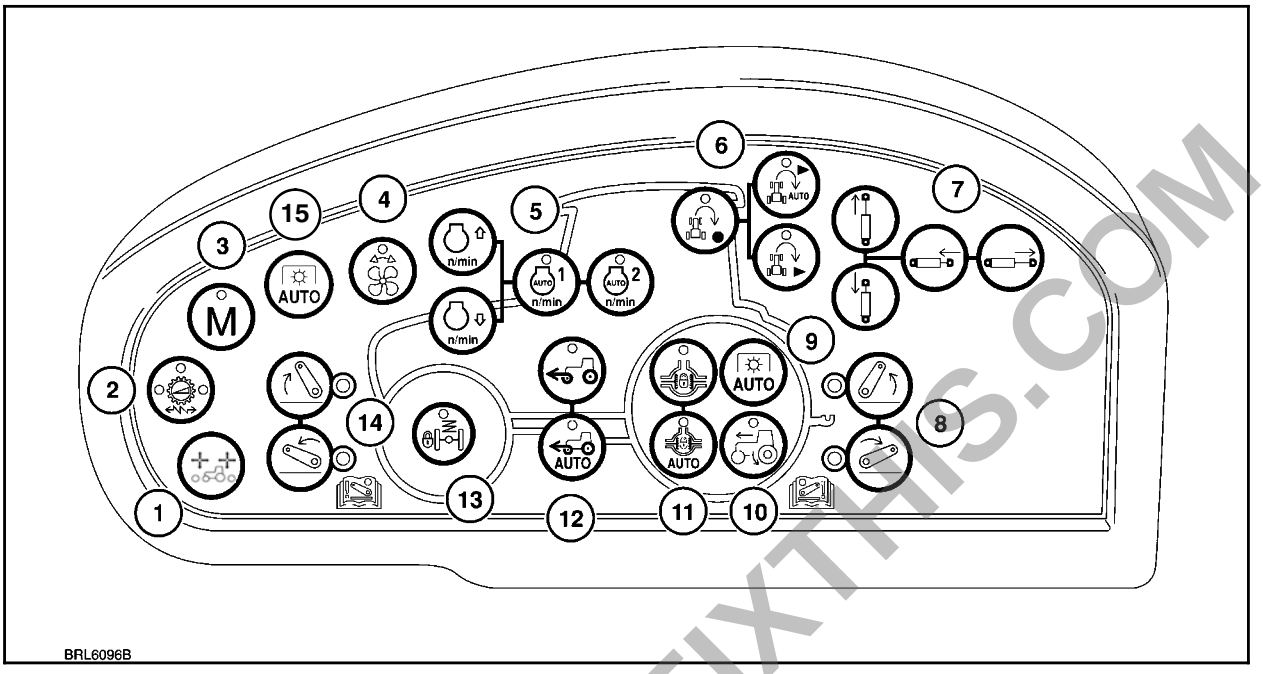

2

Your tractor is equipped with a number of electronic control switches located on the right-hand side of the cab. Depending on the options fitted to your tractor, some of these switches may have more than one function.

A full explanation of individual switch operation can be found in the relevant pages of this manual.

1. Front/rear joystick control selector
2. Auto Command acceleration rate control
3. Auto Command manual operation
4. Reversible engine fan control
5. Engine Speed Management settings
6. CHM Record/Auto/Manual select
7. Hydraulic top link/lift rod controls
8. Rear 3-point hitch EDC operation
9. Rear Auto PTO control
10. Wheel slip engagement
11. Rear axle differential lock, Auto/Manual engagement
12. FWD Auto or Manual engagement
13. Front axle suspension lock
14. Front 3-point hitch operation
15. Auto front PTO

PREVIEW - YOUFIXTHIS.COM

Download full manual at youfixthis.com

PREVIEW ONLY

You're viewing 18 of 468 pages

The full manual includes:

- All 468 pages, complete
- Searchable PDF (find any keyword)
- No watermarks
- Instant download
- Print-ready quality

GET FULL MANUAL NOW

New Holland T7.220, T7.235, T7.250, T7.260, T7.270 Operator Manual

Scan or click anywhere
youfixthis.com

Click anywhere on this page to get the full manual