TC29D, TC33D REPAIR MANUAL COMPLETE CONTENTS

SECTION 00 - GENERAL INFORMATION 2

SECTION 10 - ENGINE 3

SECTION 18 - CLUTCHES 7

SECTION 21 - GEAR TRANSMISSION 8

SECTION 25 - FWD AXLE 9

SECTION 27 - DIFFERENTIAL, REAR AXLE 11

SECTION 29 - HYDROSTATIC TRANSMISSION 11

SECTION 31 - POWER TAKE-OFF SYSTEMS 14

SECTION 33 - BRAKES 14

SECTION 35 - HYDRAULIC SYSTEM 15

SECTION 41 - STEERING SYSTEMS 16

SECTION 44 - WHEELS AND TIRES 17

SECTION 55 - ELECTRICAL SYSTEM 18

SECTION 90 - PLATFORM 20

The following pages are the collation of the contents pages from each section and chapter of the TC29D and TC33D Repair manual. Complete Repair part # 87036756

The sections used through out all New Holland product Repair manuals may not be used for each product. Each Repair manual will be made up of one or several books. Each book will be labeled as to which sections are in the overall Repair manual and which sections are in each book.

The sections listed above are the sections utilized for the TC29D and TC33D Tractors.

PREVIEW - YOUFIXTHIS.COM

Download full manual at youfixthis.com

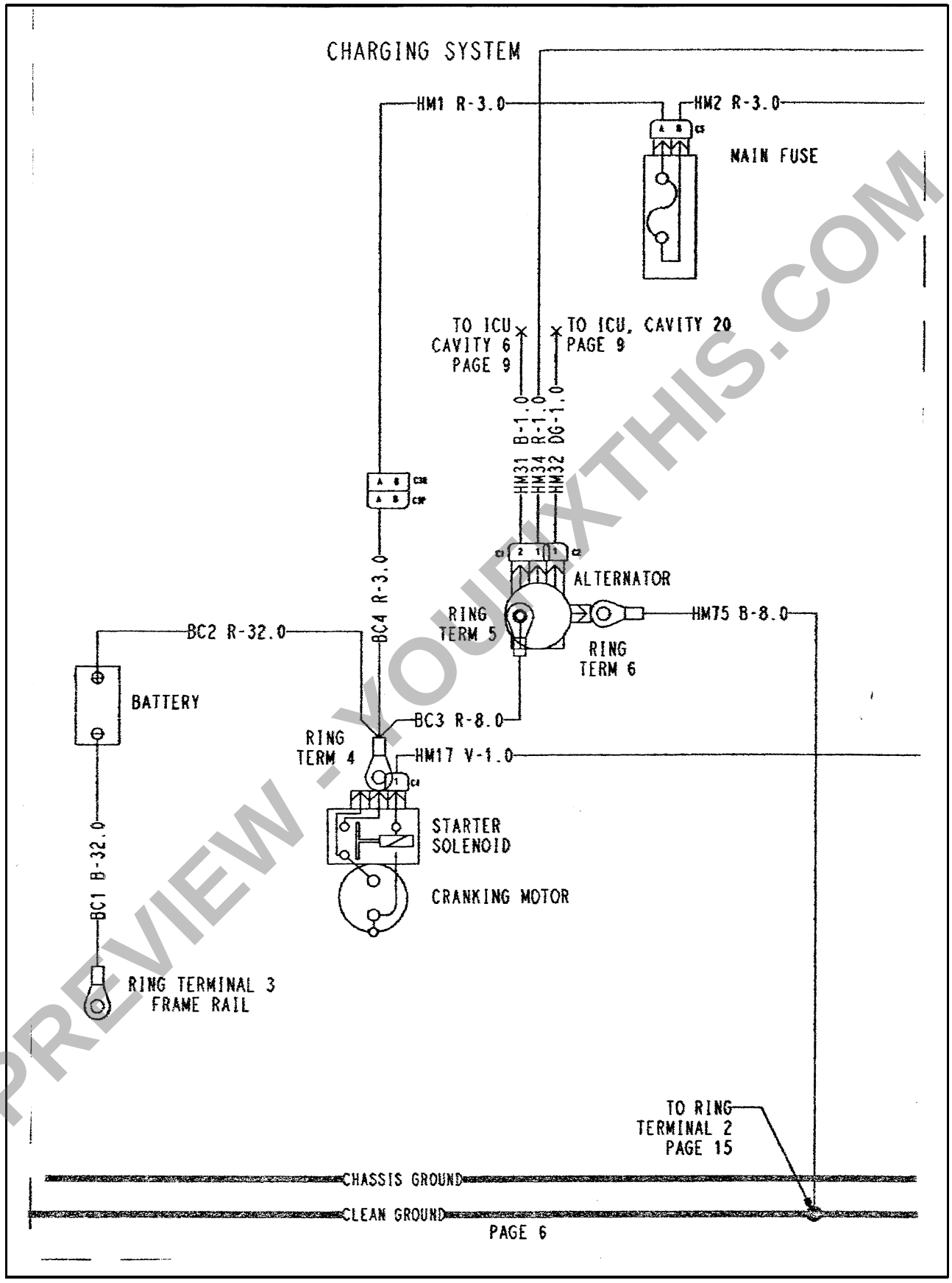

PREVIEW - YOUFIXTHIS.COM

99

Download full manual at youfixthis.com

Rear (Single-Spool) Remote Valve
The rear remote valves are equipped with self-centering springs so that the spools automatically return to neutral when the control handle is released following a raise or lowering operation.

Front (Double-Spool) Remote Valve (Figure 59)
The double-spool remote valve also contains a spring-loaded detent mechanism to provide a float position for loader operation. In float position, fluid is free to flow between piston and rod sides of the loader lift cylinder allowing the lift arms to float over uneven terrain.

The double-spool remote control valve contains check valves located in the valve spool passages. The check valves function to hold the loader lift and bucket cylinders in a fixed position while the valve is being initially operated to prevent dropping the load. In operation, the check valve is retained on its seat by spring force plus the back side pressure of fluid contained in the loader cylinder. During initial spool movement, pump-pressurized fluid fills the passage to the check valve, and the remaining pump fluid flows to the sump through the open center passage. With continued spool movement, the open center passage closes. Pump pressure increases on the force of the check valve, overcoming the backside pressure, and causes the check valve to open. Pump fluid flow then flows to the cylinder. This action prevents any backflow out of the cylinder and provides a smooth-lifting action of the loader.

NOTE: *Separate installation instructions are provided for the different remote valve kits.*

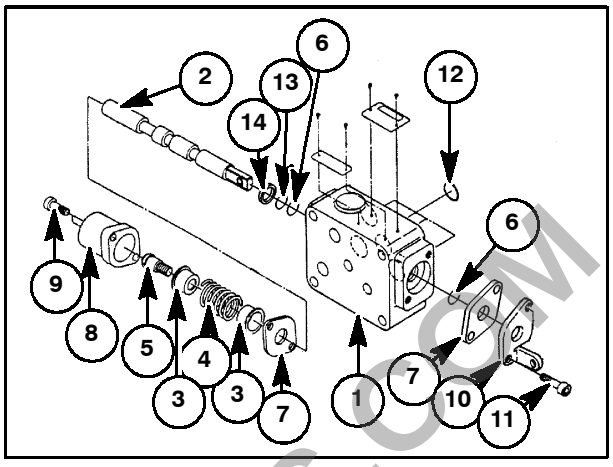

58

PREVIEW - YOUFIXTHIS.COM

Download full manual at youfixthis.com

SUPER STEER AXLE COMPONENTS

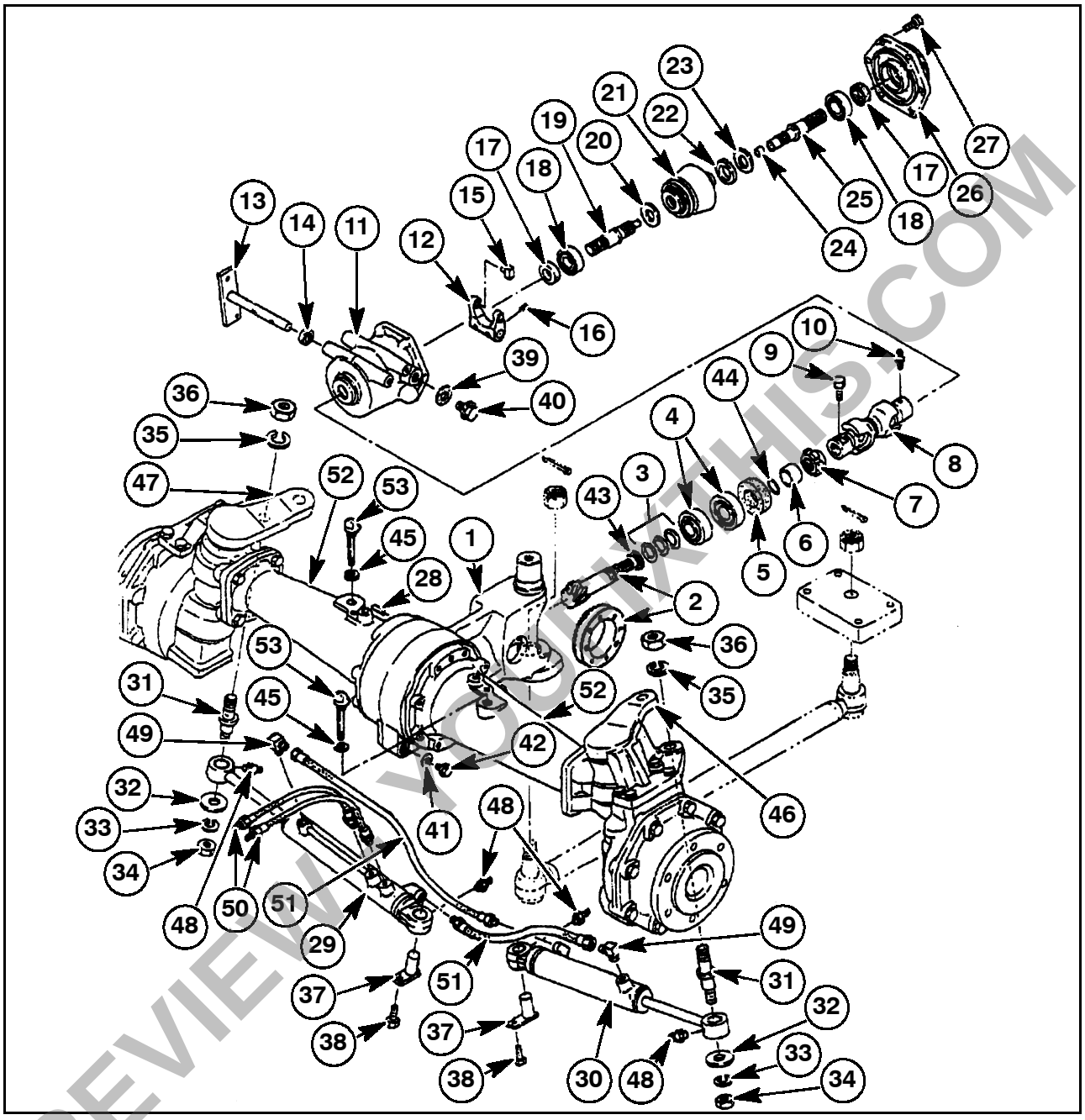

30

1. Casing Assembly
2. Drive Pinion Assembly
3. Shim
4. Tapered Roller Bearing
5. Oil Seal
6. Collar
7. Nut
8. Joint
9. Bolt
10. Grease Nipple
11. Casing
12. Shifter Fork
13. Shift Arm
14. Oil Seal
15. Block
16. Bolt
17. Oil Seal
18. Ball Bearing
19. Drive Shaft
20. Thrust Washer
21. Clutch Assembly
22. Thrust Washer
23. Thrust Washer
24. Bushing
25. Shaft
26. Seal Cover
27. Bolt
28. Pin
29. R.H. Cylinder Assembly
30. L.H. Cylinder Assembly
31. Pin
32. Spacer
33. Spring Washer
34. Nut
35. Spring Washer
36. Nut
37. Pin
38. Bolt
39. Seal Washer
40. Plug
41. Seal Washer
42. Bolt
43. Thrust Washer
44. O ring
45. Seal Washer
46. L.H. Arm
47. R.H. Arm
48. Grease Nipple
49. Adapter
50. Hose, 500 mm
51. Hose, 420 mm
52. Shaft Housing
53. Dipstick

Download full manual at youfixthis.com

MINIMUM HARDWARE TIGHTENING TORQUES

IN FOOT POUNDS (NEWTON-METERS) FOR NORMAL ASSEMBLY APPLICATIONS

METRIC HARDWARE AND LOCKNUTS

NOMINAL SIZE	CLASS 5.8		CLASS 8.8		CLASS 10.9		LOCKNUT CL.8 W/CL8.8 BOLT
	UNPLATED	PLATED W/ZnCr	UNPLATED	PLATED W/ZnCr	UNPLATED	PLATED W/ZnCr	
M4	15* (1.7)	19* (2.2)	23* (2.6)	30* (3.4)	33* (3.7)	42* (4.8)	16* (1.8)
M6	51* (5.8)	67* (7.6)	79* (8.9)	102* (12)	115* (13)	150* (17)	56* (6.3)
M8	124* (14)	159* (18)	195* (22)	248* (28)	274* (31)	354* (40)	133* (15)
M10	21 (28)	27 (36)	32 (43)	41 (56)	45 (61)	58 (79)	22 (30)
M12	36 (49)	46 (63)	55 (75)	72 (97)	79 (107)	102 (138)	39 (53)
M16	89 (121)	117 (158)	137 (186)	177 (240)	196 (266)	254 (344)	97 (131)
M20	175 (237)	226 (307)	277 (375)	358 (485)	383 (519)	495 (671)	195 (265)
M24	303 (411)	392 (531)	478 (648)	619 (839)	662 (897)	855 (1160)	338 (458)

NOTE: Torque values shown with * are inch pounds.

IDENTIFICATION
HEX CAP SCREW AND CARRIAGE BOLTS
CLASSES 5.6 AND UP

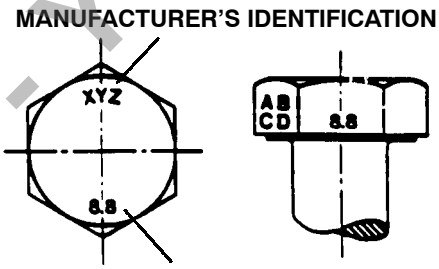

HEX NUTS AND LOCKNUTS
CLASSES 05 AND UP

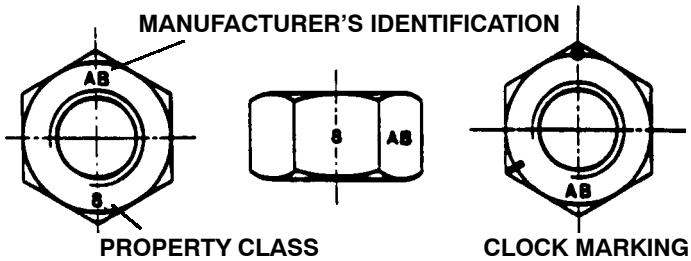

PREVIEW - YOUFIXTHIS.COM

Download full manual at youfixthis.com

TROUBLESHOOTING

PROBLEM	POSSIBLE CAUSE	CORRECTION
Engine does not develop full power	Clogged air cleaner	Inspect and replace air cleaner if necessary
	Fuel line obstructed	Check for crimped fuel line. Inspect fuel filter for cleanliness
	Improper injection timing	Repair/ replace components as required
	Improper nozzle injection pressure and angle	Check injection timing Inspect for proper injection pressure an angle
	Low cylinder compression	Check engine compression
	Insufficient fuel injection	Repair at authorized shop
	Improper valve lash adjustment	Adjust valves to correct tolerances
	Burned, worn or sticking valves	Inspect and replace as necessary
	Blown head gasket	Replace head gasket
	Worn or sticking piston rings	Overhaul as necessary
	Faulty engine stop solenoid	Replace stop solenoid
Low oil pressure	Engine oil level low	Fill to proper level
	Wrong grade of oil	Replace with correct grade oil
	Clogged oil pump filter	Change oil and filter
	Faulty oil pressure relief valve	Replace relief valve
	Worn oil pump drive shaft gears, or broken oil pipe	Inspect oil system and components. Replace defective components
	Excessive main or connecting rod bearing clearances	Replace bearings or shaft if necessary
	Oil pump axial clearance not properly set	Check pump clearance and shim as needed to proper tolerance
Engine will not stop	Faulty engine stop solenoid	Replace the stop solenoid
	Faulty starter switch	Replace starter switch
Low cylinder compression	Burned, worn or sticking valves	Replace valves
	Bent valve stem	Replace valves
	Broken or weak valve spring	Replace valve spring
	Blown cylinder head gasket	Replace head gasket
	Worn or sticking piston rings	Replace piston rings
	Scored piston	Replace piston
Poor engine idling	Improper injection timing	Correct the injection timing
	Air in injection pump	Purge air from the system
	Improper governor adjustment	Adjust the governor

PREVIEW - YOUFIXTHIS.COM
Download full manual at youfixthis.com

SPECIFICATIONS

	Model TC29D—Hydrostatic/Gear	Model TC33D—Hydrostatic/Gear
ENGINE		
Type	Diesel	Diesel
Engine Gross Horsepower	21.6 kw (29)	24.6 kw (33)
Cylinders	3	3
Bore	84 mm (3.31″)	84 mm (3.31″)
Stroke	80 mm (3.15″)	90 mm (3.54″)
Displacement	1.33 L (81.2 cu. in.)	1.50 L (91.3 cu. in.)
Compression Ratio	22.7:1	22.2:1
Firing Order	1-2-3	1-2-3
Low Idle Speed	1000 RPM	1000 RPM
Maximum Speed:		
High Idle	3040 RPM	3040 RPM
Rated	2800 RPM	2800 RPM
Valve Clearance (Cold):		
Intake	0.20 mm (0.008″)	0.20 mm (0.008″)
Exhaust	0.20 mm (0.008″)	0.20 mm (0.008″)
CAPACITIES		
Fuel Tank	27.6 liters/ 7.3 U.S. gals.	27.6 liters/ 7.3 U.S. gals.
Cooling System	4.0 liters/ 4.2 U.S. qts.	4.0 liters/ 4.2 U.S. qts.
Engine Crankcase:		
With Filter	4.0 liters/ 4.2 U.S. qts.	4.0 liters/ 4.2 U.S. qts.
Rear Axle & Transmission (Includes Hydraulics)		
Gear	32.5 liters/ 8.6 U.S. gals.	32.5 liters/ 8.6 U.S. gals.
HST	33.3 liters/ 8.8 U.S. gals.	33.3 liters/ 8.8 U.S. gals.
Power Steering	1.6 liters/ 1.7 U.S. qts.	1.6 liters/ 1.7 U.S. qts.
Front Axle Final Reduction	0.8 liters/ 0.85 U.S. qts.	0.8 liters/ 0.85 U.S. qts.
Differential Gear Case	1.4 liters/ 1.5 U.S. qts.	1.4 liters/ 1.5 U.S. qts.

PREVIEW - YOUFIXTHIS.COM

Download full manual at youfixthis.com

ENGINE OVERHAUL

ENGINE DISASSEMBLY

1. Turn coolant tap bolt, 1, counterclockwise to drain fluid. Remove the radiator assembly. See “Radiator Removal”, discussed later in this section.

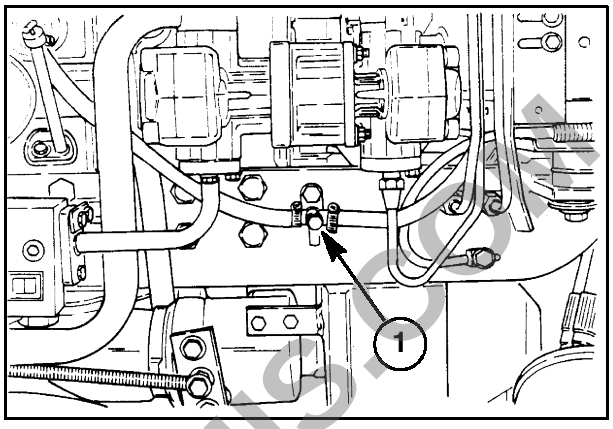

4

2. Remove the air cleaner assembly, 1, along with the air cleaner hoses.

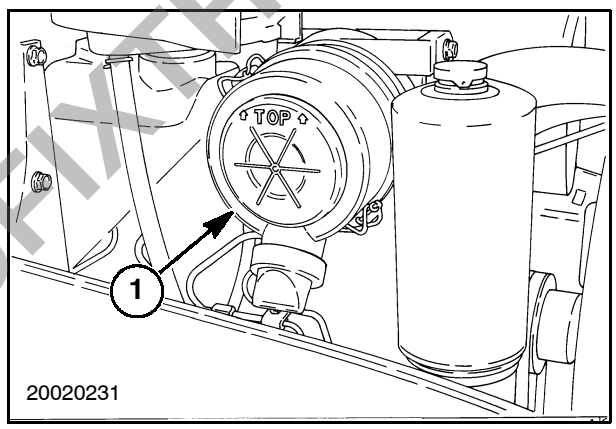

5

3. Remove bolts, 1, for final removal of air cleaner assembly.

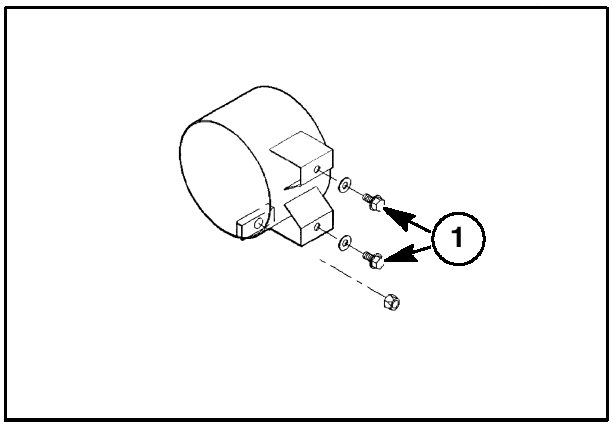

6

PREVIEW - YOUFIXTHIS.COM

Download full manual at youfixthis.com

LUBRICATION AND MAINTENANCE

Op. 00 400

LUBRICATION

Adequate lubrication and maintenance on a regular schedule is vital to maintaining your equipment. To ensure long service and efficient operation, follow the lubrication and maintenance schedules outlined in this manual. The use of proper fuels, oils, grease and filters, as well as keeping the systems clean, will also extend machine and component life.

IMPORTANT: *Always use genuine* ***New Holland*** *replacement parts, oils and filters to ensure proper operation, filtration of engine and hydraulic systems. See your* ***New Holland*** *dealer for additional oil quantities.*

RECOMMENDED LUBRICANTS AND COOLANTS

Lubricant	Location Used	Type and Description	Part Number	Quart or Liter	Gallon or Tube
Oil	Engine and Pivot Points without Grease Fittings, Chains	SAE 30 API CF-2SJ	9613286	1Qt.	
		SAE 30 API CF-2SJ	9613289		2.5 Gal.
		SAE 30 API CF-2SJ	9613366*	4 L	
		5W-30 API SG/CD	9673589DS	1 Qt.	
		5W-30 API SG/CD	9624590*	4 L	
		10W-30 API SG/CD	9613313	1 Qt.	
		10W-30 API SG/CD	9613314		2.5 Gal.
		10W-30 API SG/CD	9673508DS		5 Gal.
		10W-30 API SG/CD	9613358*	1 L	
		10W-30 API SG/CD	9613359*	4 L	
		15W-40 API CF-4	9613290	1 Qt.	
		15W-40 API CF-4	9673730DS		1 Gal.
		15W-40 API CF-4	9613303		2.5 Gal.
		15W-40 API CF-4	9613292		5 Gal.
		15W-40 API CF-4	9613350*	1 L	
		15W-40 API CF-4	9613351*	4 L	
Coolant	Engine	ESE-M97B18-D, Ethylene Glycol New Holland Spec. Coolant Concentrate	FGCC2701DS		1 Gal.
		Propylene Glycol Concentrate	FGCC2711DS		1 Gal.
Hydraulic Oil	Hydraulic System, Hydrostatic System Front Axle Oil	134D – ESN-M2C134-D New Holland Spec. Hydraulic oil	9624450		2.5 Gal.
		134D – ESN-M2C134-D	9624451		5 Gal.
		134D – ESN-M2C134-D	9613367*	4 L	
		134D – ESN-M2C134-D	9624785*	10 L	
Hydraulic Oil	Optional, Multi-Seasonal Use, Recommended for both Low and High Temperature extremes.	F200	86523625DS	1 Qt.	
		F200	86523626DS		5 Gal.
		F200	86509446*	20 L	
Gear Oil	Gearboxes	80W90 EP Gear Oil API GL5	9613295	1 Qt.	
		80W90 EP Gear Oil API GL5	9613294		2.5 Gal.
		80W90 EP Gear Oil API GL5	9613375*	5 L	
		85W140 EP Gear Oil API GL5	9613297	1 Qt.	
		85W140 EP Gear Oil API GL5	9613296		2.5 Gal.
		85W140 EP Gear Oil API GL5	9613376*	4 L	
Grease	All Grease Fittings	Lithium base EP high temperature	9861804DS		Tube
		Lithium base EP high temperature	9861804CDS*		Tube
Brake Fluid		Mineral Based Oil	1QM6C34A or 86541699DS	1 Qt.	

**** NOTE:*** *Canada Part Numbers ONLY.*

Download full manual at youfixthis.com

PREVIEW - YOUFIXTHIS.COM

SECTION 10 - ENGINE

BOOK 1 - 87036757

Chapter 1 - Engine Systems (Continued)

CONTENTS

Section	Description	Page
	Engine Reassembly	35
10 103	Crankshaft and Bearing Holder Reassembly	35
	Rear Oil Seal and Backplate Assembly	35
	Flywheel	36
10 105	Pistons and Connecting Rods	36
	Oil Suction Pipe and Suction Strainer	37
	Oil Sump	37
10 106	Timing Gear Cover, Timing Gears, and Camshaft Assembly	38
10 106	Idler Gear, Oil Pump, and Injection Timing	38
	Timing Gear Cover	38
	Crankshaft Pulley	39
	Fuel Injection Pump Assembly	39
	Power Steering Pump	39
10 101	Head Gasket Selection	40
	Head Gasket Selection Chart	40
	Cylinder Head Assembly	40
10 106	Valve Clearance Adjustment	41
	Valve Cover	42
	Water Pump and Cooling Fan Assembly	42
	Air Intake Manifold Assembly	42
	External Oil Tube	43
	Glow Plug and Connector	43
	Fuel Injector	43
10 218	Fuel Piping	44
	Alternator and Temperature Sender Switch	44
	Exhaust Manifold	44
	Engine Lubrication System	45
10 304	Description	45
10 206	Oil Filter	48
10 304	Oil Pump	48
	Engine Oil Pressure Check	50
	Oil Pressure Relief Valve	51
	Oil Consumption	51
	Cooling System	52
10 400	Description and Operation	52
	Maintenance	54
	Coolant	54
	Radiator Cap	54
10 402	Thermostat	55
10 402	Water Pump	55
10 414	Cooling Fan	55

PREVIEW - YOUFIXTHIS.COM

Download full manual at youfixthis.com

	Engine Reassembly	35
10 103	Crankshaft and Bearing Holder Reassembly	35
	Rear Oil Seal and Backplate Assembly	35
	Flywheel	36
10 105	Pistons and Connecting Rods	36
	Oil Suction Pipe and Suction Strainer	37
	Oil Sump	37
10 106	Timing Gear Cover, Timing Gears, and Camshaft Assembly	38
10 106	Idler Gear, Oil Pump, and Injection Timing	38
	Timing Gear Cover	38
	Crankshaft Pulley	39
	Fuel Injection Pump Assembly	39
	Power Steering Pump	39
10 101	Head Gasket Selection	40
	Head Gasket Selection Chart	40
	Cylinder Head Assembly	40
10 106	Valve Clearance Adjustment	41
	Valve Cover	42
	Water Pump and Cooling Fan Assembly	42
	Air Intake Manifold Assembly	42
	External Oil Tube	43
	Glow Plug and Connector	43
	Fuel Injector	43
10 218	Fuel Piping	44
	Alternator and Temperature Sender Switch	44
	Exhaust Manifold	44
	Engine Lubrication System	45
10 304	Description	45
10 206	Oil Filter	48
10 304	Oil Pump	48
	Engine Oil Pressure Check	50
	Oil Pressure Relief Valve	51
	Oil Consumption	51
	Cooling System	52
10 400	Description and Operation	52
	Maintenance	54
	Coolant	54
	Radiator Cap	54
10 402	Thermostat	55
10 402	Water Pump	55
10 414	Cooling Fan	55
	Cooling System Overhaul	56
10 406	Radiator	56
10 402	Water Pump	60
10 402	Thermostat	62
	Troubleshooting	64
	Specifications	68
	Metric Bolt Torque Specifications	76
	Special Tools	77

PREVIEW - YOUFIXTHIS.COM

Download full manual at youfixthis.com

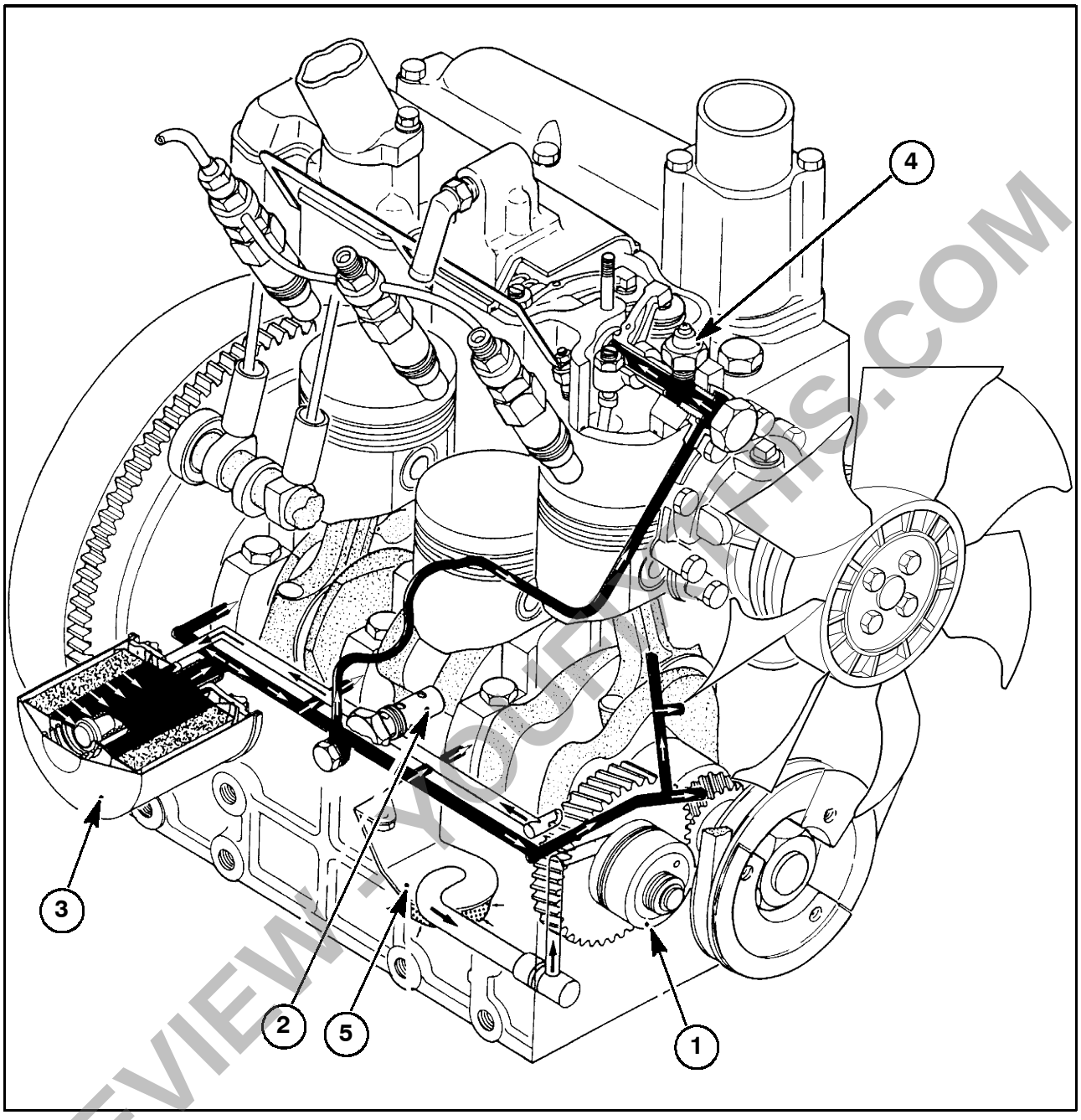

106

1. Oil Pump
2. Relief Valve
3. Oil Filter
4. Oil Pressure Switch
5. Suction Strainer

PREVIEW - YOUFIXTHIS.COM

Download full manual at youfixthis.com

Op. 10 244

FUEL VARIATION MECHANISM

As well as pressurizing the fuel oil, the injection pump also functions to vary the fuel injection quantity.

A control sleeve, 1, is installed around the plunger barrel, 2, and a flange, 3, on the bottom of the plunger, 4, is inserted into a groove in the control sleeve. Teeth on the control sleeve are engaged with teeth on the control rack, 5, so that movement of the control rack results in rotation of the plunger and, consequently, variation of the fuel injection quantity.

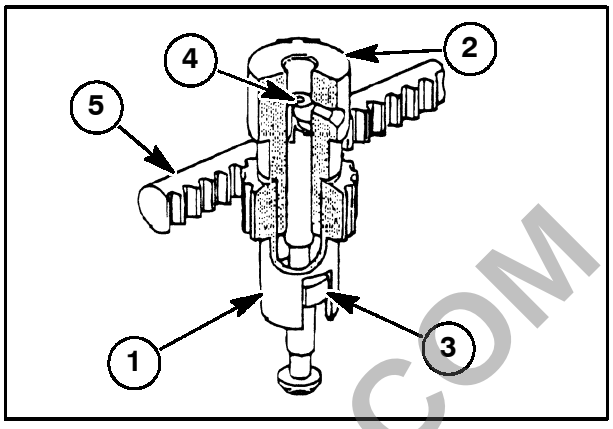

3

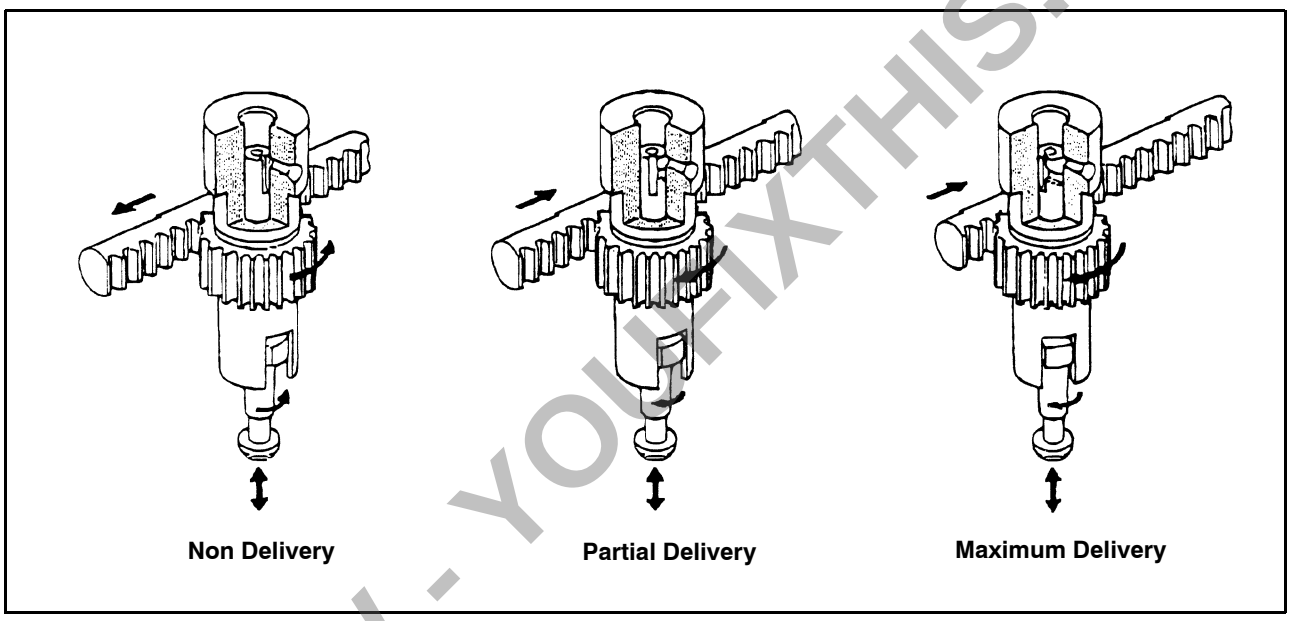

4

PREVIEW - YOUFIXTHIS.COM

Download full manual at youfixthis.com

INSPECTION

1. Inspect the pressure plates for scoring, cracks, or signs of overheating. Minor imperfections may be removed by resurfacing the pressure plate surface.
2. Inspect the release levers, 12, for excess wear or damage.
3. Inspect the release lever and link pivot pins for excess wear or damage.
4. Inspect the clutch disc lining for excess wear. Replace the clutch disc if the lining is worn to less than 0.3 mm (0.012″) from the top of the rivet heads.
5. Inspect the clutch linings for signs of overheating, scoring, or oil impregnation in the lining.
6. Inspect the hub spline for excess wear.
7. Inspect the cushioning springs for signs of wear or damage.

NOTE: *Flywheel surface may be machined down a maximum of 1.27 mm (0.050″).*

ASSEMBLY

1. Install one diaphragm spring, 7, (dome side away from flywheel) in the clutch outer cover, 8.
2. Install the PTO pressure plate, 6, in the clutch outer cover.
3. Install the PTO clutch disc, 5, with long side of hub away from flywheel.
4. Install the clutch inner cover, 4.
5. Install one diaphragm spring, 3, (dome side away from flywheel) in the clutch cover.
6. Install the transmission pressure plate, 2, in the clutch cover.
7. Install release lever link, and pin assemblies, 11, 12, 13, and 14.
8. Install the three PTO clutch release bolts, 15, into the transmission pressure plate (finger tight only).
9. Install the transmission clutch disc, 1, between the flywheel and the pressure plate with long side of hub away from flywheel.
10. Position the clutch pressure plate assembly on the flywheel and install the six mounting bolts.

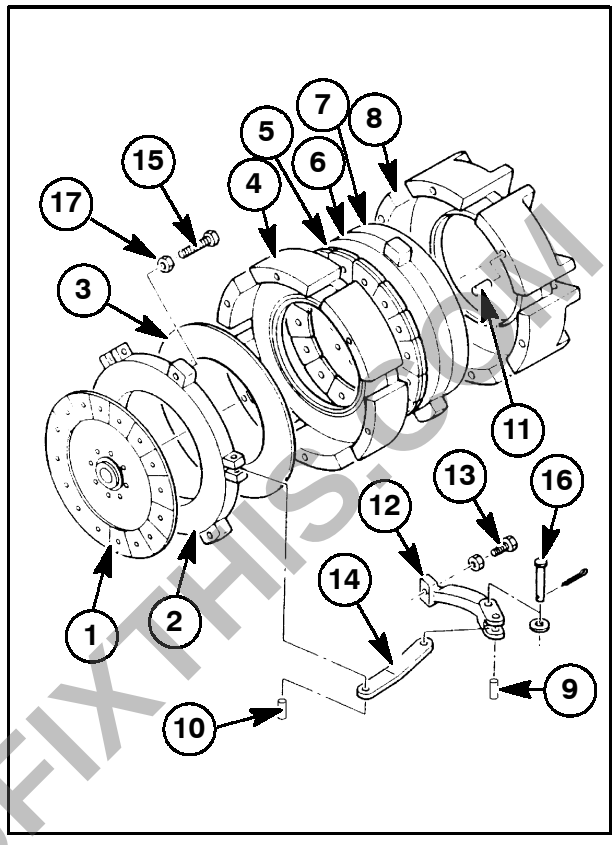

21

1. Clutch Disc Assy. (Transmission)
2. Pressure Plate
3. Diaphragm Spring
4. Clutch Cover—Inner
5. Clutch Disc Assy. (PTO)
6. Pressure Plate
7. Diaphragm Spring
8. Clutch Cover—Outer
9. Dowel Pin
10. Dowel Pin
11. Pin
12. Release Lever
13. Adjusting Bolt
14. Link
15. Adjusting Bolt
16. Pin
17. Locknut

PREVIEW - YOUFIXTHIS.COM

Download full manual at youfixthis.com

13. Connect the hydraulic suction tube, 1, system pressure tube, 2, and fluid return line, 3, to the tractor.

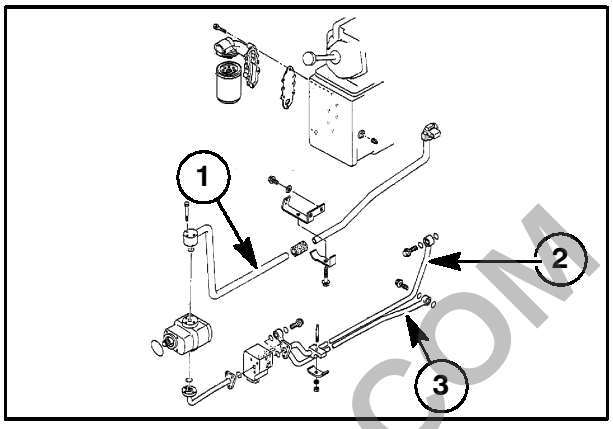

82

14. Install the steering column, 1, and shift linkage, 2, as an assembly. Install the four bolts, 3, attaching the steering column assembly to the clutch housing. DO NOT tighten the bolts at this time.
15. Connect the lower flex-joint on the shift linkage to the shift shaft.

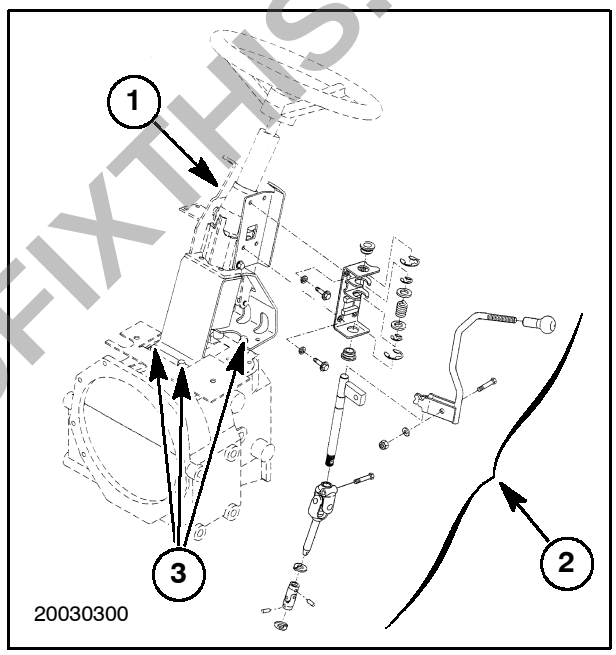

83

16. Install the roll pin, 1, and snap ring, 2, through the lower flex-joint, 3, on the shift linkage, securing the shift linkage to the shift shaft.

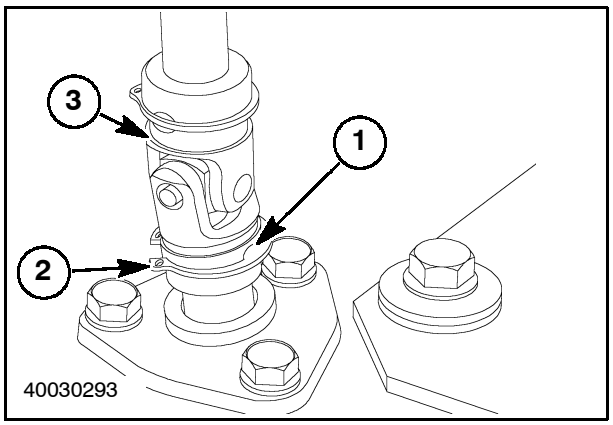

84

PREVIEW - YOUFIXTHIS.COM

Download full manual at youfixthis.com

SPECIFICATIONS

FOUR WHEEL DRIVE

Differential Pinion Gear to Pinion Shaft Clearance	0.1 mm (0.004 in.)
Differential Pinion Bear Thrust Washer Thickness	1.2 mm (0.047 in.)
Differential side Gear To Pinion Gear Backlash	0.1 - 0.15 mm (0.004 - 0.006 in.)
Drive Pinion Bearing Pre-Load	13 - 17 kg. (28.7 - 37.4 lbs.) pull
Differential Housing Pivot Trunnion to Bushing Clearance —	
Front	0.02 - 0.2 mm (0.0008 - 0.008 in.)
Maximum	0.35 mm (0.014 in.)
Rear	0.02 - 0.16 mm (0.0008 - 0.006 in.)
Maximum	0.35 mm (0.014 in.)
Front Pivot Thrust Washer Thickness	1.2 mm (0.047 in.)
Rear Pivot Thrust Washer Thickness	1.2 mm (0.047 in.)
King Pin Inclination (fixed)	10°
Chamber (fixed)	2°
Final Pinion Gear-To-Bevel Gear Backlash	0.2 - 0.4 mm (0.008 - 0.016 in.)
Front Axle Pivot End Play	0.3 mm (0.012 in.)
Maximum	0.6 mm (0.023 in.)
Front Wheel Toe-In	0 - 5 mm (0 - 3/16 in.)
Ball Joint Torque	(192 - 233 N·m) (142 - 172 ft. lbs.)
Oscillation	8°

PREVIEW - YOUFIXTHIS.COM

Download full manual at youfixthis.com

PREVIEW - YOUFIXTHIS.COM

Download full manual at youfixthis.com

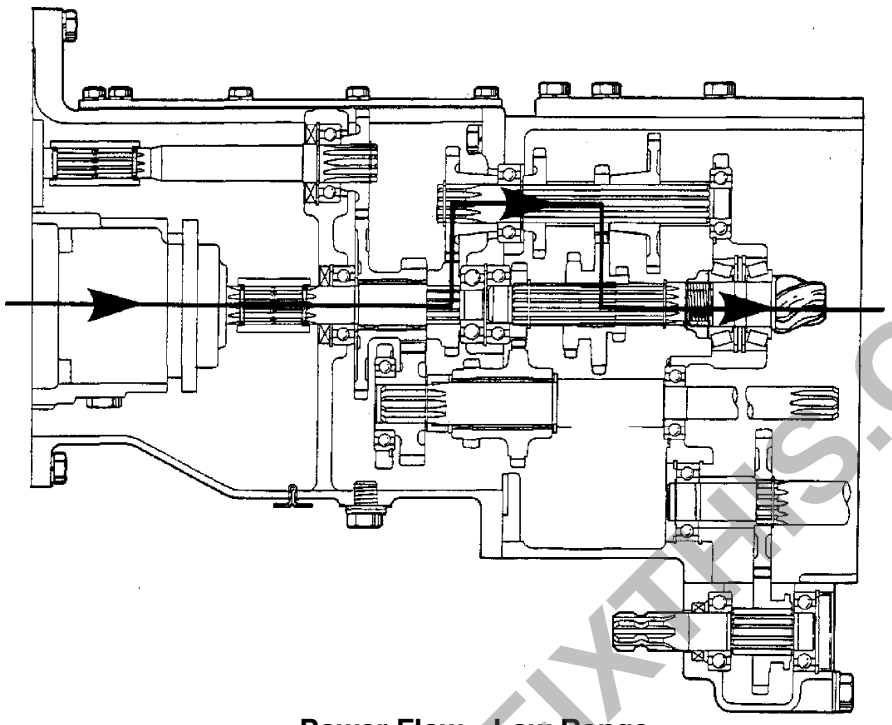

Power Flow—Low Range

77

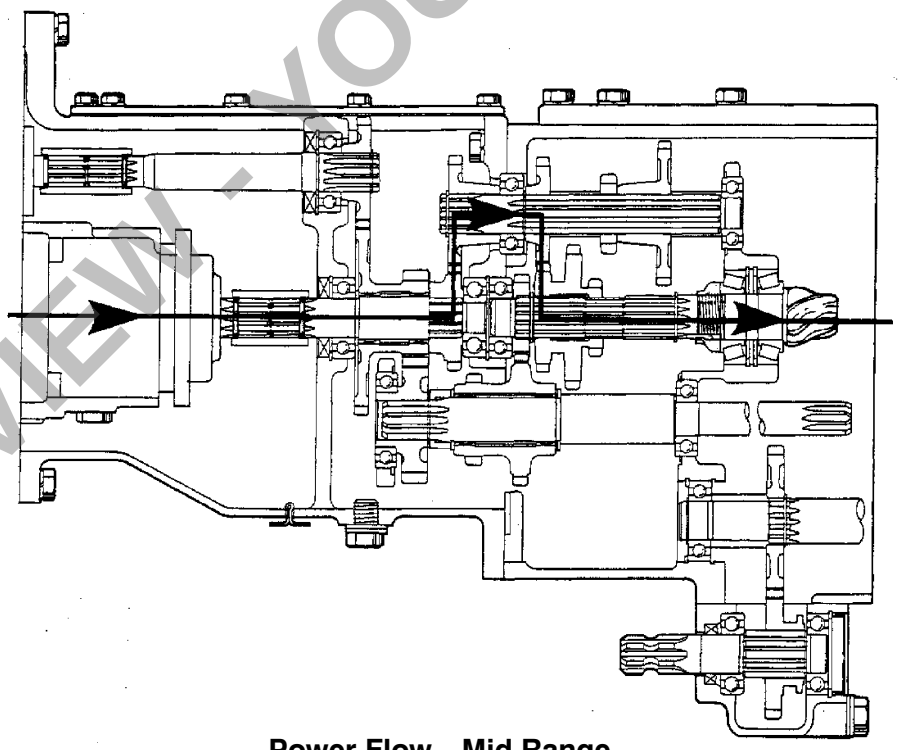

Power Flow—Mid Range

78

PREVIEW - YOUFIXTHIS.COM

Download full manual at youfixthis.com

7. Install the brake lever, 2, onto the brake cam, and secure with the retaining nut, 1. Tighten the retaining nut, 1.

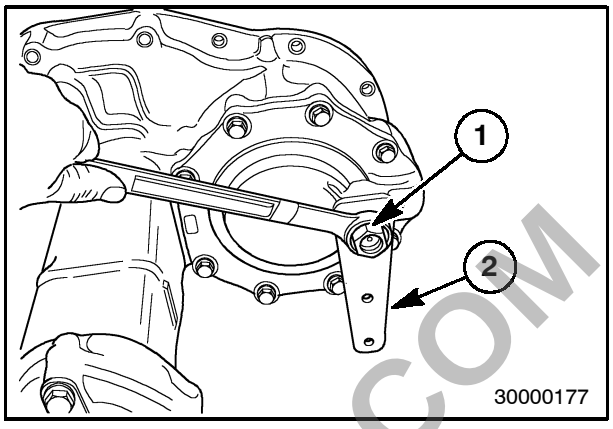

24

8. Connect the brake rod clevis, 1, to the brake arm, 2.

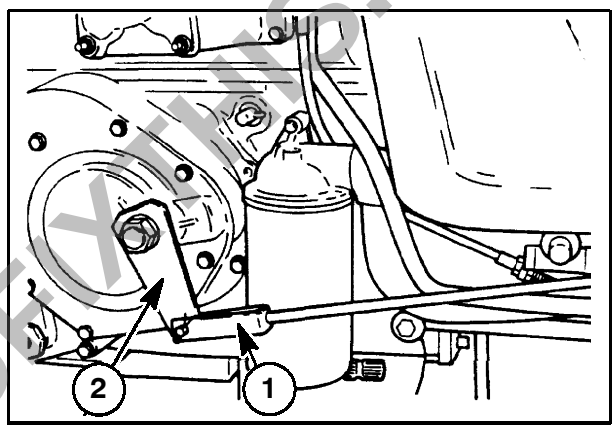

25

BRAKE ADJUSTMENT

1. Measure the brake pedal free travel, 1.
2. If adjustment is required, loosen the locknut, 2, on the brake rod, 3. Turn the brake rod, 3, and remeasure the pedal free travel, 1. When correct free travel of 35-45 mm (1.38-1.77 in.) is achieved, tighten the locknut, 2.

IMPORTANT: *Be sure to test drive the tractor to make sure the braking action on both rear wheels is equal. If necessary, adjust the outer brake rod to equalize the free travel.*

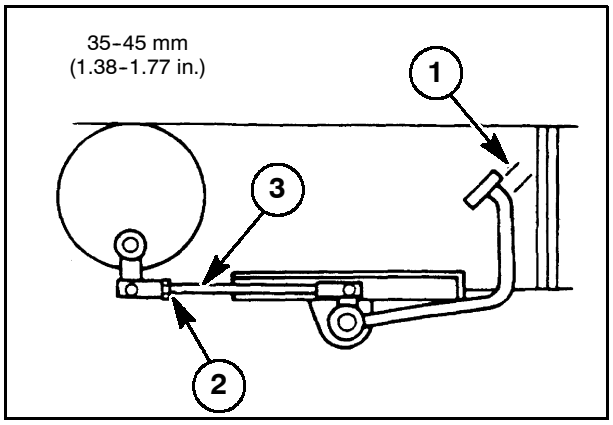

26

PREVIEW - YOUFIXTHIS.COM
Download full manual at youfixthis.com

FRONT (DOUBLE-SPOOL) REMOTE CONTROL VALVE REMOVAL

1. Remove the control valve cover-retaining bolts and remove the control valve cover, 1.
2. Disconnect the piping from the control valve. Plug and cap all openings.
3. Remove the control valve-retaining bolts and remove the control valve.

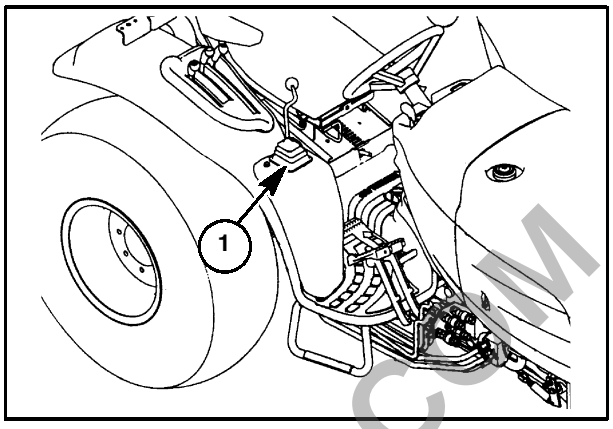

74

FRONT (DOUBLE-SPOOL) REMOTE CONTROL VALVE DISASSEMBLY

1. Loosen the joystick locknut and remove the joystick.
2. Remove the nuts, 28, and remove the handle kit (refer to Figure 74).
3. Remove cap screws, 29, and remove the clevis, 30.
4. Remove cap screws, 33, and remove the mounting plate, 34, and retainer plates, 32.

IMPORTANT: *The detent balls are under pressure and can fly out when the detent sleeve is removed. use care not to lose the detent balls during removal.*

5. Remove cap screws, 1, from the float spool. Wrap a rag around the end cap, 2, and slowly pull outward until detent balls, 8, snap out.
6. Remove the end cap, 2, float detent sleeve, 3, poppet, 6, detent spring, 7, detent balls, 8, retainer, 5, and spacer, 13.
7. Gently slide the float spool, 14, with stop cup, 12, spring, 11, washer, 10, and detent retainer, 9 , out of the valve body.

IMPORTANT: *The float spool, 14, and REGEN spool, 15, are not interchangeable and will only work in their respective bores. Ensure that the spools are inserted into the proper bores during reassembly.*

8. Remove the O rings, 16, from the grooves in the valve body.
9. Disassemble the REGEN spool, 15, in the same manner as the float spool using steps 5 through 8.
10. Remove the plug, 17, and O ring, 18.
11. Remove the load check plugs, 19, O rings, 20, springs, 21, and load check poppets, 22, from the check valve ports.
12. Remove the power beyond outlet connector, 36, with O ring, 37, backup washer, 38, and O ring, 39.
13. Remove the relief valve assembly, 23, and repair as described later in this section.

PREVIEW - YOUFIXTHIS.COM

Download full manual at youfixthis.com

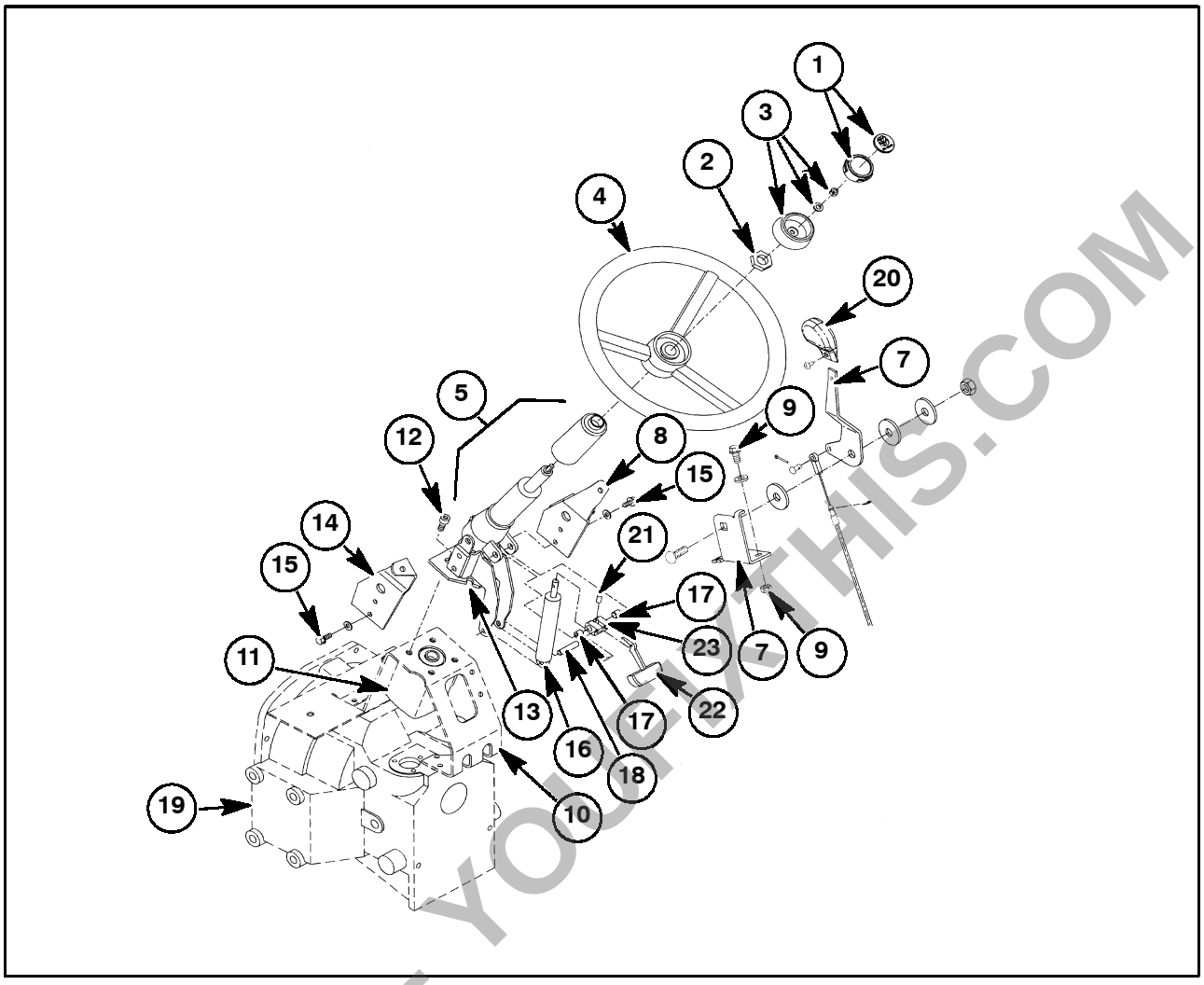

56

STEERING COLUMN ASSEMBLY AND INSTALLATION

1. If removed, install the steering column support bracket, 10, onto the clutch housing, 19, and the fuel tank onto the fire wall and steering column.
2. With the power steering motor flush, 11, against the bottom of the support bracket install the steering column, 5, with the allen head bolts, 12 and remove any support blocks.

NOTE: *The steering shaft teeth need to be aligned with the steering motor teeth.*

3. Install the gas shock, 16, by inserting dowel pin, 18, at the base of the shock and clamping the spring, 21, hinge, 23, and handle, 22, down on the top of the shock. Install allen head bolts, 17, to hold the spring, hinge, handle, and shock into the bracket on the column.
4. Install the dash console onto the firewall and support brackets on the steering column.
5. Install the throttle linkage, 7, to the right side of the steering column, 8, and stick the control lever through the console. Attach handgrip, 20, to the throttle lever.
6. Install the dash console side panels, 1 and 2, on both sides of the steering column, 5 and 6, Figure 53.
7. Install the steering wheel, 4, onto the shaft, securing with the retaining nut, 2. Install the adjustment knob, 3, for the telescoping column, 5.

PREVIEW - YOUFIXTHIS.COM

Download full manual at youfixthis.com

Op. 55 408

PARKING BRAKE SAFETY SWITCH

Description

The parking safety switch, 1, is a double-pole, single throw-style switch located on the brake control lever pivot bracket.

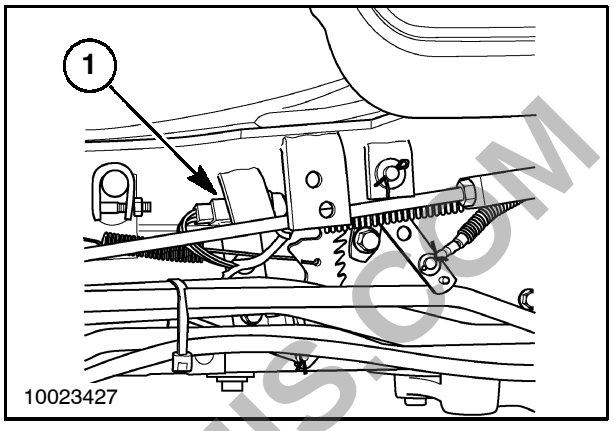

37

Parking Brake Safety Switch Testing

Use an ohmmeter to test both of the positions of the parking brake safety switch for electrical continuity.

Retracted Position (Not Shown)

1. Push the parking brake safety switch into the “retracted” (“off”) position, continuity should not exist between any of the four terminals. If continuity exists between any of the four terminals while the switch is in the “retracted” position, the switch is defective and needs replaced.

Extended Position

Using an ohmmeter, touch one of the test probes to terminal, A. Touch the other test probe to terminal, B.

1. With the parking brake safety switch in the “extended” position.
2. Observe the ohmmeter. The ohmmeter should show little or no resistance indicating that continuity exists between terminal, A, and terminal, B. If continuity does not exist between terminal A, and terminal, B, the switch is defective and needs replaced.

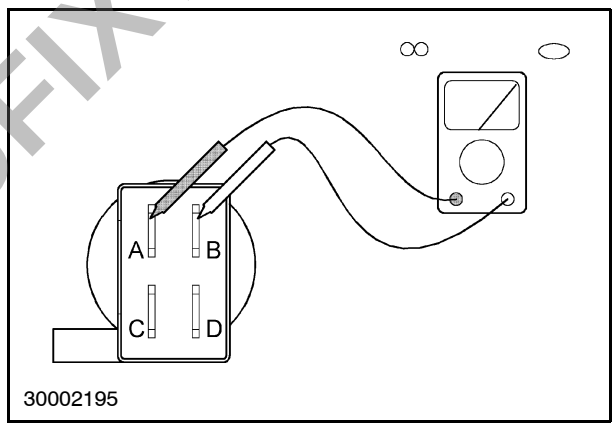

38

3. Using an ohmmeter, touch one of the test probes to terminal, C. Touch the other test probe to terminal, D.
4. Observe the ohmmeter. The ohmmeter should show little or no resistance indicating that continuity exists between terminal, C, and terminal, D. If continuity does not exist between terminal, C, and terminal, D, the switch is defective and needs replaced.

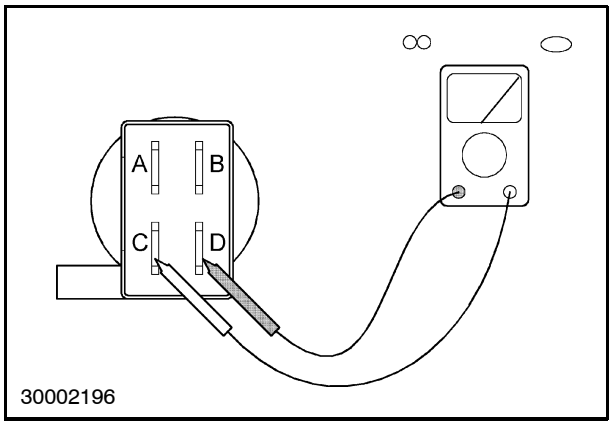

39

PREVIEW - YOUFIXTHIS.COM

Download full manual at youfixthis.com

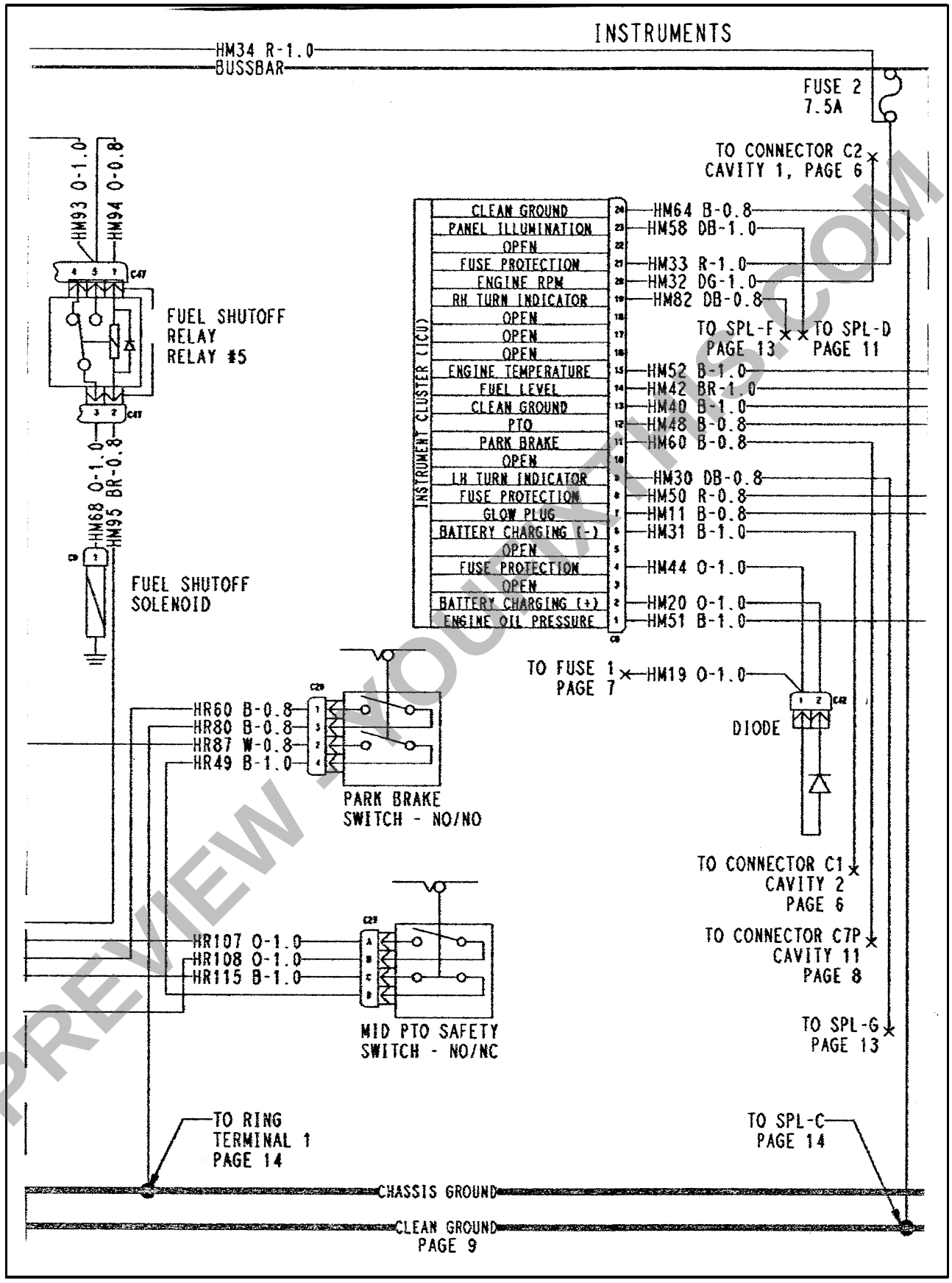

PREVIEW - YOUFIXTHIS.COM

115

Download full manual at youfixthis.com

LEFT TURN SIGNAL CIRCUIT (ALL MODELS)

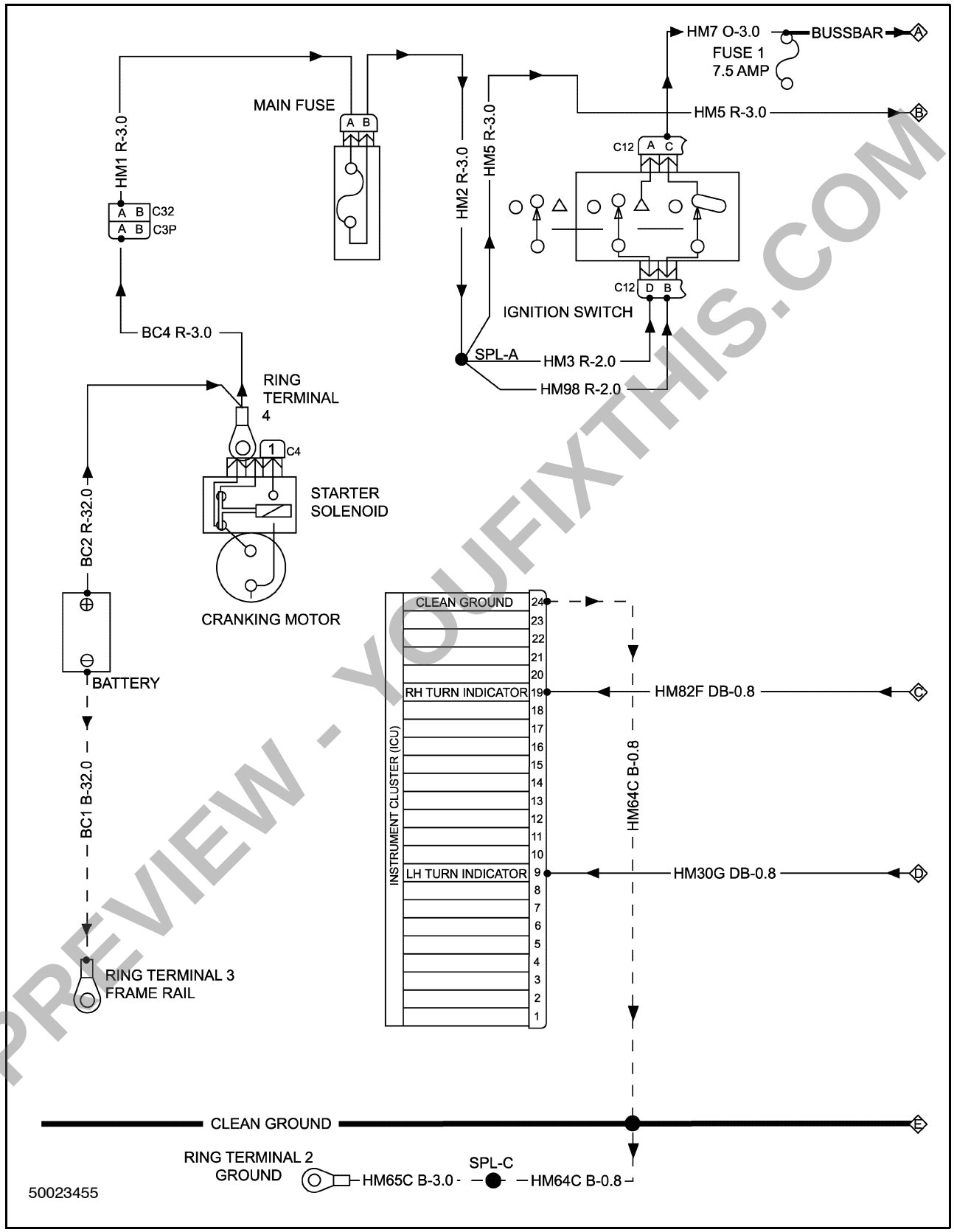

139

PREVIEW - YOUFIXTHIS.COM

Download full manual at youfixthis.com

ALTERNATOR SPECIFICATIONS

Manufacturer	Mitsubishi
Model	A007T03877
Nominal Output	12 Volt—40 Amp
Polarity	Negative ground
Weight	3.7 kg (8.2 lbs)
Rotational Direction (Viewed from pulley)	Clockwise
Load Characteristics	
Terminal voltage	13.5V
Current	30 Amp Min.
rpm	2500
Brush Length	
Original	18.5 mm (0.728″)
Limit	5 mm (0.20″)
Brush Spring Tension	
Original	470 – 590 g (1.036 – 1.130 lbs)
Limit	270 g (0.60 lbs)
Bearing	
Rear	ECSC8
Front	6303DDG
Slip Ring Diameter	
Original	22.7 mm (0.894″)
Limit	22.1 mm (0.871″)
Field Coil Resistance	2.8 Ohms @ 20° C
Adjusting Voltage	14.4–15.0 V @ 5000 rpm

PREVIEW - YOUFIXTHIS.COM

Download full manual at youfixthis.com

PREVIEW ONLY

You're viewing 25 of 712 pages

The full manual includes:

- All 712 pages, complete
- Searchable PDF (find any keyword)
- No watermarks
- Instant download
- Print-ready quality

GET FULL MANUAL NOW

New Holland TC29D, TC33D Repair Manual

Scan or click anywhere
youfixthis.com

Click anywhere on this page to get the full manual